AMF REECE

Better Ideas, Better Made

SERIES S-38AP

LOCKSTITCH POCKET WELTING MACHINE

PARTS & SERVICE MANUAL

PART NUMBER 97.0038.0.003

AMF REECE®

Series 38AP

Lockstitch Pocket Welting Machines

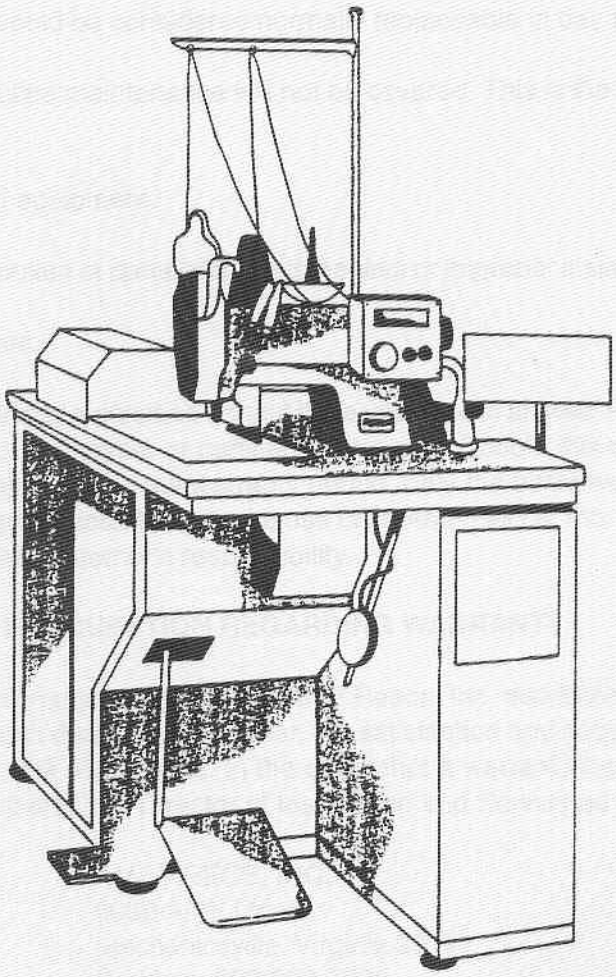

P/N 97.0038.0.003

AMF REECE
Better Ideas, Better Made

LIMITED WARRANTY ON NEW AND RECONDITIONED EQUIPMENT

What is covered:

90 day limited warranty on service labor due to defects in workmanship or materials.

1 year on major component parts due to defects in materials. Any new or reconditioned part which a customer feels is defective, must be returned freight prepaid to AMF Reece, Inc. for inspection. If, upon inspection the part is determined to be defective, AMF Reece, Inc. will replace it at no charge to the customer.

Warranty period shall begin on completed installation date.

What is not covered:

Consumable parts which would be considered normally replaceable in day to day operations.

Normal adjustment and routine maintenance will not be covered. This is the sole responsibility of the customer.

Cleaning and lubrication of equipment.

Parts found to be altered, broken or damaged due to neglect or improper installation or application.

Shipping or delivery charges.

Customers may choose to install a machine without the assistance of an AMF Reece, Inc. technician (either an AMF Reece, Inc. employee, or certified contractor). Should this occur and should the customer then require service during the warranty period, *only the defective part will be covered by the warranty.* Any charges associated with the use of an AMF Reece, Inc. technician to replace the defective part will be the customer's responsibility.

WHAT TO DO IF THERE IS A QUESTION REGARDING WARRANTY

If a machine is purchased through an authorized AMF Reece, Inc. distributor, warranty questions should first be directed to that distributor. However, the satisfaction and goodwill of our customers are of primary concern to AMF Reece, Inc. In the event that a warranty matter is not handled to your satisfaction, please contact the Director of Installation and Service as noted below.

AMF REECE, INC.
8080 AMF Drive
Mechanicsville, Virginia 23111
Service: 800-367-7332
Parts: 800-237-3323

CONTENTS

1. Description

Series 38AP…for the cycle sewing, attaching flaps and welting for slant pocket

2. Indication of Model Plate

(example) S38AP−C10−175S−22J−400/SA03

① ② ③ ④ ⑤ ⑥ ⑦ ⑧ ⑨ ⑩ ⑪ ⑫

① Symbol of Series

② Class No.

③ Classification of function

④ Kind of Rack Leg
A: Adjustable Foot
C: Caster

⑤ Needle Bite Size
10: 10mm
12: 12mm
14: 14mm

⑥ Size of Patch Guide(L)
175: 17.5mm
220: 22.0mm

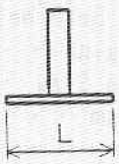

⑦ Kind of Welting
S: Single welting
D: Double welting
T: Single and double welting

⑧ Indication of Operating Voltage
22: 220V
38: 380V

⑨ Phase, Frequency and Motor
J: 3 phase, 60 Hz positioner motor
C: 3 phase, 50 Hz positioner motor

⑩ Language of Panel Indication
1: English
4: Japanese

⑪ Indication of Special Device
(example)
01: Sandwich-type Slide Plate

⑫ Indication of Stacker
SA03: Air Ejector
SA09: Trouser Panel Stacker
SA12: Work Remover

3. General Specifications

Model	: Series 38AP
Application	: To welt the fabric for hip pocket, side pocket and welt pocket of a vest by parallel and slant sewing.
Welting	: Single or double welt pocket with a flap or no flap by parallel or slant sewing.
Length of welting	: Standard: 40～180mm(parallel), 50～180mm(slant) Option: 220mm max. 20mm min.
Memory of size	: 4 types Cycle sewing is possible.
Bite Size	: Standard: 10,12mm Option: 14, 16, 18, 20mm
Sewing type	: Sewing type can be changed by Rotary Switch(FLAP) on Control Panel. ① To welt with no flap by parallel sewing continuously. ② To alternate between welting with no flap and with the right one by parallel sewing. ③ To welt with right or left flap by parallel sewing continuously. ④ To alternate between welting with right and left flap by parallel sewing. ⑤ To welt with no flap by slant sewing continuously. ⑥ To welt with the right or left flap by slant sewing continuously. ⑦ To alternate between welting with the right and left flap by slant sewing. ⑧ To alternate between welting with no flap by left slant sewing and with no flap by right slant sewing. ⑨ To perform the cycle sewing with the fixed length flap and the triangled flap by parallel sewing.
Attaching flap	: Machine begins to operate after Optical Sensor detects the flap at the sewing start and stops at the sewing finish automatically.
Tab Knife	: Self-adjusting according to the sewing length. (Adjust the angle of Tab Knife. In the alternate slant sewing, Tab Knife do not operate automatically.)
Dimensions	: Width: 75cm(not with Stacker) Length: 14.5cm Height: 182cm(including Thread Stand)
Weight	: 350kg(including Sewing Head and Stacker)
Sewing Head	: LT2-B833(2-needle lockstitch machine with Center Knife)
Stitch type	: ISO(301·301)
Sewing speed	: Parallel sewing: 2,000s.p.m. : Slant sewing(difference): 1,000s.p.m.
Needle to be used	: Schmetz MT×190- #100
Material to sewn	: light～medium-heavy
Feed	: Numeral Control type with I/O checking function using stepping motor
Control system	: by micro-computer, contactless type
Power Supply	: Standard: 3 phase, 200V, 50/60 Hz Power consumption: 700W
Air supply	: Operating pressure: 0.5MPa(5kgf/cm²) Air consumption: 12ℓ/min.

※ Manual Switch is standard; and Knee Switch is optional.

4. Installation

4-1 Unpacking

After unpacking carefully, check the damage on each parts of machine.

4-2 Installation

Adjust the height and level with 4 Casters.

4-3 Removing Shipping Lock

Carriage is fixed by Shipping Locks(A) not to move in transport. Loosen Screws(B), and remove Shipping Locks(A).

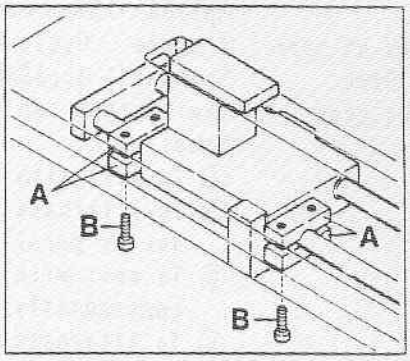

4-4 Connection of Power Cords

Connect red, black and white cords to the power supply system of the factory (AC 200V). Green cord is an earth line. Connect the line correctly.

Note: A machine may malfunction because of an electric noise, if you do not connect it correctly.

4-5 Connection of Air System

Connect Air Supply Horse with Coupler. Fix Horse Band without fail. Set the air pressure to 0.5MPa (5kgf/cm²) as illustrated right.

Air supply pressure must be over 0.6MPa(6kgf/cm²).

Regulator and Oil Mist Separator can drain water and oil automatically.

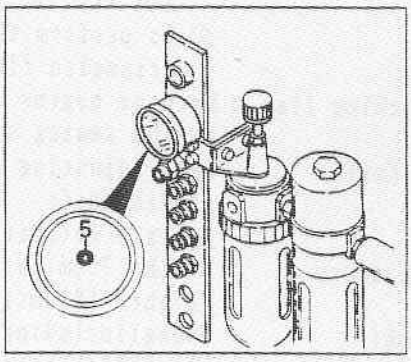

4-6 Lubrication

Remove Oil Seal Plug(A). Supply Oil Reservoir with oil up to the mark in Oil Gauge Window(B). Add oil before decreasing under the window. When operating a machine, press Lubrication Button(C) to the white line, and turn it to the arrow direction. When stopping the operation, turn it back to the home position. Supply Oil Cups(D) with oil.

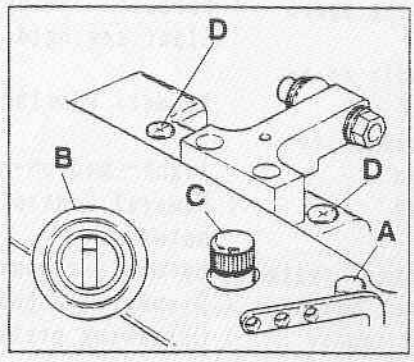

☆ Lubricating Rotary Hook

Pull out Oil Gauges(D). Supply oil up to the mark on the gauge through the gauge holes.

※ When oil decreases to the tip of the gauge, the lubricating to Rotary Hook stops.

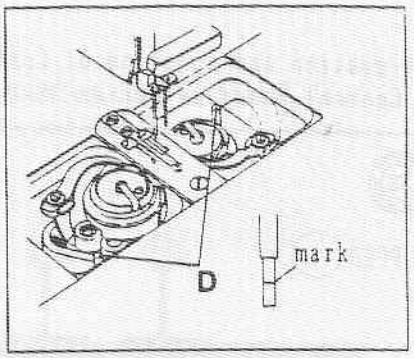

☆ Adjusting Oil Supply to Rotary Hook

Adjust the oil supply by turning Screws(E) to the base line of Rotary Hook.

※ When changing Rotary Hook, adjust the oil supply to Rotary Hook as shown in the illustration without fail.
(The oil splashed from Rotary Hook should look like the illustration below after 10 seconds.)

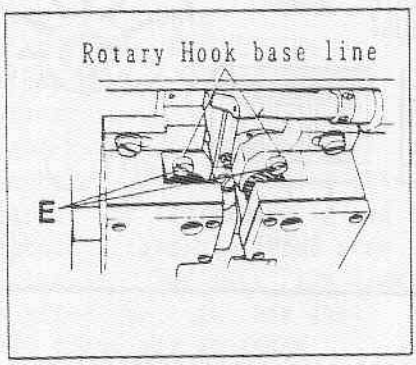

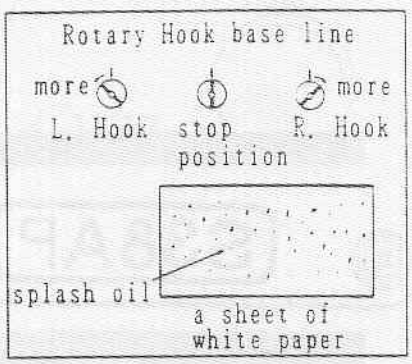

4-7 Sewing Machine Rotation

When Carriage stays at the hindmost position, press Switch S4 on Lower Switch Panel Board. Check that Pulley rotates counterclockwise. When it rotates clockwise, shift the switch in Motor Control Box to ↺.

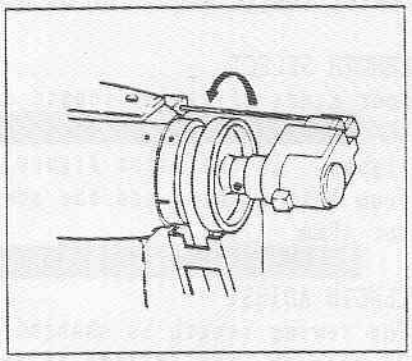

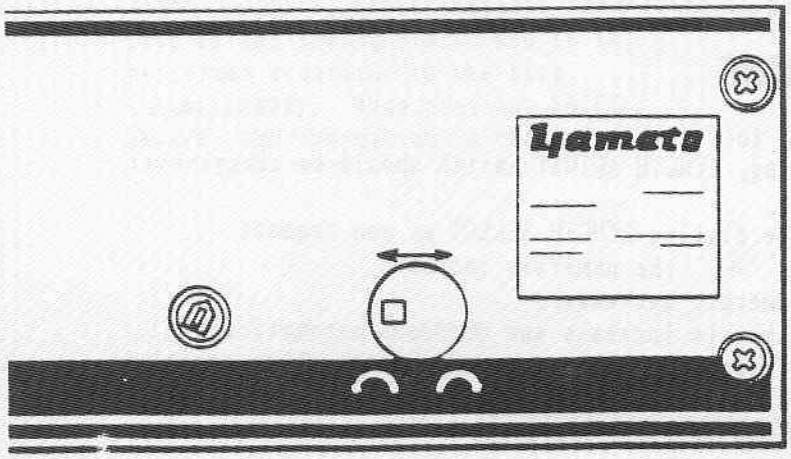

5. Designation and function of Control Panel and Control Board

5-1 Control Panel of Series 38AP

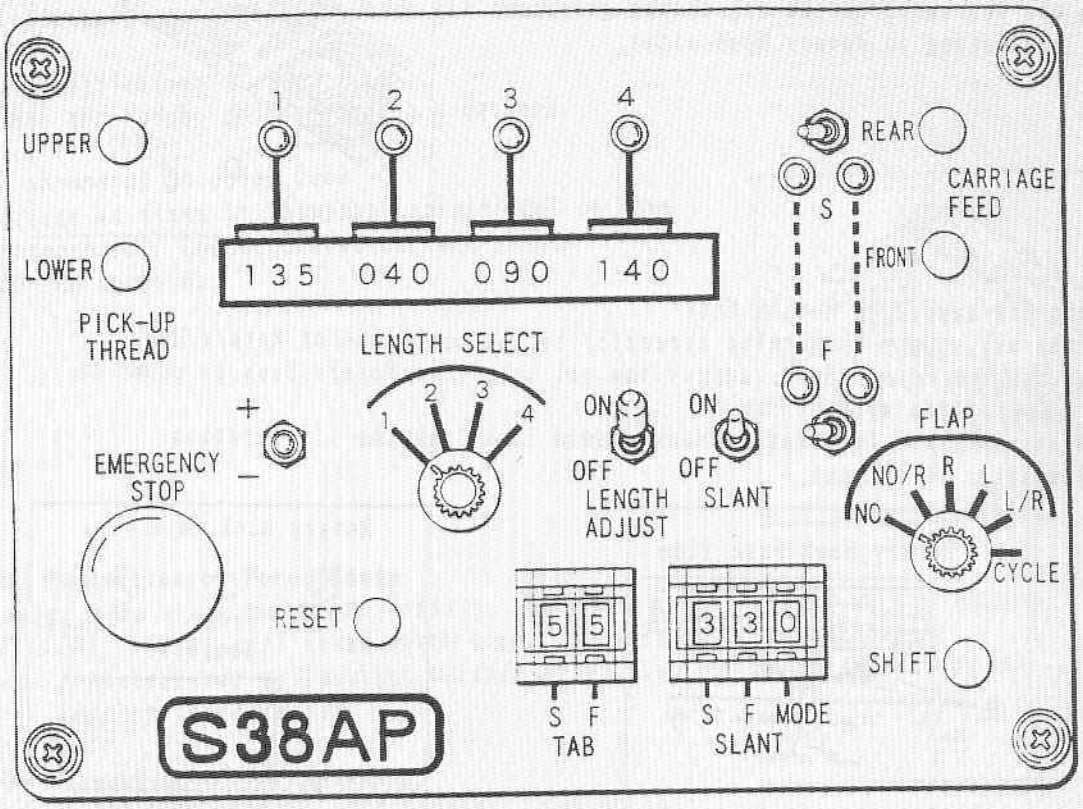

☆ DISPLAY

Sewing length and error display are indicated.

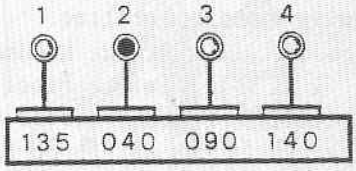

☆ LENGTH SELECT

Four kinds of sewing length can be inputted. Set LENGTH SELECT Dial as you like, and the lamp lights. In the right figure, the second lamp from left lights, and the sewing is performed for 40mm.

☆ LENGTH ADJUST

The sewing length is changed by this switch.
To prevent the failure of sewing, LENGTH ADJUST Switch should be change-over by pulling a little.
When changing, turn it ON before dialing LENGTH SELECT as you request.
When turning '+' '−' Switch to '+,' the numerals increase.
When turning it to '−,' the numerals decrease.
When continuing to turn, the numerals increase and decrease automatically.
After changing, turn it OFF. These have been memorized in the above procedure.
Set the numerals between 40 and 185.
Without these numerals, SEW LENGTH ERR is indicated on Display, when pressing Start Switch.
The sewing can not be performed.
Note: When turning this switch ON, other operations do not work.

☆FLAP

This is the dial to select the attaching type of flap.

NO····The same length is continuously sewn with no flap. Set LENGTH SELECT Dial to what you need. The corresponding Lamp lights, and the length is sewn continuously.

NO/R··Attaching no flap is alternated with attaching a flap on the right. 2 types are indicated on Display. When pressing SHIFT Switch, the indication is changed.
The sewing is performed for the length which is selected with LENGTH SELECT Dial. In the right example, a 40mm-flap is attached on the right. Optical Sensor detects the flap at the sewing start, and it is attached according to the size automatically. The left Flap Clamp lowers after the right one does.
After the sewing finish, the indication ① and ② are shifted automatically.

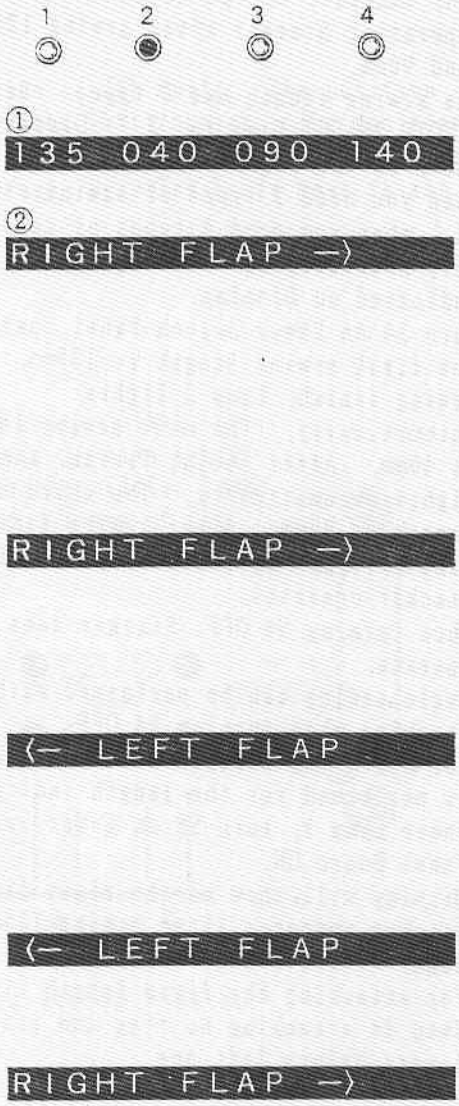

R·····The right flaps are attached continuously. Optical Sensor detects the flap at the sewing start, and it is attached according to the size automatically. The left Flap Clamp lowers after the right one does.

L·····The left flaps are attached continuously. Optical Sensor detects the flap at the sewing start, and it is attached according to the size automatically. The right Flap Clamp lowers after the left one does.

L/R···Attaching a flap on the left is alternated with attaching one on the right. Optical Sensor detects the flap at the sewing start, and it is performed according to the size automatically. When pressing SHIFT Switch, the indication is changed.

☆ CYCLE

ON···Turn the switch ON, when performing the cycle sewing.
The sewing length is set to 135, 040, 090, 140 at the shipment.
For example, set as follows, when operating Stacker after sewing 135, 40 and 90mm.

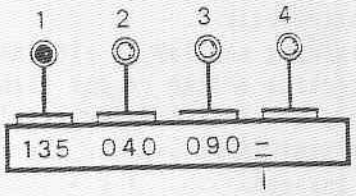

This means the operation of Stacker.

★ The sewing length has 3 types. Set LENGTH SELECT Dial to '3.' Display is shown as the right figure. Set it '2,' when you need 2 types of sewing. Set it '4,' when you need 4 types of sewing. Only necessary sewing length is indicated on Display.

135 040 090–

Even if turning S4 ON or OFF, this is shown.

★ Turn S4 on Lower Switch Panel Board ON. The first sewing length is 135mm. After sewing finish, Lamp 2 lights automatically. The next sewing length is 40mm. After sewing finish, Lamp 3 lights automatically. The third sewing length is 90mm. After sewing finish, Lamp 1 lights automatically. Last, Stacker operates.
When turning S4 OFF, Stacker does not operate.

※ Cycle sewing can be performed with no stacking when turning S4 OFF.

※ For operating Stacker after the sewing is performed for the length indicated under Lamp 1, turn S8 on Lower Switch Panel Board ON.
Display will show as the right figure.
Stacker operates after sewing 135mm and 90mm.

135–040 090–

Note: For attaching the fixed length flap, turn S11 on Lower Switch Panel Board ON.
Even if attaching no flap and performing cycle sewing, right Flap Clamp lowers before left one.

☆ SHIFT

Press SHIFT Switch, when sewing anew during cycle sewing. Whenever pressing this switch, the process returns prior to the process which Lamp is lighting. Additionally, this Switch can be shifted NO/R and L/R of Rotary Switch(Flap)

☆ PICK-UP THREAD

UPPER···This is the switch to cut the needle thread manually.
It works while pushed.
LOWER···This is the switch to cut the bobbin thread manually.
It works while pushed.

☆ CARRIAGE FEED

This is the switch to run Carriage idle.
FRONT··Carriage moves to the foremost position.
REAR···Carriage moves to the hindmost position.
After pressing EMERGENCY STOP Switch, Carriage moves slowly while pressing this switch.

☆ EMERGENCY STOP

When pressing this switch, **EMERGENCY STOP** is indicated on Display. All operates stop.

☆ RESET

This is the switch to release EMERGENCY STOP Switch and ERROR MESSAGE.

☆ TAB

This is the counter to adjust the rising position of Tab Knife. The position of Tab Knife at the sewing start is adjusted by the left counter. The position of Tab Knife at the sewing finish is adjusted by the right counter. These move 0.5mm every 1 graduation. As the numbers increase, Rear Tab Knife move to the rear and Front Tab Knife move to the front.

☆ SLANT

For the slant sewing, turn ON this switch.

☆ S, F Switch

This is a change-over type. (right, middle and left) Slant Lamp which is turned on lights, and the side of fabric is sewn longer than the other one. When setting the switch to the middle, Lamps do not light. The parallel sewing is performed. Types of the slant sewing are shown as follows:

Indication of Lamps for the slant sewing

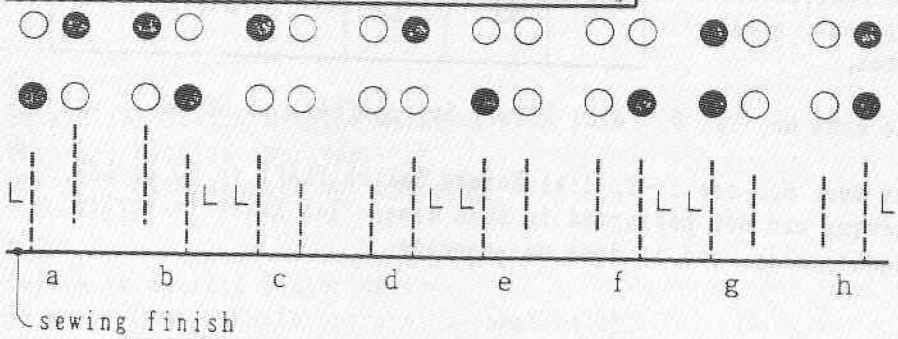

※ The parts of (L) shows the predetermined sewing length.

☆ SLANT SEWING COUNTER

S···Difference at the sewing start is set.

F···Difference at the sewing finish is set.

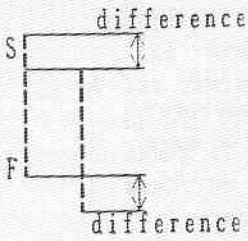

Each of them is set 1～10mm. (1=1mm 2=2mm 0=10mm) When the mode No. is '0,' the sewing type selected by S, F Switch is performed continuously.

Mode···Type of the slant sewing can be selected by the number (0～8).

0 : The sewing which you need is performed continuously.

1～8: The sewing which you select from the mode is performed right and left by turns. These are changed automatically. For sewing anew, press SHIFT Switch.

made No.	left flap	right flap	made No.	left flap	right flap
1	L. FLAP	R. FLAP	2		
3			4		
5			6		
7			8		

★ When the mode No. is '0,' dial Rotary Switch(FLAP) to NO, R, L or CYCLE.

★ When the mode No. are 1～8, dial Rotary Switch(FLAP) to NO or L/R. Cycle sewing can not performed in this time. Tab Knife is turned OFF automatically, and it does not operate.

5-2 Lower Switch Panel

☆ POWER

This is Power Switch.

☆ COUNTER

This is Integrating Counter to count the workpieces.

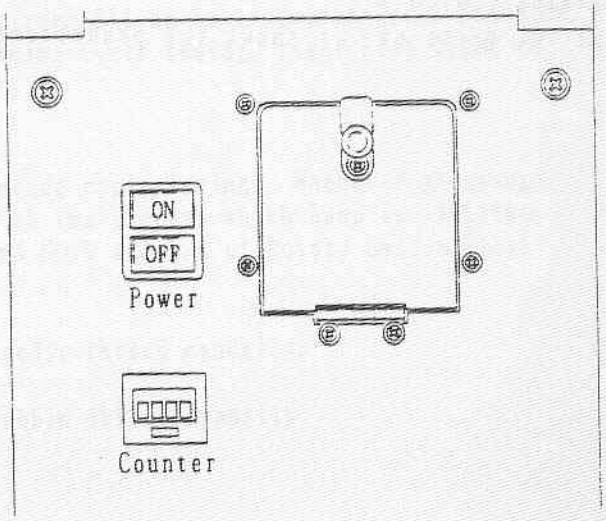

5-3 Lower Switch Panel Board

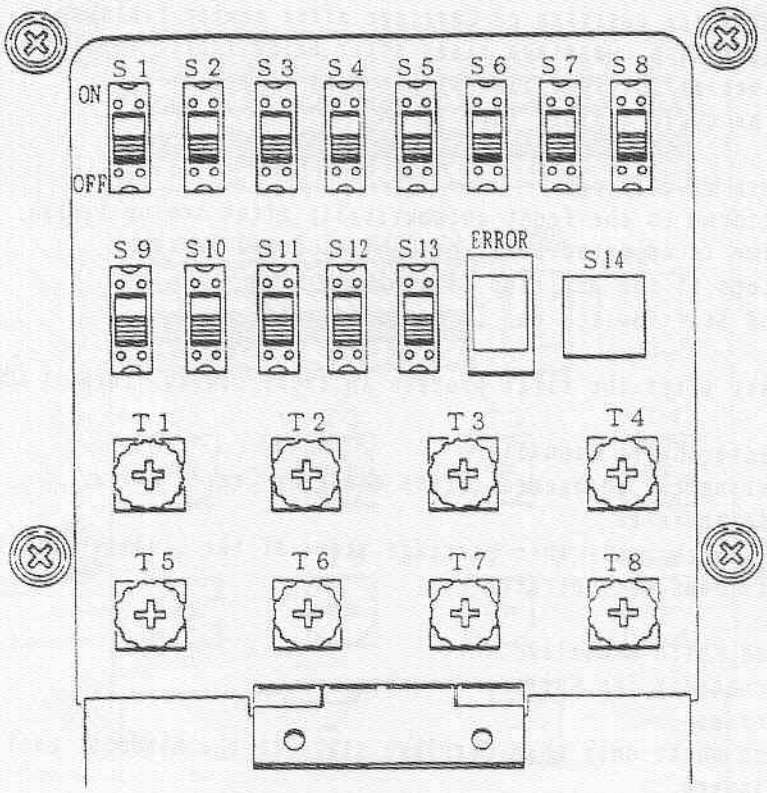

☆ S 1
Switch for Sewing Machine Motor.
ON ····· Machine operates.
OFF ···· Machine does not operate.

☆ S 2
Switch to operate Center Knife.
ON ····· Center Knife operates automatically.
OFF ···· Center Knife does not operate.

☆ S 3
Switch to operate Tab Knife.
ON ····· Tab Knife operates automatically.
OFF ···· Tab Knife does not operate.

☆ S 4
Switch to operate Stacker.
ON ····· Stacker operates.
(Select the type of Stacker with T10 of Control Board Switch.)
OFF ···· Stacker does not operate.

☆ S 5
Switch to select the lowering of Clamp Foot.
ON ····· Left Clamp Foot lowers first.
M ····· Right and left Clamp Foot lower at the same time.
OFF ···· Right Clamp Foot lowers first.

☆ S 6

Switch to select the rising position of Carriage after sewing finish.

ON ····· After sewing finish, Carriage rises after bring fabric forward.

OFF ···· Carriage rises at the same time with sewing finish.

Note: For the cycle sewing, turn it ON.

☆ S 7

Switch for auto-return of Carriage.

ON ····· Carriage returns to the front automatically after sewing finish.
(Waiting time is adjusted by T1 of Control Board Switch.)

OFF ···· Carriage stops at the position of sewing finish.
When turning Start Switch on, it moves forward.

☆ S 8

When operating Stacker after the first process in cycle sewing, turn it ON.

☆ S 9

Switch to operate Center Knife manually.

This is used for testing the engagement after changing Center Knife.

ON ····· Center Knife operates.
(This switch works only when Carriage stays at the hindmost position.)

OFF ···· Center Knife does not operate.

☆ S 10

Switch to operate Tab Knife manually.

This is used for exchanging Tab Knife.

ON ····· Tab Knife rises.
(This switch works only when Carriage stays at the hindmost position.)

OFF ···· Tab Knife lowers.

☆ S 11

Switch to operate Flap Clamp.

ON ····· Flap Clamp operates.
(Only for attaching a fixed length flap and triangled flap)

OFF ···· Flap Clamp does not operate.

(When attaching a flap automatically, it can operate while turning it OFF.)

☆ S 12

Switch to operate Bobbin Thread Monitor Cylinder.

This is used for adjusting Sensing Bar.

ON ····· Bobbin Thread Monitor Cylinder operates.
(When turning it ON, Machine Pulley must not turn)

OFF ···· Usual

☆ S 13

Switch to select auto-starts.

ON ····· When treadling Pedal fully, the sewing performance starts automatically.
(When Flap Clamp operates, auto-start does not work.)

OFF ···· The sewing performance starts only by Start Switch

☆ S 14

Switch to operate Machine Motor does manually.

This switch is used for rotating Machine Motor only, and is used for winding bobbin thread.

This switch works only when Carriage stays at the hindmost position.

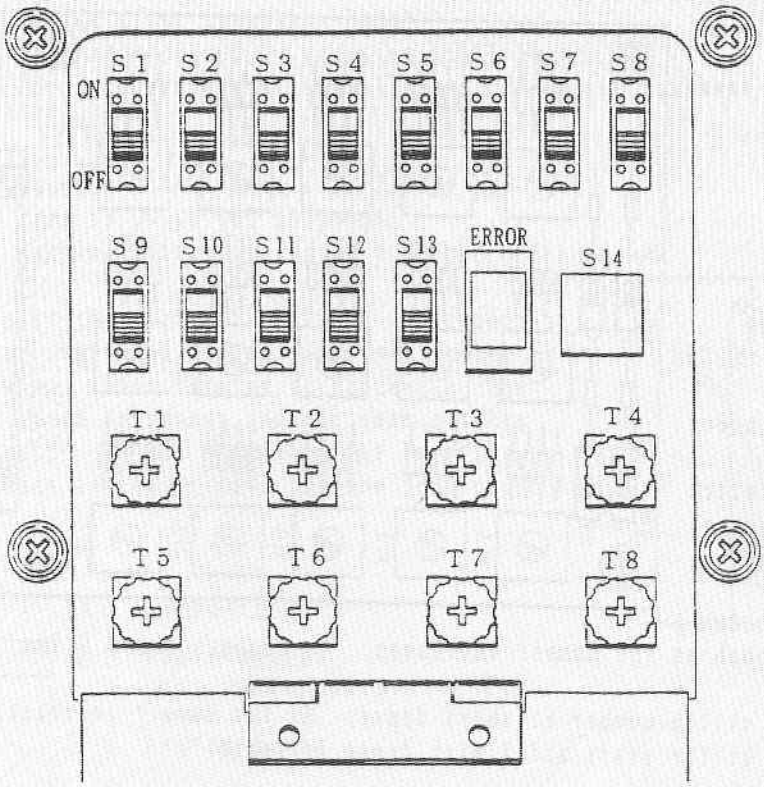

☆ T 1
Timer to set the time from lowering Patch Guide to entering Brush Blade.
As the number increases, the time becomes later. It changes every 0.1 sec.

☆ T 2
Timer to adjust the position of Center Knife at sewing start.
As the number increases, it shifts outside. It changes every 1mm.

☆ T 3
Timer to adjust the position of Center Knife at sewing finish.
As the number increases, it shifts outside. It changes every 1mm.

☆ T 4 (Spare)

☆ T 5
Timer to adjust the sewing start position, when a flap is attached on the left.
As the number increases, it shifts outside.
It changes every 0.5mm.

☆ T 6
Timer to adjust the position of the sewing start, when attaching a flap.
As the number increases, it changes outside. It changes every 0.5mm.

☆ T 7 (Spare)

☆ T 8
Timer from lowering Flap Clamp to blowing air.
As the number increases, the time becomes later. It changes every 0.1 sec.

☆ ERROR(not used)

5-4 Control Board Switch(Inside Power Box)

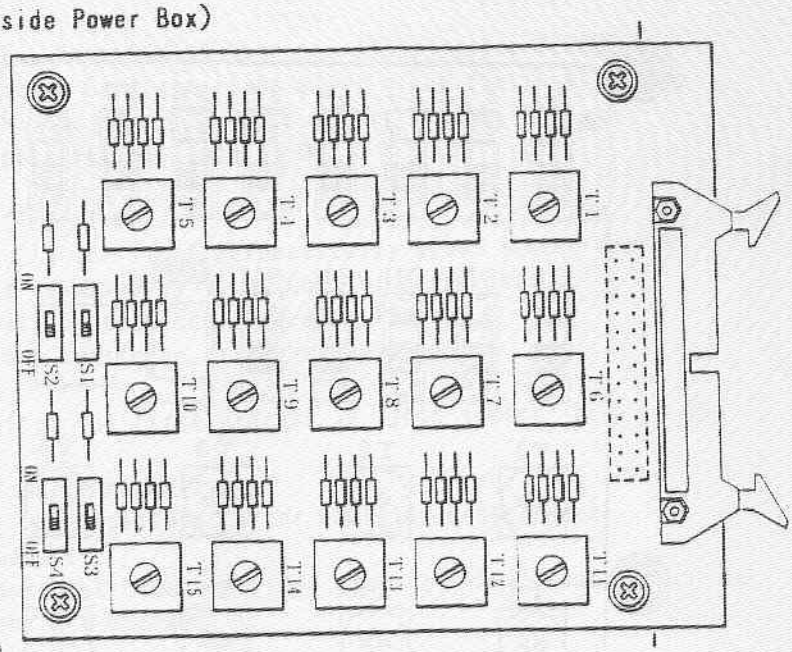

☆ T 1
This adjusts the waiting time of Carriage at the position of sewing finish. It changes every 0.2 sec.

☆ T 2
This adjusts the air blowing time for the machine equipped with Air Ejector(SA03). It changes every 0.5sec.

☆ T 3
This sets the seam pitch at the position of short dense at sewing start and sewing finish. ('5' corresponds to 1mm.) The seam becomes rough as the number increases. It changes every 0.1mm.

☆ T 4
This indicates the stitch number at short dense. As the number increases, the number of stitches at the start and finish dense increase.

☆ T 5
This indicates the seam pitch at the ordinary sewing part(center dense). The seam becomes rough as the number increases. ('5' corresponds to 2.6mm) It changes every 0.2mm.

☆ T 6
This adjusts the position of Tab Knife at sewing finish. This is used when it is not possible to adjust with T.T.K. As the number increases, it shifts outside. It changes every 1mm.

☆ T 7
This sets the position of bobbin thread trimming after sewing finish. As the number increases, bobbin thread is left long. Adjusting range is 37～52mm. It changes every 1mm.

☆ T 8 (Spare)

☆ T 9
This sets Carriage speed from pressing Start Switch to sewing start. As the number increases, the speed increases.

☆ T 10
This selects the type of Stacker.
0 ····· Trousers Stacker(SA09)
1 ····· Work Remover(SA12)
2 ····· Air Ejector(SA03) (The operating time is adjusted by T2.)
3 ····· not used

☆ T 11 (Spare)

☆ T 12
This adjusts the time fill needle thread trimming operates. As the numbers increases, needle thread is left long.

☆ T 13,14 (Spares)

☆ T 15
This adjusts the position of sewing finish. The length of sewing is not changed, but the position of sewing start is changed. The standard is 8. The length of sewing from needle drop hole to sewing finish is 230mm.

☆ S 1

ON ····· Clamp Foot and Brush Blade stop operating, when Brush Blade shift inside after treadling Pedal.
This is released by pressing RESET Switch.

OFF ···· For standard operation. (Set to OFF at the shipment.)

☆ S 2, 3 (Spares)

☆ S 4

ON ····· Machine Motor rotates by 2,000s.p.m.
(Set to ON at the shipment)

OFF ···· Machine Motor rotates by 1,000s.p.m.

☆ VR7

This adjusts the seam pitch of the difference at the sewing start and finish, when performing the slant sewing. When turning it clockwise, the rotating speed increases and the seam pitches become small. At the shipment, the rotating speed is set to 1,000s.p.m. and the seam pitch to 1mm.

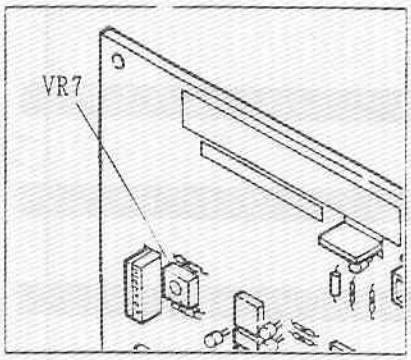

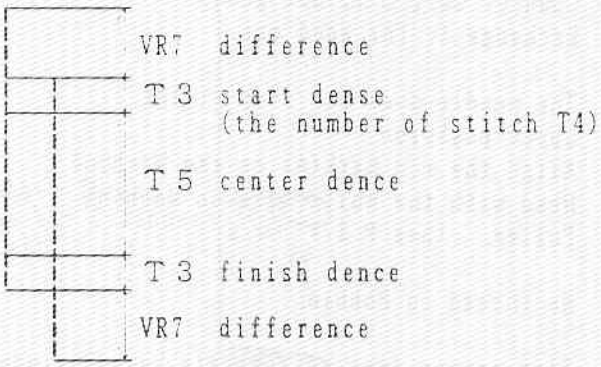

5-5 ERROR MESSAGE

When the following ERROR MESSAGES are indicated, correct each error before pressing RESET Switch.

MEMORY ERROR	Memory IC is not good. Exchange Control Board for good one.
EMERGENCY STOP	This is indicated when turning EMERGENCY STOP Switch on. Release it with RESET Switch.
SEW LENGTH ERR	The sewing length is not set 40～185 mm. Set it again.
LIMIT SW OFF	Metal Sensing Switch - (A), (E) and (F) of P.25 - is not turned ON.
COUNTER SW ERR	Counter Switch is not good. Exchange it for good one.
NEEDLE NOT UP	The needle does not stop at the upper position. Align the red mark(A) on the Machine Head with the white mark on Machine Pulley. (See P.27)
NO BOBBIN THREAD	No thread in Bobbin.
FLAP SENSOR ERR	Flap sensor does not operate. Adjust it.
FEED MOTOR ERR	Carriage Motor does not operate. (The voltage of Power Source is low.) Turn power sourse ON again.
NEEDLE THREAD	This is indicated when a needle thread is cut or no needle thread is.
NO FLAP	This is indicated that a flap is not set, when attaching a flap.
PANEL SWITCH ERR	The relation between Rotary Switch(FLAP) and MODE of SLANT on Control Box is wrong. See P.9 and reset it.

5-6 Intermediate Board(Connector No. and LED No.)

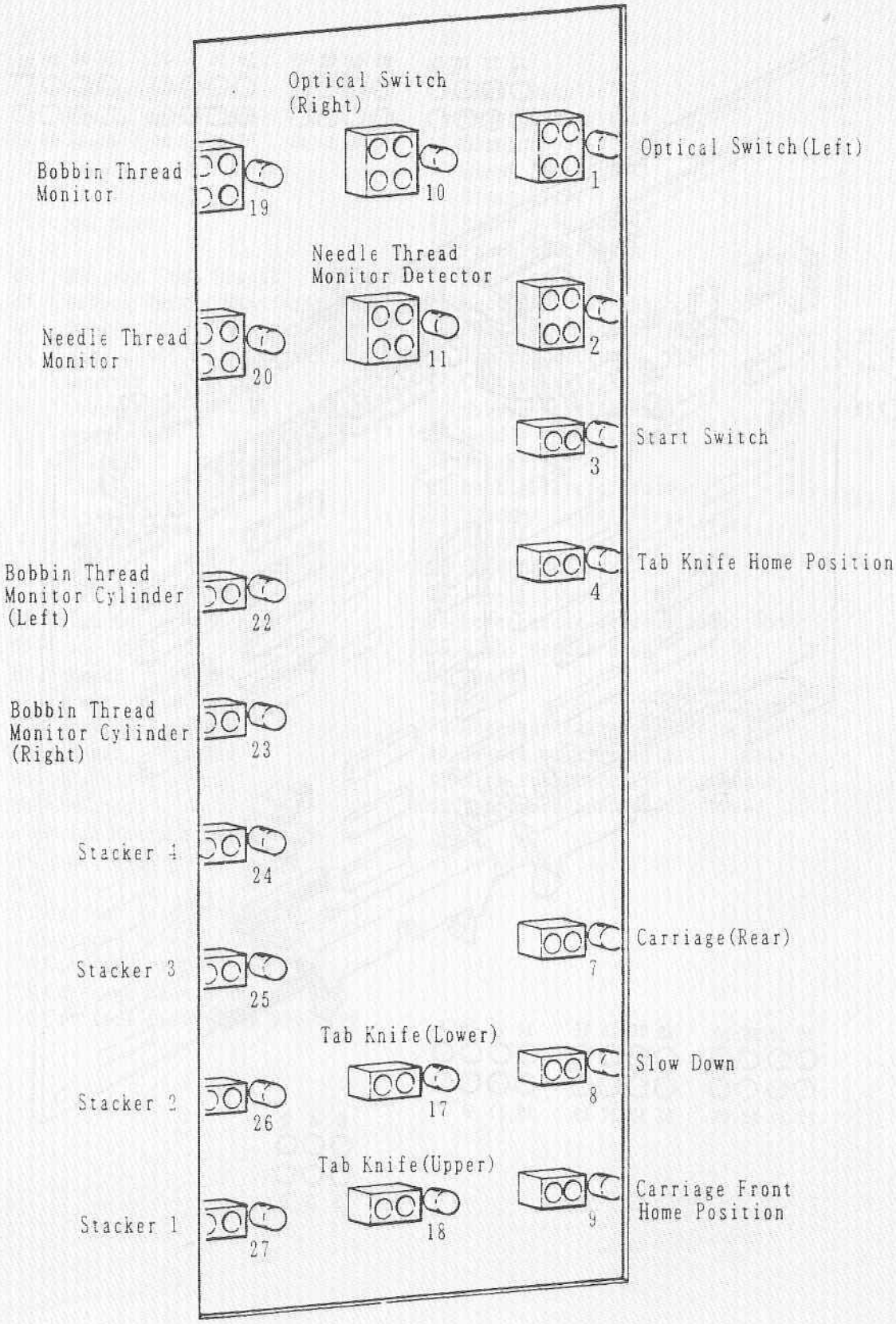

5-7 Control Board(LED No.)

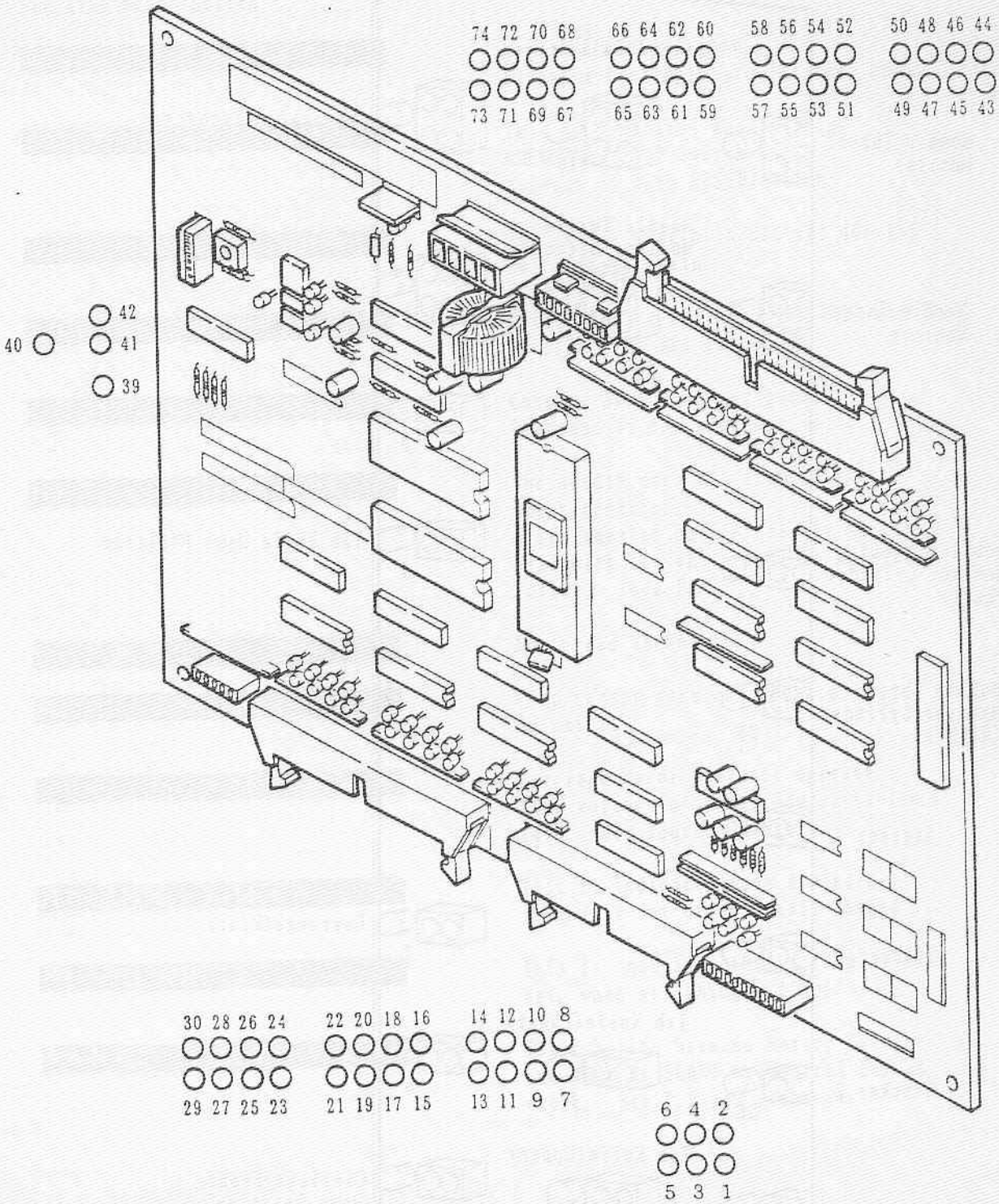

※ When each switch work, the corresponding LED on Control Board lights.

☆ Input signal

LED No.	
1	Emergency stop
2	Needle down signal (only for S38AP)
3	Needle Thread Monitor
4	Start Switch
5	not used
6	〃
43	Monitor Stop Signal
44	Bobbin Thread Monitor(right)
45	Bobbin Thread Monitor(left)
46	Home position of Bobbin Thread Monitor Cylinder
47	Stacker 4
48	Stacker 3
49	Stacker 2
50	Stacker 1
51	
/	not used
57	
58	Tab Knife(lower)
59	Tab Knife(Upper)
60	not used
61	Pedal, 5 stages
62	Pedal, 4 stages
63	Pedal, 3 stages
64	Pedal, 2 stages
65	Pedal, 1 stage
66	Neutral
67	Tab Knife home position
68	not used
69	〃
70	Optical Switch(right)
71	Optical Switch(left)
72	Carriage(rear)
73	Carriage slow down
74	Carriage front home position

☆ Output signal

LED No.	
7	Flap Clamp(left)
8	Flap Clamp(right)
9	Clamp Foot(left)
10	Clamp Foot(right)
11	Brush Blade
12	Patch Guide up
13	Patch Guide down
14	Air-blow
15	Needle Thread hold
16	Thread Tension release
17	Tab Knife Clamp
18	Center Knife
19	Bobbin thread trim
20	Needle thread trim
21	Tab Knife
22	Bobbin Thread Monitor
23	Stacker swing
24	spare
25	Stacker Clamp
26	Integrating Counter
27	Left needle stop(Only for S38AP)
28	Right needle stop(〃)
29	spare
30	〃
39	Motor operation command
40	Needle up signal(Input signal)
41	High speed operation command
42	low speed operation command

6. Proper operation of machine

6-1 Setting Needles

Loosen Screw(A).
Face the long groove of needles inside.
Insert them all the way into Needle Head.
Tighten Screws.

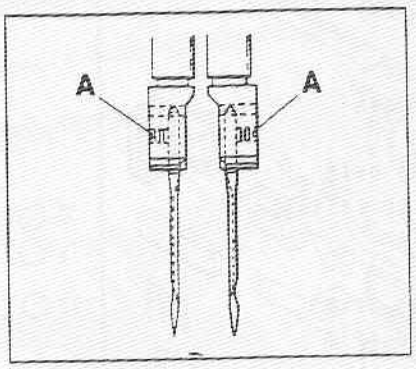

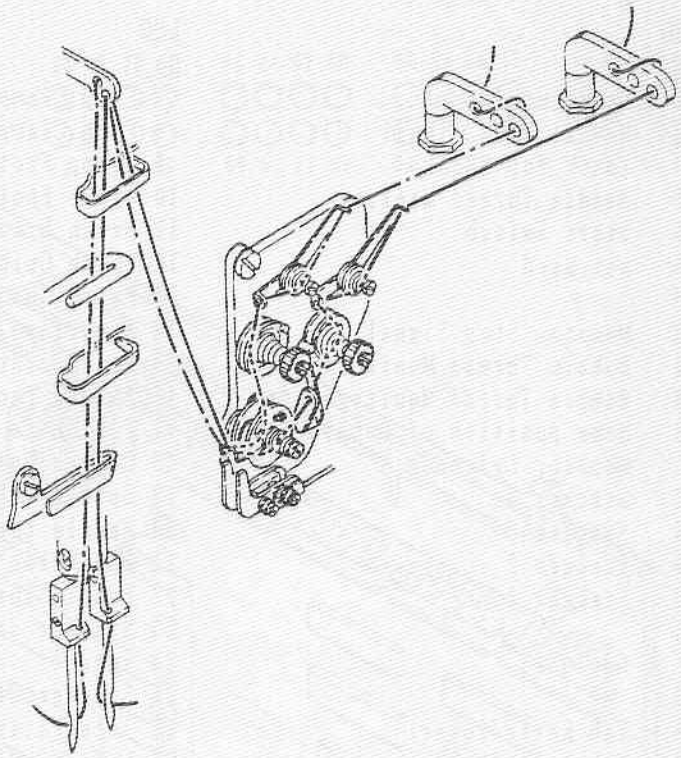

6-2 Threading Needles

Raise Thread Take-up to its highest position.
Pass the thread through the needle eyes from the inside to the outside.

6-3 Removing Bobbins

① Raise the needles to their highest position.
Move Slide Plate(B) right and left.
② Pick up Rotary Hook Latches(C).
Remove Bobbins(D).

Note : When thread of Bobbin(D) are held by Fixed Knife, press Lower of PICK-UP THREAD Switch on Control Panel to release the holding of thread.

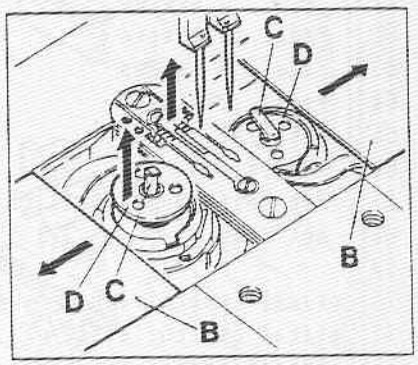

Caution ! When threading or replacing Needles, be sure to press Emergency Stop Switch before working.

6-4 Loading Bobbins and threading Bobbins

① Raise the needles to their highest position. Raise Rotary Hook Latches(C).
② Hold Bobbins(D) so that the end of thread can be turned to the right.
Insert Bobbins(right and left) into Bobbin Cases.
③ Close Latches(C) of Rotary Hook.
④ Pull the end of thread about 50mm. Lead the thread along the slit(E) of Rotary Hook and pass it under Bobbin Case Opener(F).
⑤ Turn Machine Driving Pulley manually to bring bobbin thread above Throat Plate.
⑥ Pull up the bobbin thread.
Fix two bobbin threads by hand not to turn.
Pull them toward the operator. (The correct threading is made.)

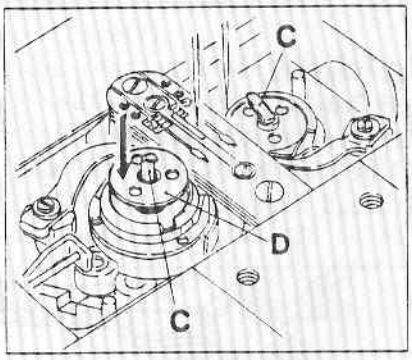

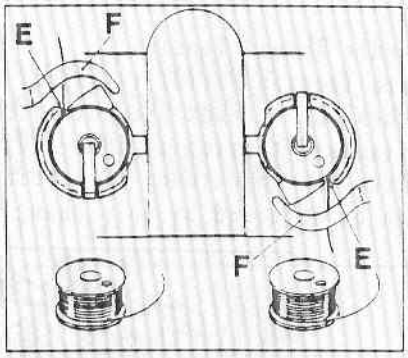

6-5 Holding needle thread and bobbin thread

① Align the red mark on Sewing Head with the white mark on Machine Driving Pulley.
② Pull 2 needle threads and 2 bobbin threads backward.
③ Continue to press UPPER of PICK-UP THREAD Switch on Control Panel. Pick-up(G) descends.
④ Pass 2 needle threads on Upper Thread Pick-up(G). When releasing PICK-UP THREAD Switch, the thread is cut, and clamped.
⑤ Continue to press LOWER of PICK-UP THREAD Switch on Control Panel.
Bobbin Thread Movable Knife moves to the right.
⑥ Lead 2 bobbin thread along each slit of Throat Plate.
When releasing PICK-UP THREAD Switch, the thread is cut, and clamped.

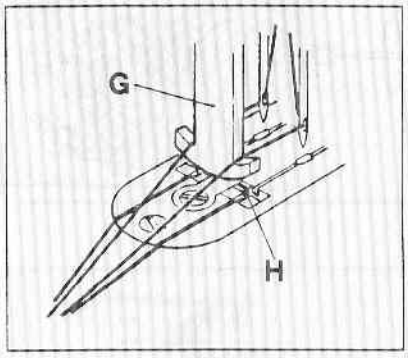

6-6 Winding Bobbin Thread

① Push Bobbin(D) onto Bobbin Winder Shaft(I).
② Push Bobbin Winder Stop Latch(J) fully.
③ Wind the thread around Bobbin(D) several times. to the arrow direction.
④ Operate the machine.
※ When the thread can not be wound evenly, loosen Screw(K), and move Thread Guide(L) to right and left to adjust.
※ To wind more thread, tighten Screw(M).

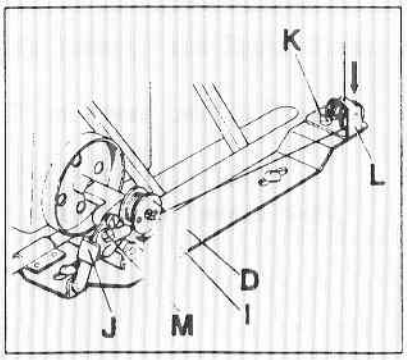

6-7 Sewing performance

① Bobbin Thread Tension

Adjust the bobbin thread tension by turning Tension Screw(N), since the proper bobbin thread tension changes according to the fabrics and thread.

※ When using span yarn #50, the standard tension is 40～50g for medium-heavy and heavy materials.

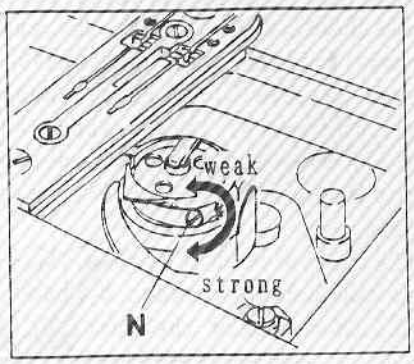

② Needle Thread Tension

Turn Tension Nut(O) to adjust the needle thread tension.
(When the threads are not passed through Thread Take-up Spring(P), the standard tension is 100～120g for the same material as the above.)

※ After the adjustment of bobbin thread tension, balance and beautiful seam can be obtained by only changing the needle thread tension.

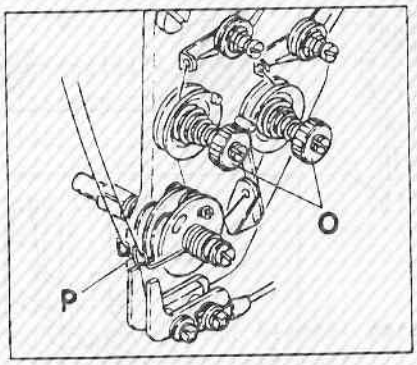

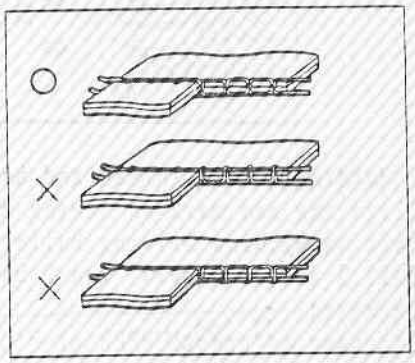

③ Thread Take-up Spring

The standard operating range of Thread Take-up Spring(P) and (Q) are 7～10mm from Sensing Plate(X). The standard tension is 20～40g. To adjust it, follow the next procedure.

Note: Adjust (Q) prior to (P). If not, you should adjust (P) again.

① Remove Screw(U).
② Loosen Screw(V). Remove Needle Thread Monitor.
③ Loosen Screw(S).
④ To tighten the tension of Thread Take-up Spring(Q), turn Thread Take-up Spring Guide Shaft(W) to counterclockwise. To loosen it, turn (W) to clockwise.
⑤ Tighten Screw(S).
⑥ Install Needle Thread Monitor with Screw(U).
⑦ Tighten Screw(V).
⑧ Check the tension of Thread Take-up Spring(P). To adjust it, loosen Screw(S). To tighten the tension, turn Thread Take-up Spring Sleeve(T) to counterclockwise. To loosen, turn it to clockwise.

Note 1: Tighten Screw(U) prior to Screw(V) without fail. (For the exact positioning.)

Note 2: Care must be taken not to be snapped the cord of Sensing Plate.

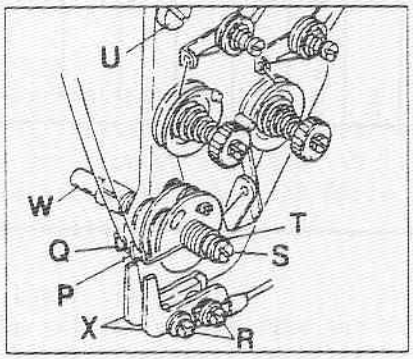

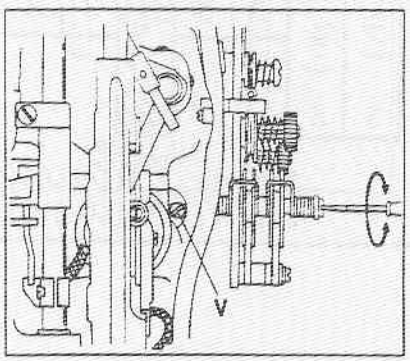

6-8 Foot Pedal Switch

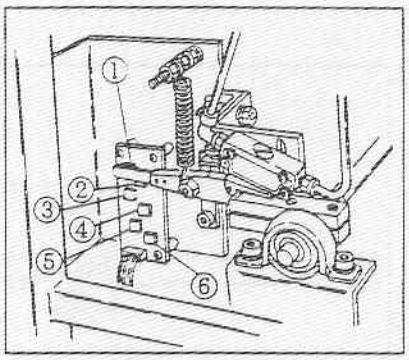

① Neutral
When treadling back the pedal, Pocket Cloth Presser rises.

② When treadling the pedal to the 1 stage, one Clamp Foot lowers first.
(The order can be set by S5 on Lower Switch Panel Board.)

③ When treadling the pedal to the 2nd stage, the other Clamp Foot lowers next.
(When turning S5 on Lower Switch Panel Board on 'M' both Clamp Foot lower at the same time.)

④ When treadling the pedal to the 3rd stage, Patch Guide lowers, and Brush Blade close.
(Adjust the time when Brush Blade close with Timer T1 on Lower Switch Panel Board.)

⑤ When treadling the pedal to the 4th stage, one Flap Clamp lowers first.

⑥ When treadling the pedal to the 5th stage, the other Flap Clamp lowers next, and air will blow.

※ If pressing Start Switch, the sewing is begun.

6-9 Work Locating Lamp

This is the lamp to indicate the position of pocket of workpiece.
Set the mark(⊞) at the position to attach the pocket.
Loosen Screw(A) to adjust right and left.
Loosen Wing Bolt(B) to adjust in front and in rear.
Adjustment of sewing finish position is not necessary after the first setting.

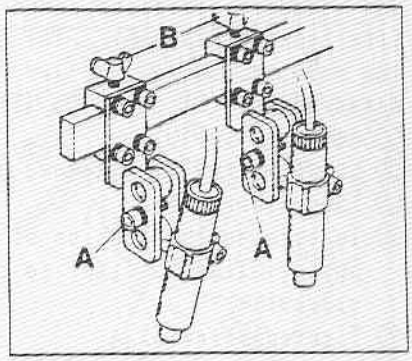

6-10 Pneumatic Valve lay out(Viewed from left side of machine)

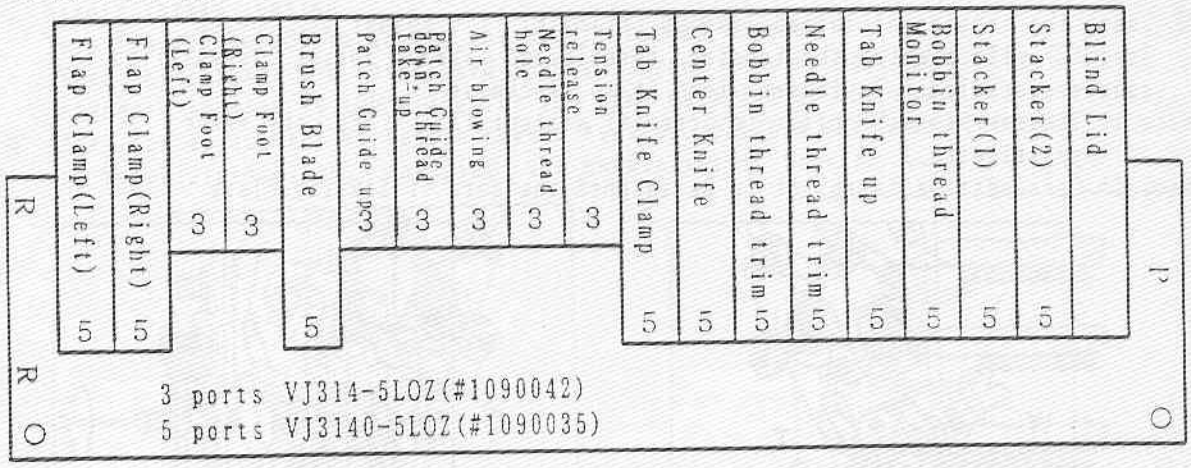

6-11 Designation and function of Metal Sensing Switch

☆ Carriage Home Position(A)
Make the distance between the center of needle and the tip of Clamp Foot 250mm, when Carriage comes at the foremost position.
In this time, Switch(A) is set to light Lamp(9) on Intermediate Board.

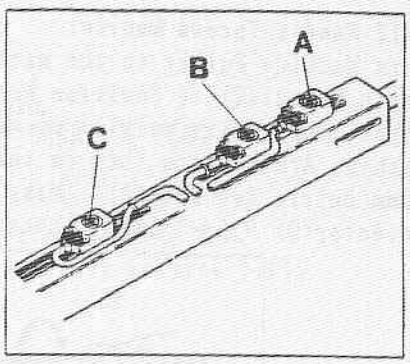

☆ Slow Down(B)
This is the switch to fix the position which Carriage begins to slow down to stop at Home Position(A) correctly.
In this time, Carriage moves to the operator's side, and slows down at(B), and then stops at(A)

☆ Carriage Rear(C)
This is the switch to fix the position which Carriage moves to the hindmost.
At the time of adjustment of Machine Head, the head can be leaned against Sewing Machine Stay.
When detected, Lamp(7) on Intermediate Board lights.

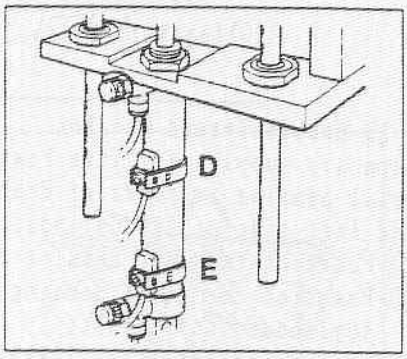

☆ Tab Knife Upper Limit(D)
After sewing finish, Tab Knife Upper Limit rises.
Adjust the position of Switch(D) to light Lamp(18) on Intermediate Board, when Tab Knife rises 11mm above Slide Plate.

☆ Tab Knife Lower Limit(E)
This is the switch to make sure the return of Tab Knife to the lowermost position.
When it returns correctly, Lamp(17) on Intermediate Board lights.

☆ Tab Knife Home Position(F)
This is the switch to make sure the movable Tab Knife Holder returns to the home position.
When it returns, Lamp(4) on Intermediate Board lights.

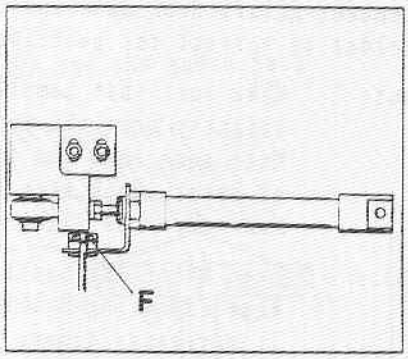

Note: When Metal Sensing Switch(A), (E) and (F) is turned OFF, machine does not operate.

6-12 Needle Thread Monitor

Turn Machine Pulley to the machine rotating direction.
Match Magnet(C) to Position Detector(D) so that Lamp(11) on Intermediate Board lights when White Mark(B) of Machine Pulley comes 25mm before Red Mark(A) of Machine Arm. Match them so that Lamp(11) is turned of when White Mark(B) comes 20mm before Red Mark(A). Make the clearance between Magnet(C) and Position Detector(D) 0.5~1.0mm. Loosen Screw(E) to adjust them.

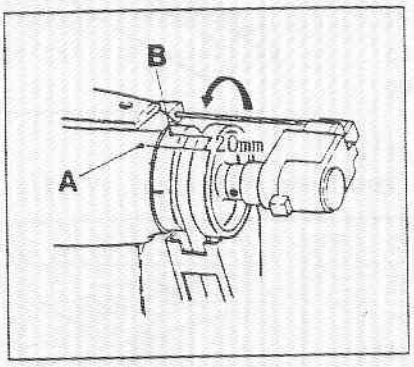

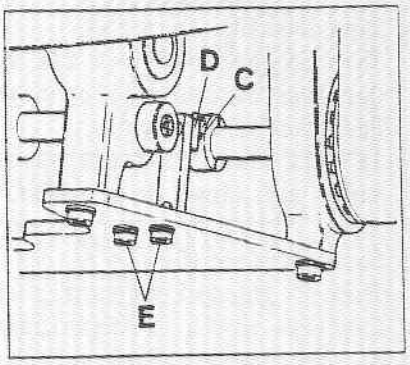

6-13 Bobbin Thread Monitor

Turn air supply off. Turn Power Supply ON. Press EMERGENCY STOP Switch.
Metal Sensing Switches of Bobbin Thread Monitor are installed on both right and left side of Air Cylinder. Adjust them as follows:

① Position the left Sensing Bar to the extreme left. (Cylinder Rod advances.)
② Position the right Sensing Bar to the extreme right.
(Cylinder Rod retreats.)
③ Loosen Screws of Metal Sensing Switch.
Move the switch to right and left gradually.
Fix the switch at the position which Lamp(23) on Intermediate Board lights.

Note : Lamp(23) lights when both Metal Sensing Switch detect.

Move Sensing Bar toward Rotary Hook.
When it contacts Bobbin, Lamp on Intermediate Board lights.
For the left one Lamp(19) and for the right one Lamp(20) light.
If Lamp(19) and(20) light before Sensing Bar contact Bobbin, Sensing Bar contact Rotary Hook Base and others. Loosen Screw(A) and move Thread Monitor Holder to correct the position of Sensing Bar.

Note 1 : Make sure that Lamp(23) is turned off when moving Sensing Bar slightly from the position where Lamp(23) lights.
Make sure that the tip of Sensing Bar does not interfere with the tip of Rotary Hook when Lamp(23) is turned off.
Make sure the right one and the left one respectively.

Note 2 : Even after Air Supply is cut off, Power Supply is still turned ON.
When adjusting Bobbin Thread Monitor, the machine must not operate.
It may cause damage of Rotary Hook and Bobbin Thread Monitor.

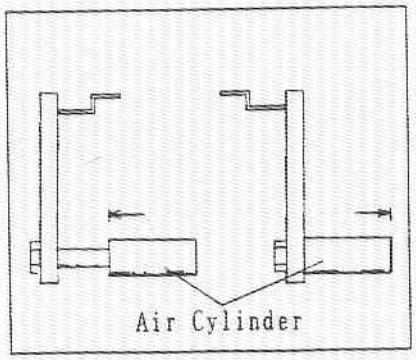

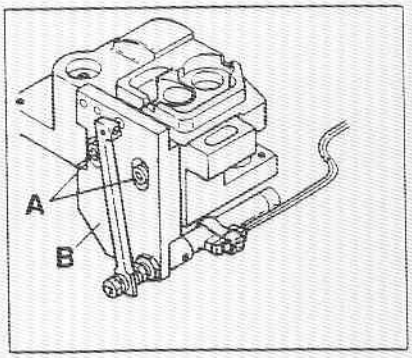

7. Notice before actual sewing

① Make sure the oil amount of each parts of Sewing Head.
Supply the manual oiling points with oil.
② Clean Optical Sensor and Reflective Sheet with soft cloth.
③ Move Carriage before and behind once or twice and press CARRIAGE FEED Switch.
④ Check each Switch on Control Board.
⑤ Check the holding of needle and bobbin thread.
⑥ Check the alignment of White Mark on Pulley and Red Mark on Machine Arm.
⑦ Check the position of Work Locating Lamp and each operation of machine parts after sewing performance.

8. Adjustment

8-1 Adjustment of timing between Rotary Hook and Thread Take-up

① Remove needles.
② Lean Sewing Head against Sewing Machine Stay. Remove Timing Belt(C).
③ Align White Mark(B) on Machine Pulley with Red Mark(A) of Sewing Head.
④ Holding Upper Shaft in place, align the arrow mark of Lower Belt Wheel(D) with the base line of Sewing Head, then set Timing Belt(C).
⑤ Raise up Sewing Head and install needles.

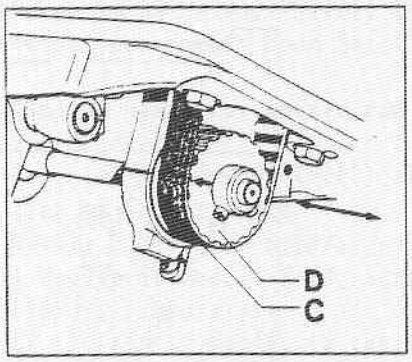

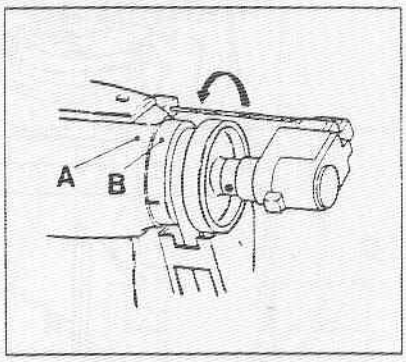

8-2 Adjustment of timing between Needle and Rotary Hook

☆ Clearance between Needles and the tip of Rotary Hook
① Make the clearance between needle and the tip of Rotary Hook 0.05mm.
Loosen Screw(A),(B) and(C) and move Rotary Hook Bases(D) right and left to adjust it.
② Make the clearance between the inside of Rotary Bases(D) and the endsurface of Lower Shaft Gear(E) about 0.2mm.
Adjust the engagement by moving Lower Shaft Gear(E) right and left.
※ Tighten Screws(C) of Lower Shaft Gears(E) correctly to its flat spot.

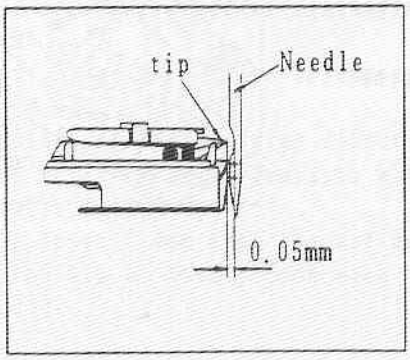

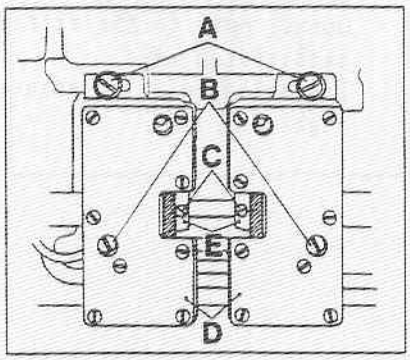

☆ Clearance between Rotary Hook and Throat Plate

① Adjust the clearance between Rotary Hook(F) and Throat Plate 0.6~0.9mm. Loosen Screw(G) to adjust by moving Rotary Hook up and down.

☆ Rising Amount and Height of Needle Bar

① Loosen Screw(G). When a needle rises to 2.4mm from the lowest position, bring the tip(like a beak) of Rotary Hook(F) close to the center of needle by turning it.

② The width between the tip of a beak and the top of needle eye is 1.0~1.5mm. To make the width, remove Screw(H). To adjust the height of Needle Head(S), turn Adjusting Screw(R).

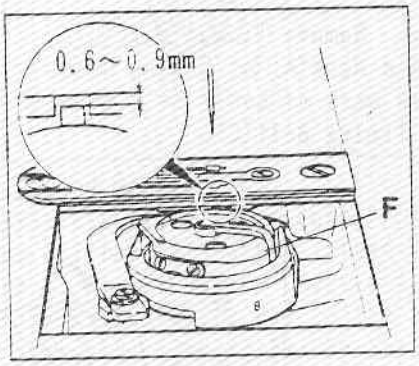

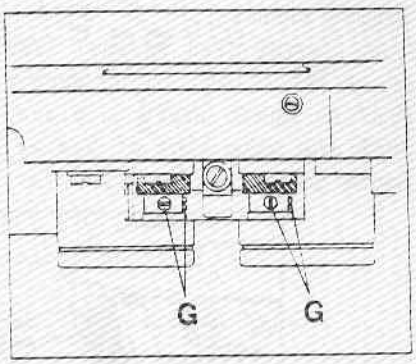

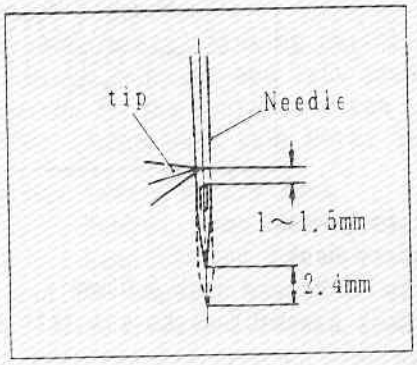

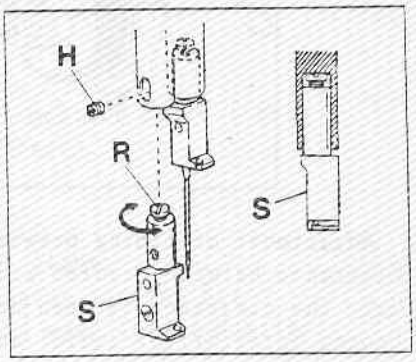

☆ Clearance between Rotary Hook and Bobbin Case Opener

① Make the clearance between Rotary Hook(F) and Bobbin Case Opener(I) 0.2mm when Bobbin Case Opener move to the extreme outside from the needle drop hole.
Loosen Screw(J) to adjust Bobbin Case Opener right and left.

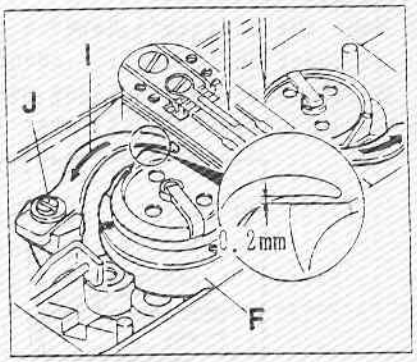

☆ Adjustment at the change of Needle Bite Size

★ To widen Needle Bite Size

① Loosen Screw(A), (B) and (C) and move Rotary Hook Base(D) right and left.
(3 Screws(C) exists)

② Install Throat Plate.

③ Insert Needle Head into Needle Bar, Screw it.

④ Install needles.
(Check the height and parallelism of needle)

⑤ Adjust the timing between Needle and Rotary Hook. (See 8-2.)
After adjustment of the clearance between the tip of Rotary Hook and Needle, tighten Screws(A), (B) and (C).

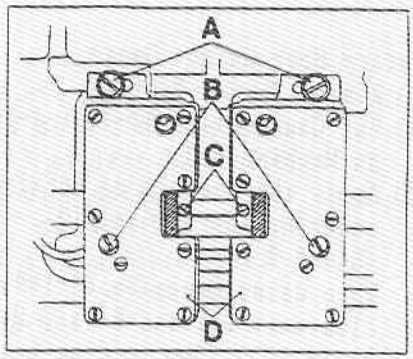

★ To narrow Needle Bite Size

① Install Throat Plate.

② Insert Needle Head into Needle Bar, Screw it.

③ Install Needles. (Check sure the height and parallelism of needles.)

④ Adjust the timing between Needle and Rotary Hook. (See 8-2.)
A this time, set Rotary Hook Base(D) with Screws(A), (B) and (C).

8-3 Application of Gauge(For Needle and Rotary Hook)

☆ Needle Height Gauge

① Apply Gauge(N)(No.38-1001-4-800) against the right side of Throat Plate.

② Raise Needle Bar to its highest position.

③ Install needle in Needle Head, Screw(H) (See P.28) it temporarily.

④ To raise the tip of Needle to the same height as (O), turn Adjusting Screw(R) (See P.28) to adjust.

⑤ Apply needles against the surface(P) of Gauge and check the parallelism.

⑥ Tighten Screw(H) securely.

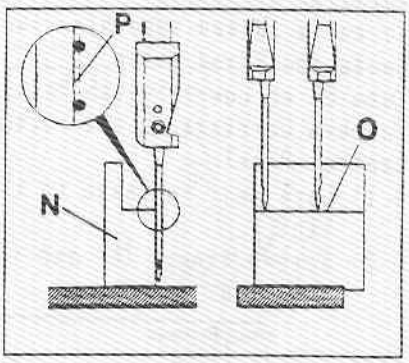

☆ Timing Gauge for Needle and Rotary Hook.

① Lower Needle Bar to the lowest position.

② Put Gauge(K)(No.38-1001-4-806) on Needle Bar. Put Gauge(L)(No.38-1001-4-805) under Gauge(K).

③ Applying Gauge(K) against the undersurface of Arm and applying Gauge(L) against(K), tighten Screw(M).

④ Pull out Gauge(K). (The thickness of Gauge is 2.4mm.)

⑤ Turn Pulley to the rotating direction of machine until Gauge(L) contacts with the undersurface of Arm.
(Needle rises 2.4mm from the bottom.)

⑥ Align the tip of Rotary Hook with the center of needle.

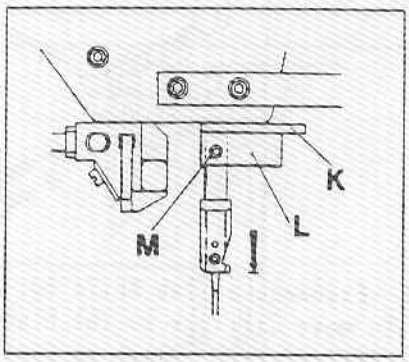

☆ Rotary Hook Height Gauge

① Remove Throat Plate.

② Put Gauge(Q) (No.38-1001-4-803, 38-1001-4-804) on Machine Bed.

③ Apply the surface of Rotary Hook(F) to the undersurface of Gauge(Q). Tighten Screw(G). (See **8-2.**)
When using Gauge(No.38-1001-4-803), the clearance between Rotary Hook and Throat Plate is 0.75mm.(medium between 0.6～0.9mm)

※ Gauge No.38-1001-4-803 is for standard thread (0.75mm) and Gauge No. 38-1001-4-804 is for Thick thread (0.9mm).

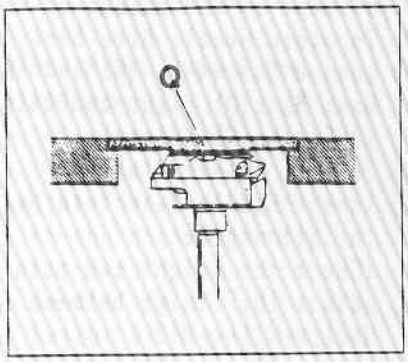

8-4 Exchange of Center Knife and Adjustment of Engaging Pressure

① To move Carriage to the hindmost, press REAR of CARRIAGE FEED Switch on Control Panel.

② Turn S9 on Lower Switch Panel Board ON. Center Knife lower.

③ Remove Screw(A). Install new Center Knife. Place Center Knife against (C) and (D) of Center Knife Holder(B). Tighten Screw(A).

④ To lower Center Knife at the bottom of its travel, turn Machine Pulley to the rotating direction.

⑤ To cut a thread smoothly, loosen Screw(F) and adjust the pressure of Center Knife and Fixed Knife.

⑥ Turn S9 on Lower Switch Panel Board OFF. Center Knife rise.

⑦ To move Carriage to the foremost, press FRONT of CARRIAGE FEED Switch on Control Panel.

Note 1: Care must be taken to the direction of Center Knife not to break the tip(E).

Note 2: Screws except (A) and (F) should not be touched to keep the correct position.

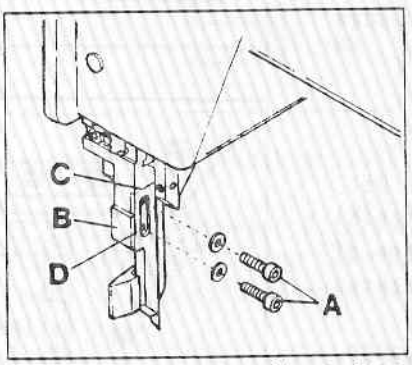

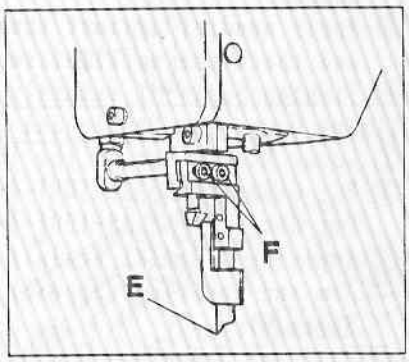

8-5 Exchange of Tab Knife for Slant Sewing

① To move Carriage to the hindmost, press REAR of CARRIAGE FEED Switch on Control Panel.

② Turn S10 on Lower Switch Panel Board ON. Tab Knife appear out of Table Top.

③ Loosen Screw(A). Remove Tab Knife.

④ Install new Tab Knife. Make a difference between inside surface of Tab Knife and that of Tab Finger 4mm(standard). Tighten Screw(A).

⑤ Turn S10 on Lower Switch Panel Board OFF. Tab Knife lower.

⑥ To move Carriage to the foremost, press FRONT of CARRIAGE FEED Switch on Control Panel.

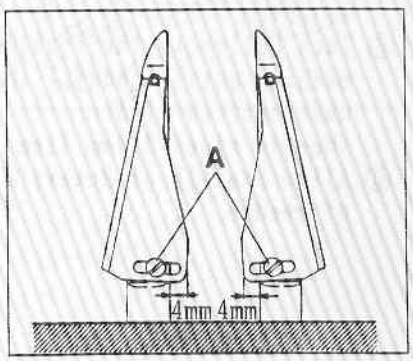

8-6 Adjusting Tab Knife for Slant Sewing

See Figures and follow the next procedure.

① For a difference at the sewing start, loosen Screw(A) of right Tab Knife. Shift right Tab Knife to the arrow direction by a half of a difference(a).

② For a difference at the sewing start, loosen Screw(A´) of left Tab Knife. Shift left Tab Knife to the arrow direction by a half of a difference(a).

③ For a difference at the sewing finish, loosen Screw(B) of left Tab Knife. Shift left Tab Knife to the arrow direction by a half of a difference(b).

④ For a difference at the sewing finish, loosen Screw(B´) of right Tab Knife to the arrow direction by a half of a difference(b).

According to the stitches, adjust them.

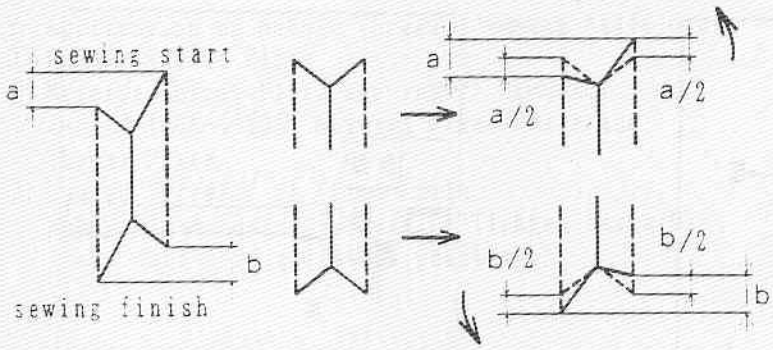

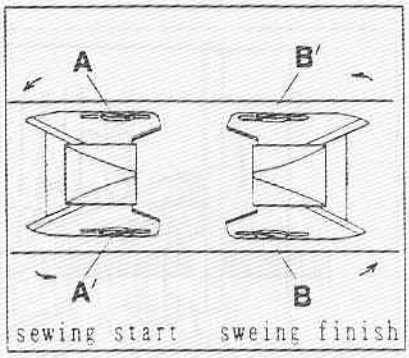

8-7 Exchange of Tab Finger for Parallel Sewing

① To move Carriage to the hindmost, press REAR of CARRIAGE FEED Switch on Control Panel.

② Turn S10 on Lower Switch Panel Board ON. Tab Knife appear out of Table Top.

③ Loosen Lock Screw(C). Remove Tab Finger for slant sewing.

④ Install Tab Finger for parallel sewing with Lock Screw(C).

⑤ Turn S10 on Lower Switch Panel Board OFF. Tab Knife lower.

⑥ To move Carriage to the foremost, press FRONT of CARRIAGE FEED Switch on Control Panel.

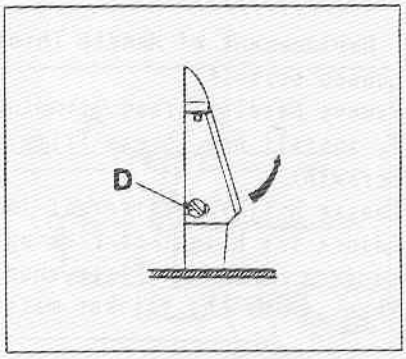

☆ Exchange of Tab Knife

① Loosen Screw(D). Remove Tab Knife.

② Install new Tab Knife. Make inside surface of Tab Knife even with that of Tab Finger. Push Tab Knife down. Tighten Screw(D).

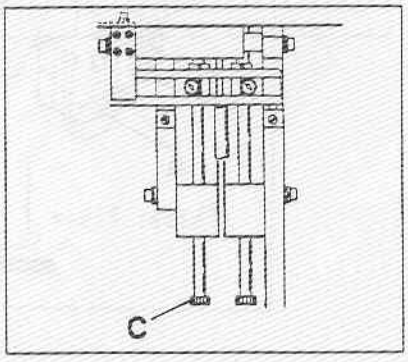

8-8 Adjustment of Tab Knife

Make a clearance of 33mm between Fixing Bar and Tab Knife Holder when Tab Knife is uppermost position. Loosen Screw(E) to adjust it.
Make a clearance of 1.0mm between Holder(Rear) and Holder(Front) when Movable Tab Knife returns to the home position.
Loosen Nut(F) of Tab Knife Cylinder to adjust it.

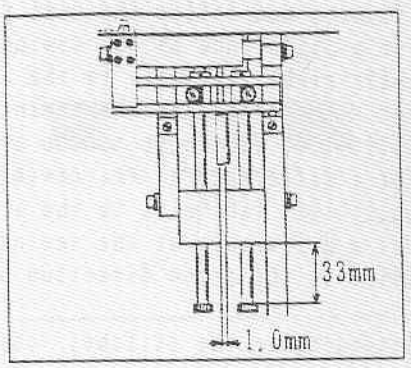

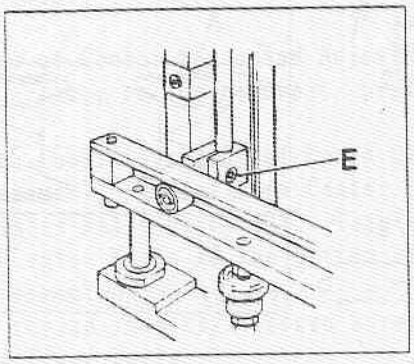

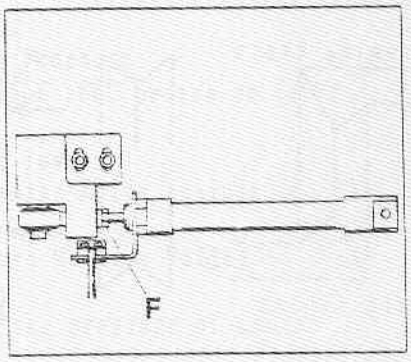

8-9 Replacement of Needle Thread Trimming Knife

① Loosen Screw(A).
Remove Needle Thread Trimming Knife.
② To install new Thread Trimming Knife, apply it to Pick-up and tighten Screw(A).
※ Loosen Nut(B)of Universal Joint.
Adjust the height of Pick-up 2mm above the surface of Throat Plate when Pick-up descend to the lowest position.
When sewing the thicker material, it should be higher than 2mm.

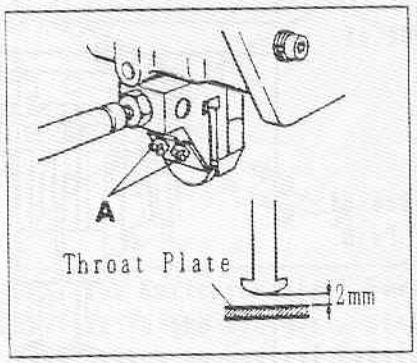

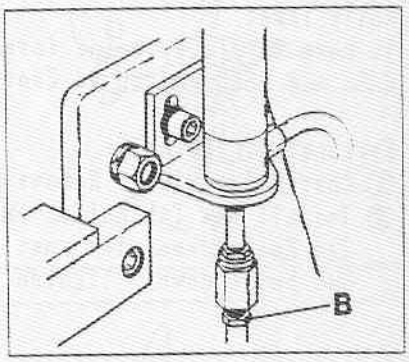

8-10 Replacement of Bobbin Thread Trimming Fixed Knife

① Remove Throat Plate.
② Remove Fixed Knives(A) and (B) installed on the underside of Throat Plate.
③ Install new Fixed Knives to Throat Plate.
Fix the engagement pressure with Gauge.
When Gauge is not available, fix the clearance to 2.95mm as shown in the illustration.
As for the left/right position, install them so that the right endsurface of slit of Throat Plate aligns with the right endsurface of slit of Fixed Knife.

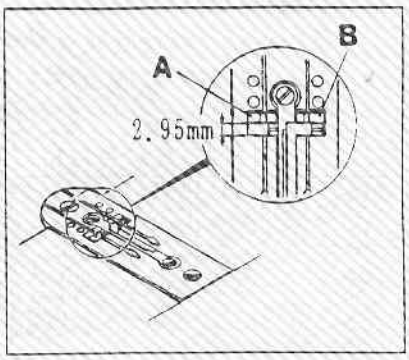

☆ Application of Bobbin Thread Trimming Knife Gauge
① Remove Throat Plate.
② Reverse Throat Plate and insert Gauge(C) (No.46-1001-4-807) between Fixed Knife and Throat Plate.
③ Loosen Screw(D) of Fixed Knife.
Apply Fixed Knife to Gauge(C) Tighten Screw(D).
(Take care left and right position.)

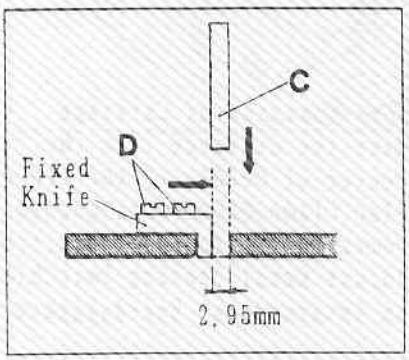

8-11 Replacement of Bobbin Thread Trimming Movable Knife

① Remove Throat Plate.
② Slide 2 Slide Plates to the left. Lean Sewing Head against Sewing Machine Stay.
Take care not to clamp Slide Plate between Sewing Head and Table.
③ Remove Screw(A) of Movable Knife.
Loosen Screw(B) and remove Movable Knife.
④ Install new Movable Knife so that the trimming position becomes highest after the Knife moves.
It should not come out above the surface of Throat Plate.
※ Loosen Screw(C) and move Collar right and left to adjust the moving amount of Movable Knife.
Adjust by turning Nut(D), so that Movable Knife does not interfere with Throat Plate when Movable Knife returns. (Cylinder Rod extends).

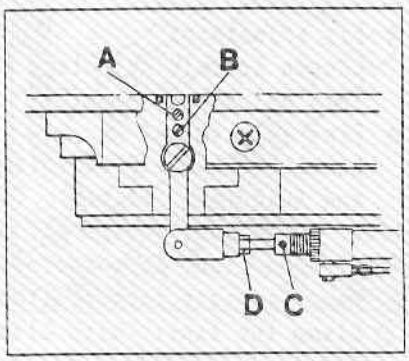

8-12 Adjustment of Carriage

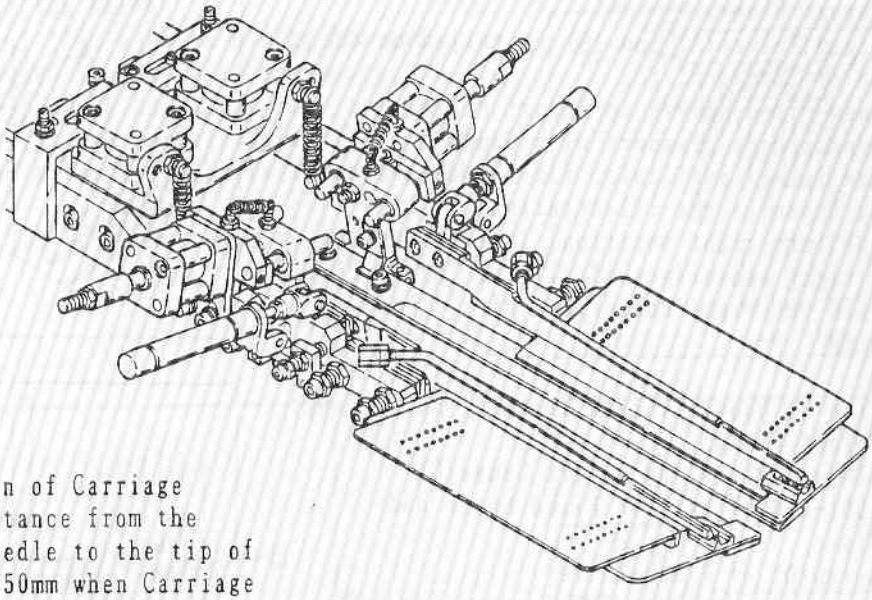

☆ Home position of Carriage
Make the distance from the center of Needle to the tip of Flap Clamp 250mm when Carriage comes to the foremost position.
Adjust Metal Sensing Switch(A) so that Lamp(7) on Intermediate Board lights. (See 6-11.)

☆ Parallelism between Needle and Clamp Foot Adjust Clamp Foot(Left) and (Right) of Carriage to be parallel with Needle.

★ Big adjustment
Loosen Screw(B) of Clamp Foot Adjustment Block. Turn Adjusting Screw(C).

★ Fine adjustment
Loosen Lock Nut(D) of Clamp Foot Connecting Arm and Adjusting Screw(E). Turn Screw(F).

※ After adjustment, check the parallelism between Needle and Clamp Foot following the order below :

① Move Carriage forward (toward the operator).
② Clamp the fabric with Clamp Feet by treadling Pedal.
③ Press "EMERGENCY STOP" Switch on Control Panel.
④ Press 'FRONT' and 'REAR' of "CARRIAGE FEED" Switch on Control Panel and check the action.

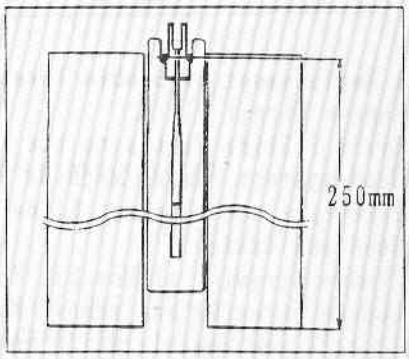

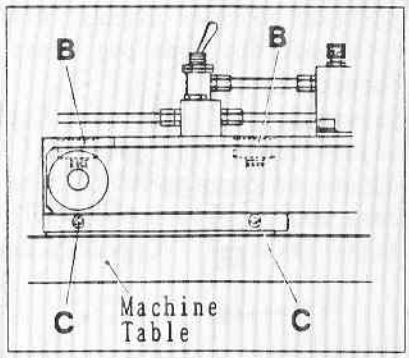

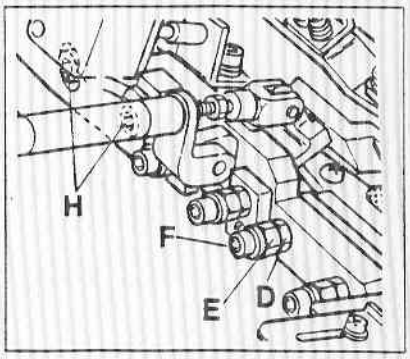

☆ Pressure of Clamp Foot
Both when Carriage is in the forward and backward, the pressure must be the same in the front and in the rear when Clamp Foot descends. Loosen Screws(H) of Clamp Foot Connecting Arm to adjust it.

☆ Height of Clamp Foot

Make the uppermost position of Clamp Foot 26mm.

They can be adjusted by loosening Lock Nut(I) and turning Adjusting Screw(J).

Note : Be sure that Sewing Head does not strike on Clamp Foot, with moving Carriage to the hindmost and rising Clamp Foot, when leaning Sewing Head adjust Sewing Machine Stay.

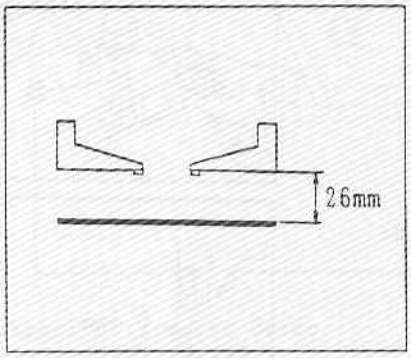

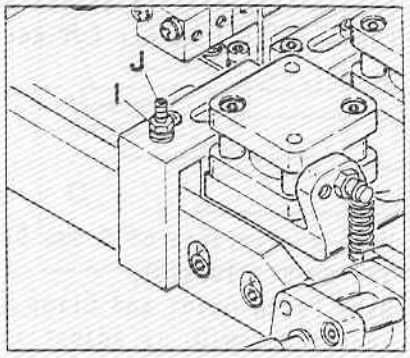

☆ Needle and Brush Blade

In the foremost position of Brush Blade, make a clearance of 0.5~0.8mm between Needle and Brush Blade.

They must be parallel with each other.

The clearance is adjusted by loosening Nut(K) of Air Cylinder and turning Clamp Foot Adjusting Block(L).

The parallelism is adjusted by loosening Screw(M) of Brush Blade.

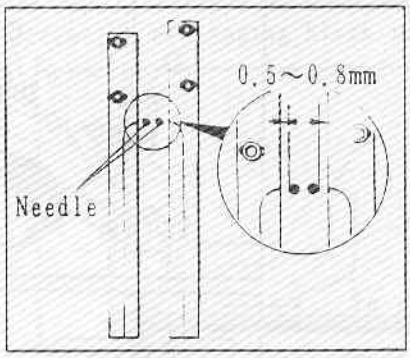

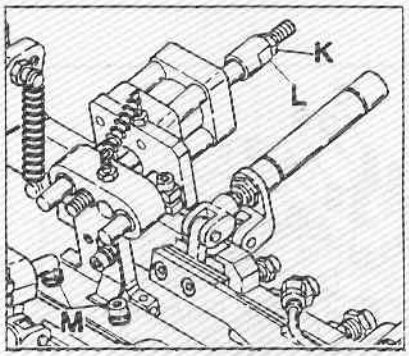

☆ Adjustment of Flap Clamp

When lowering Flap Clamp, make the inside of Flap Clamp even with the inside of Clamp Foot.

The adjustment is made by loosening Lock Nut(N) and turning Adjusting Screw(O).

Make Flap Clamp Rubber parallel with Brush Blade to press a flap evenly.

The adjustment is made by loosening Lock Nut(N) and turning Adjusting Screw(O) and Screw(P).

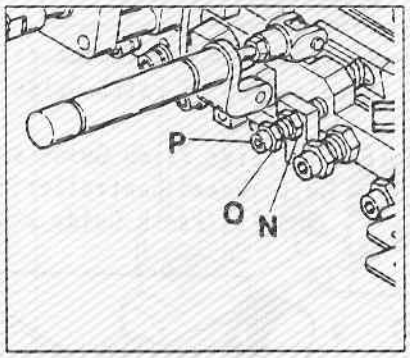

8-13 Adjustment of Patch Guide

① When descending Patch Guide to the lowest position, make a clearance between Patch Guide and the surface of Slide Plate 0.3mm.
Make them parallel.
Loosen Screws(A) to adjust it.
Loosen Nut(B) of Air Cylinder to adjust the height.

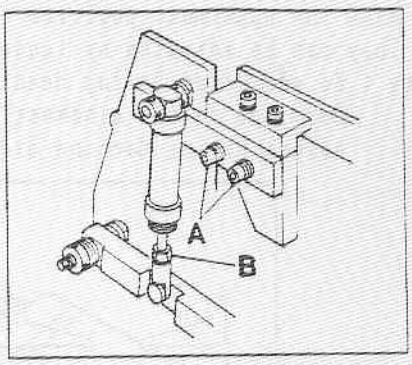

② Make a clearance of 0.5mm between Patch Guide and Mount Block(C).
Make Patch Guide and Clamp Foot parallel.
Loosen Screw(D) to adjust it.

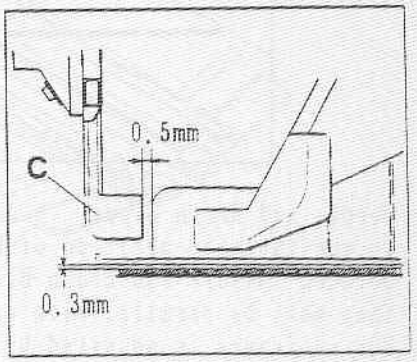

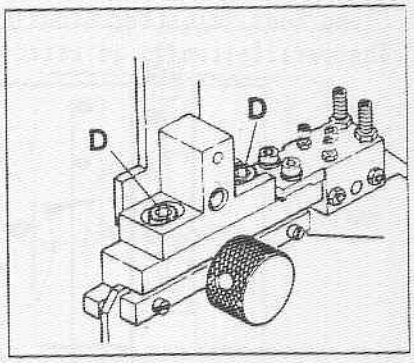

③ When Patch Guide descends, make a clearance of 0.7mm between it and Clamp Foot(E).
Loosen Screw(F) and move Patch Guide right and left.
At this time, check the relative position of needle drop of Patch Guide with needle.

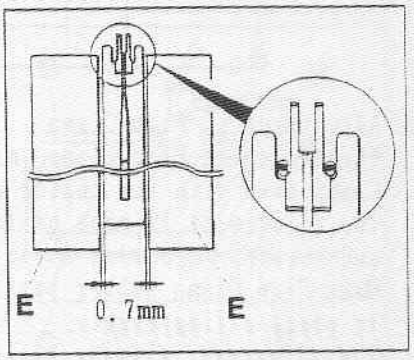

Note : To raise Patch Guide smoothly, adjust it with Speed Controller(H)(Patch Guide lower) and (J)(Patch Guide rise).

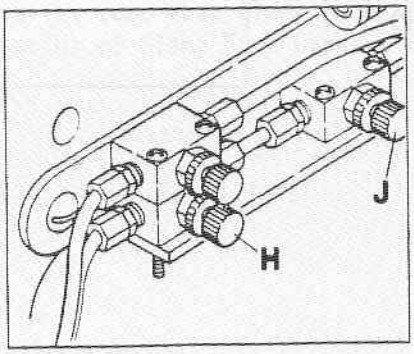

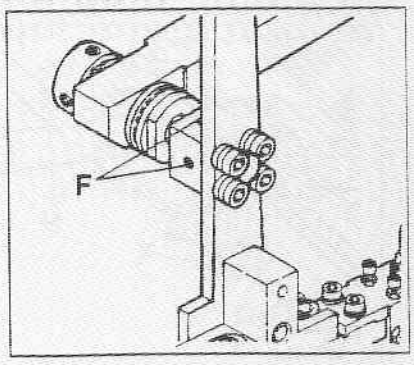

8-14 Adjustment of Needle Thread Mount Block

Adjust Needle Thread Mount(C) so that its tip(c) does not come out of the thickness(L) of Patch Guide without interfering Center Knife(G).
Loosen Screw(M) to adjust it.

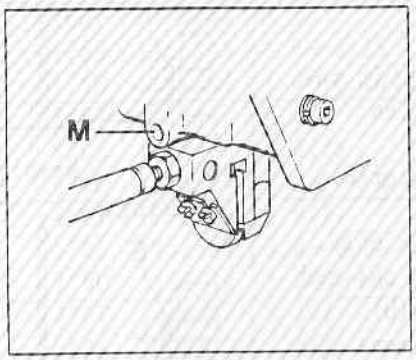

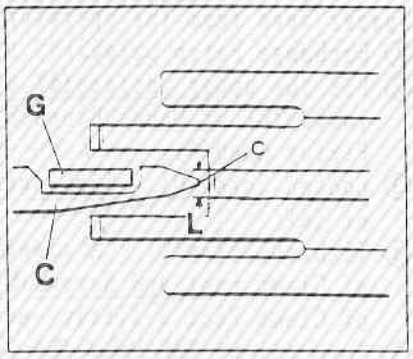

8-15 Adjustment of Jumping Guide

☆ Height of Jumping Guide

The standard clearance between the surface of Patch Guide(Lower and Jumping Guide is 1.5mm.
As the material becomes thicker, the clearance should be larger.
To increase the clearance, loosen Nuts(A) and screw in Screws(B).
To decrease, screw it out. Lower the needle to the lowest position.
Adjust so that Jumping Guide does not hit Needle Head when Jumping Guide is raised manually. Nuts(C) and turn Spring Plungers(D) to adjust it.
Right and left clearance between needle should be equal.
Loosen Screws(E) of Jumping Block to adjust it.

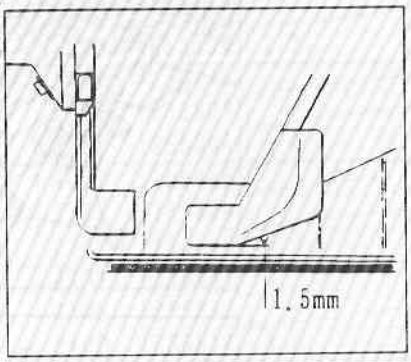

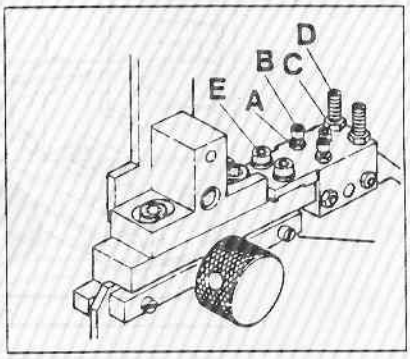

☆ Right/Left position of Jumping Guide

Loosen Nuts(F) and turn Adjusting Screws(G) to move Jumping Guide smoothly without right and left gap.

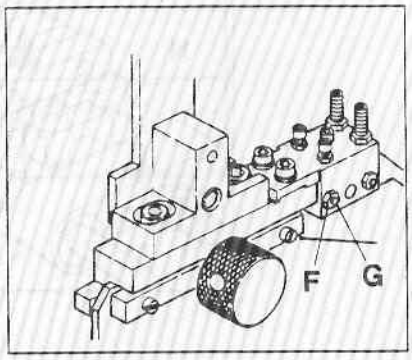

8-16 Conversion between Single, Double and Both Welting

The right figure shows the position of Patch Guide for single, double and both welting and Clamp Foot Spacer seen from the operator's side.

① Exchange Patch Guide.

② Fit the upper surface(a) of Patch Guide(A) in the inside(b) of Mount Block(B) evenly. Tighten Fixing Knob(C).

③ Loosen Screw(D). Exchange Clamp Foot Spacer(E) or (e).

④ Tighten Screw(D). A clearance between the hole of Clamp Foot and Screws(D) exists. Lift the end of Clamp Foot a little, and tighten Screw(D).

⑤ Turn air of TAC Valve(O) and (P) off. Remove Brush Blade Spacer(N).

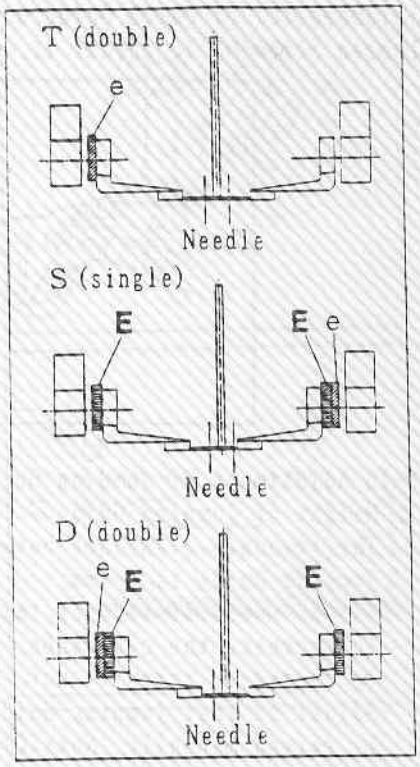

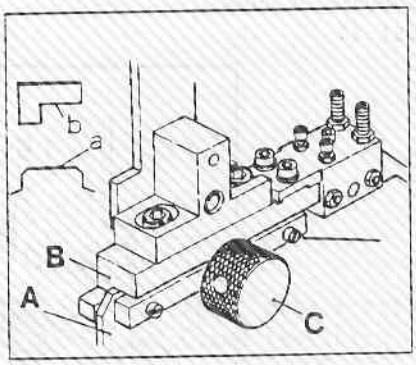

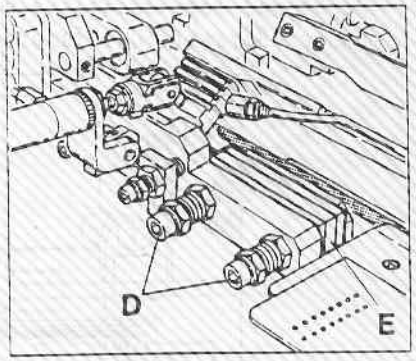

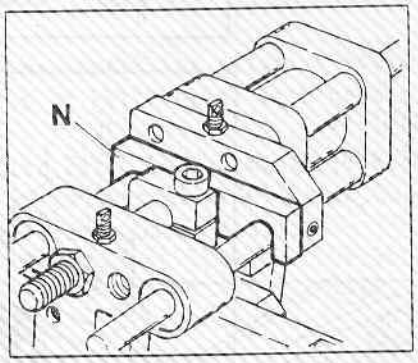

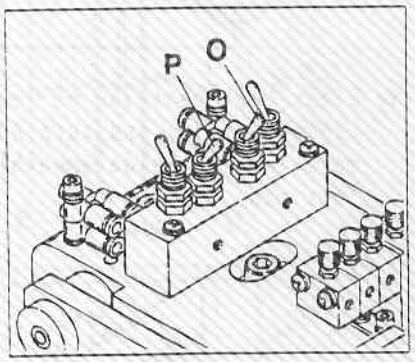

Bite Size	Welting	Patch Guide C. Set Kind	No.	Clamp Foot Spacer(Left) thickness, ( )Qty.	Clamp Foot Spacer(Right) thickness, ( )Qty.
10	T	260T	1256444	3.25	
	S	175S	1255803	1.0+3.25	1.0+3.25(2)
	D	175D	1255804	1.0+3.25(2)	1.0+3.25
12	T	340T	1256445	4.5	
	S	220S	1255807	3.0(2)	3.0(2)+4.5
	D	220D	1255808	3.0(2)+4.5	3.0(2)
14	T	400T	1256446	3.0(2)	
	S	270S	1255809	3.0+3.5	3.0(3)+3.5
	D	270D	1255810	3.0(3)+3.5	3.0+3.5
16	T	470T	1256447	3.5(2)	
	S	310S	1255813	4.0(2)	3.5(2)+4.0(2)
	D	310D	1255814	3.5(2)+4.0(2)	4.0(2)
18	T	530T	1256382	4.0(2)	
	S	350S	1255815	4.5(2)	4.0(2)+4.5(2)
	D	350D	1255816	4.0(2)+4.5(2)	4.5(2)
20	T	590T	1256384	4.5(2)	
	S	390S	1255817	3.0+3.5(2)	3.0+3.5(2)+4.5(2)
	D	390D	1255818	3.0+3.5(2)+4.5(2)	3.0+3.5(2)

Bite Size	Welting	Patch Guide C. Set Kind	No.	Brush Blade Spacer(Left) thickness, ( )Qty.	Brush Blade Spacer(Right) thickness, ( )Qty.
10	T	260T	1256444		
	S	175S	1255803		3.2(2)
	D	175D	1255804	3.2	3.2
12	T	340T	1256445		
	S	220S	1255807		6.0(2)
	D	220D	1255808	6.0	6.0
14	T	400T	1256446		
	S	270S	1255809		6.0(2)
	D	270D	1255810	6.0	6.0
16	T	470T	1256447		
	S	310S	1255813		8.0(2)
	D	310D	1255814	8.0	8.0
18	T	530T	1256382		
	S	350S	1255815		8.0(2)
	D	350D	1255816	8.0	8.0
20	T	590T	1256384		
	S	390S	1255817		10.0(2)
	D	390D	1255818	10.0	10.0

8-17 Adjustment at the exchange of Patch Guide

See the following table.

Bite Size	Type of Patch Guide	Clearance X(right -left)	Clearance Y (left)	Clearance Z (right)	Clamp Foot Spacer (Left)(Right)	Brush Blade Spacer (Left)(Right)
10mm	175S	Adjust	0	0	See 8-16	See 8-16
12	220S	〃	3.5mm	3.5mm		
14	270S	〃	7.25mm	7.25mm		
16	310S	〃	11.25mm	11.25mm		
18	350S	〃	14.75mm	14.75mm		
20	390S	〃	18.25mm	18.25mm		

Note 1 : Even if the kind of Patch Guide is D or S, X, Y and Z of the clearance are the same as the above.

Note 2 : The standard dimension of clearance(X) is 2.05mm.

☆ Adjustment of Clearance(X)
Loosen Lock Nuts(F), Adjusting Screws(G) and Screws(D).
Adjust the clearance between Clamp Foot Connecting Arm(H) and Clamp Foot Spacer(E) according to the thickness of fabric.

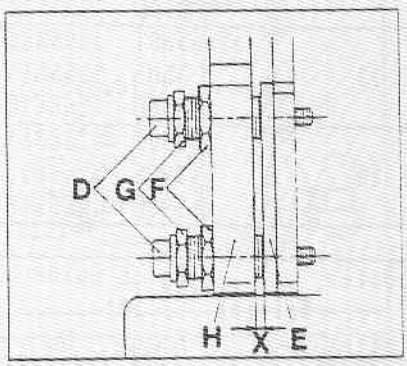

☆ Adjustment of Clearance(Y) and (Z)
Loosen Screws(I) of Clamp Foot Shaft and Screws(J) of Clamp Foot Positioner.
Adjust the clearance between Clamp Arm(K) and Carriage Block(L).

8-18 Adjustment at the exchange Needle Bite Size

To change the needle bite size, follow the next procedure :

① Loosen Screws(I) of Clamp Foot Shaft and Screws(J) of Clamp Foot Positioner.
Adjust the clearance(Y)(Z) between Clamp Arm(K) and Carriage Block(L). (See 8-17)

② See Illustrated Parts Manual to P.29.
Exchange it for parts for the corresponding needle bite.

③ Make a trial sewing. Check a sewing performance and movement of each parts.

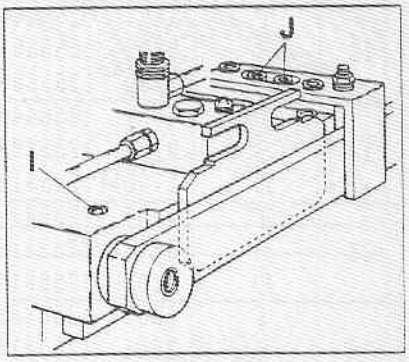

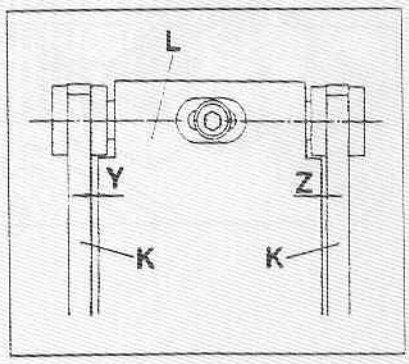

☆ Application of Clamp Foot Positioning Gauge
Insert Gauge(M) between Clamp Foot Arm(K) and Carriage Block(L).
Tighten Screw(I),(J) not to make a clearance.

Note : According to the needle bite size and the width of Patch Guide, Gauge(M) should be exchanged. See the following table.
Please order them specially, if you need.

Thickness	Parts No.	Thickness	Parts No.
2.0mm	0015434	3.5mm	0015437
2.5mm	0015435	4.0mm	0015438
2.75mm	0014801	4.5mm	0014802
3.0mm	0015436	8.0mm	0015439

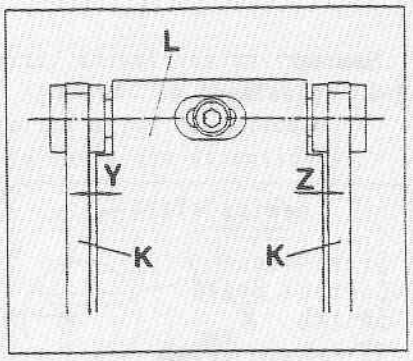

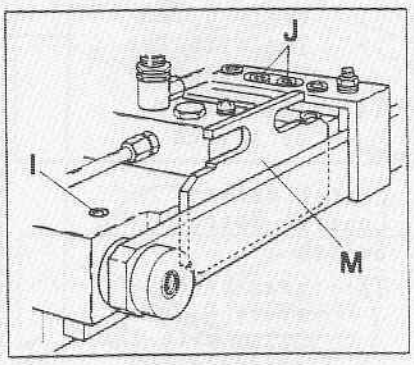

8-19 Adjusting Needle Bar Stopping Mechanism

Follow the next procedure.

① Align the red mark(A) on Sewing Head with the white mark(B) Machine Pulley.
② Loosen Screw(C). Make the width of the round tip of Needle Bar Stop Lever against the width of Slide Lock(E) same. Tighten Screw (C).
③ Loosen Screw(F). Move Slide Block(E) to right and left with Needle Bar Stop Lever(D). Determine the position to the center of it.
④ Make a clearance between Needle Bar Stop Lever(D) and Slide Block(E) 1mm. Tighten Screw(F).

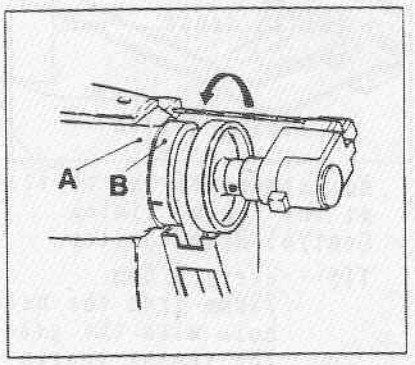

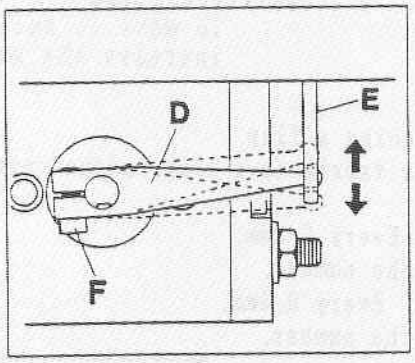

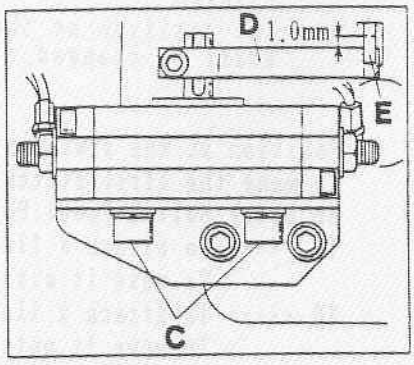

9. Sewing

9-1 Adjustment of Sewing

sewing start

same clearance

Start dense
Control Board
Switch

T3···seam pitch
every 0.1mm
1mm with the
graduation 5

T4···the number
of stitch

Center dense
Control Board
Switch

T5···seam pitch
every 0.2mm
2.2mm with the
graduation 3

finish dense

sewing finish

Adjustment of the position
at the sewing finish
Control Board Switch

T15···every 0.5mm
230mm from the needle drop
hole with the graduation 8
The sewing length is not
changed.
The position at the sewing
start is changed.

Position of Tab Knife at the
sewing start
If the adjustment with
Tab Knife Counter on Control
Panel is not enough, adjust
with Nut and Bolt.
To move it outside, increase
the(X) length.

X

Tab Knife

Position of Tab Knife at the
sewing start Lower Switch
Panel Board

T2···every 1mm
To move it outside,
increase the number.

Center Knife

Postiton of Center Knife at
the sewing
Lower Switch Panel Board

T3···every 1mm
To move it outside,
increase the number.

Tab Knife

The position of Tab Knife
at the sewing finish
If the adjustment with
Tab Knife Counter on Control
Panel is not enough,
adjust it with T6 of Control
Board Switch.

T6···every 1mm
To move it outside,
increase the number.

☆ Position at the sewing start when attaching a flap
To make the first stitch crossed from a fabric to a flap, adjust with T5 and T6 on Lower Switch Panel Board.

T5 ····· To attach a flap to the left. Every 0.5mm.
To move it outside, increase the number.

T6 ····· To attach a flap to the right. Every 0.5mm.
To move it outside, increase the number.

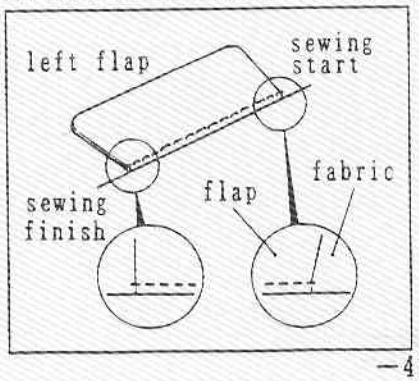

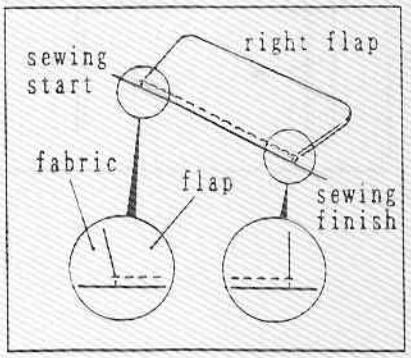

☆ Position at the sewing finish when attaching a flap
To make the last stitch crossed from a flap to a fabric, adjust the position of Stop Guide.
When the stitch does not cross, move Stop Guide(F) to the arrow direction(X).
When too many stitches are made, move Stop Guide(F) to the arrow direction(Y).

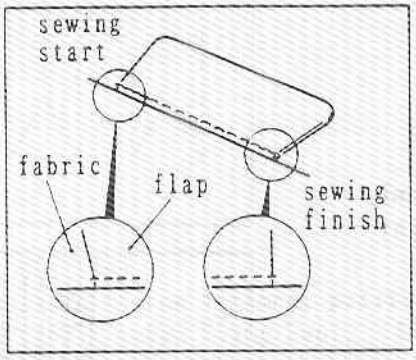

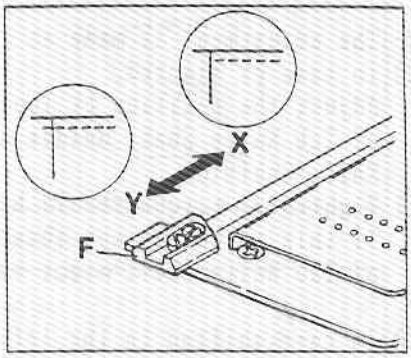

9-2 Positoning of Flap Gauge

According to the width of flap, fit the holes of Flap Gauge in the pins of Cover Plate. Two lines of holes enable you to adjust it by 2mm.

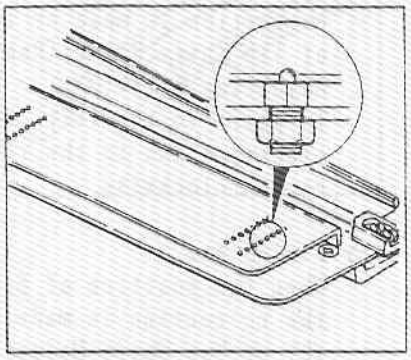

9-3 Adjustment of Tab Knife position

① Standard position.
② In case of slanted.
③ In case of shifted to the left or the right.

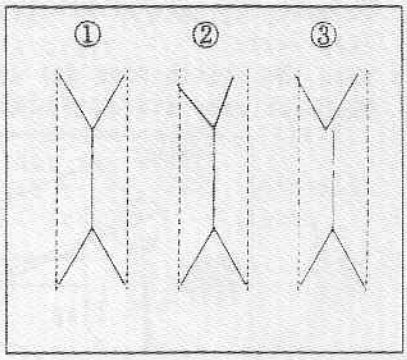

☆ The adjustment is made as follows:

② In case of slanted.
Adjust the position by loosening Screw(A) of Tab Knife Shaft Holder and turning Tab Knife Shaft(B).

※ Tightening torque should be 12N·m(120kgf·cm). If this torque is not observed, the movement of Tab Knife Shaft might become heavy.

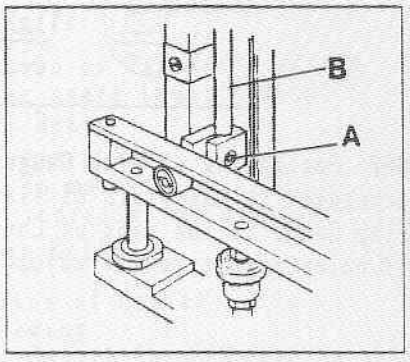

③ In case shifted to the left or to the right

☆ Start end
When the position of start end is shifted, correction is made by loosening Screws(C) of Tab Knife Holder(Rear) and turning Adjusting Screw(D).
To shift to the left, turn Screw(D) clockwise and to the right, turn it counterclockwise.

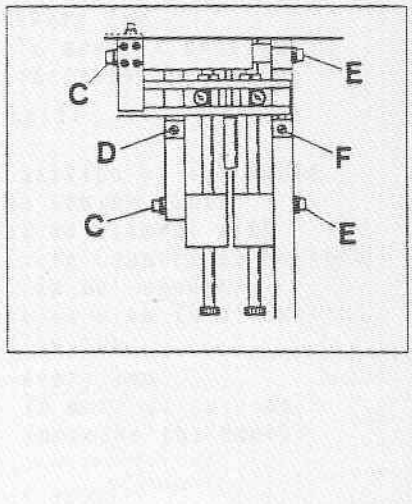

☆ Finish end
When the position of finish end is shifted, the correction is made by loosening Screws (E) of Tab Knife Holder(Front) and turning Adjusting Screw(F).
To shift to the left, turn Screw(F) clockwise and to the right, turn it counterclockwise.

9-4 Adjustment of Optical Sensor

☆ Front/rear position

Loosen Screw(A).

Make the standard distance from the center of needles to that of optical axes(red points) 25mm.

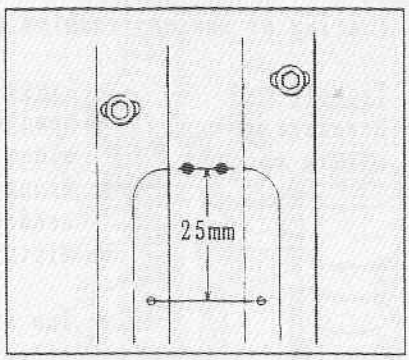

☆ Right/left position

① Move Carriage to the foremost position.
② Put the fabric under Clamp Foot.
③ Lower Clamp Foot.
④ Lower Patch Guide. (Brush Blade closes.)
⑤ Put a flap on the fabric.
⑥ Lower Flap Clamp.
⑦ Press Emergency Stop Switch.
⑧ Light the optical axes of Optical Sensor to Reflective sheet of Brush Blade.
Loosen Screw(A) to adjust it.

Note : Make sure that Flap Clamp does not intercept the optical axes and the distance between the center of needles and the center of the optical axes is 25mm.

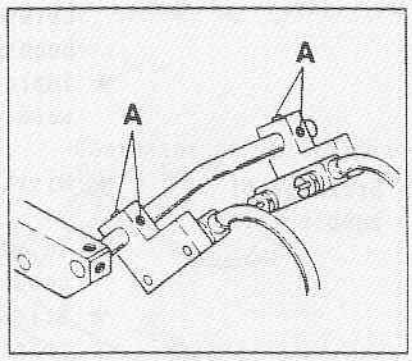

☆ Sensitivity Adjustment of Optical Sensor

① Check the above 'Front/rear position' and 'Right/left position' again.
② Turn Variable Resistor(C) of Amplifier Unit(B) in Power Source Box to the counterclockwise. A white lamp(D) light to be red.
③ When turning it to the clockwise slowly, the white lamp(D)is put off.
④ When turning it to the clockwise, a red lamp (E) lights.
⑤ When turning it to the clockwise again, the white lamp(D) lights to be green. Stop Variable Resistor(C) at this position. Sensitivity adjustment is finished.
⑥ Check Optical Sensor Press REAR of Clamp Foot Switch to move Carriage to the hind gradually. When Optical Sensor detects the end of a flap, the red lamp(E) is put off and the white lamp changes from green into red. The adjustment is completed.

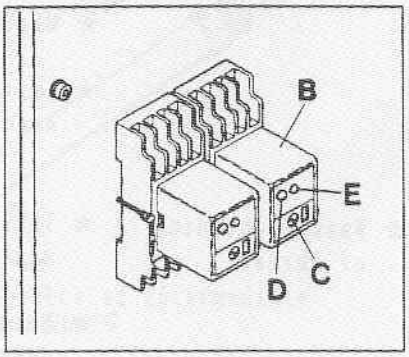

10. Listing of sewing troubles and their correction

Trouble	Cause	Correction
☆ Breakage of needle thread	★ Needle distortion, blunt needle point	★ Replace needle.
	★ Wrong installation of needle	★ Correct the installation.
	★ Misthreading	★ See standard threading.
	★ Too strong tension of needle thread	★ See paragraph of of sewing performance.
	★ Improper clearance between Rotary Hook and Bobbin Case Opener	★ See paragraph of timing between needle and Rotary Hook.
	★ Improper timing between needle and Rotary Hook	★ See paragraph of timing between needle and Rotary Hook.
☆ Breakage of bobbin thread	★ Misthreading	★ See the standard threading.
	★ To strong tension of bobbin thread	★ Readjust to the correct tension.
	★ Sticking of oil and chips on Bobbin Case	★ Remove chips and wipe off the oil.
☆ Uneven stitches	★ Needle distortion, blunt needle point	★ Replace needle.
☆ Skip stitches	★ Needle distortion and blunt needle point	★ Replace needle.
	★ Wrong installation of needles	★ See paragraph of Installing Needles.
	★ Misthreading	★ See paragraph of Threading needle thread.
	★ Improper timing between needle and Rotary Hook	★ See paragraph of Adjustment of Timing between Needle and Rotary Hook.
☆ Weak tightening of thread	★ Thread Take-up Spring is weak or its actuating range is too narrow	★ See paragraph of Sewing Performance.
	★ Weak needle thread tension	★ 〃 〃
	★ Weak bobbin thread tension	★ 〃 〃
☆ Needle breakage	★ Wrong installation of needle	★ See paragraph of Installation of Needle
	★ Needle distortion, blunt needle point	★ Replace needle.
	★ Improper timing between needle and Rotary Hook	★ See paragraph of Adjustment of Timing between Needle and Rotary Hook.

11. Connection of Devices to Air Supply

☆ Connect vinyl tubes of each devices to Panel Connector ①~④ as shown in the illustration.

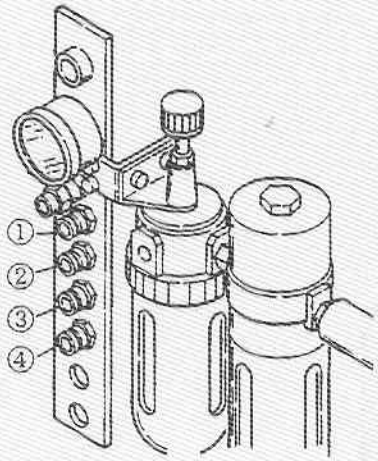

11-1 Trouser Stacker(SA09)

Set Switch T10 on control Board in Power Box to '0, and turn ON S4 on Lower Switch Panel Board.

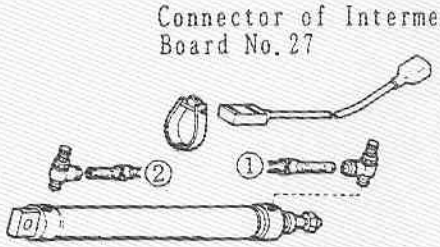

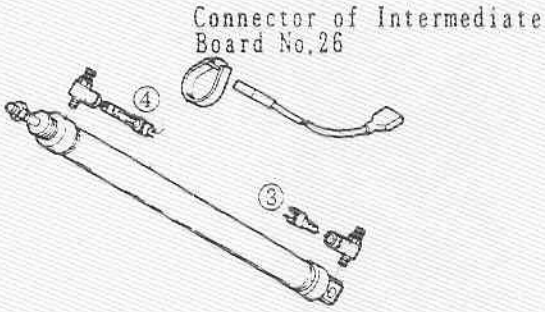

11-2 Work Remover(SA12)

Set Switch T10 on Control Board in Power Box to '1', and turn ON S4 on Lower Switch Panel Board.

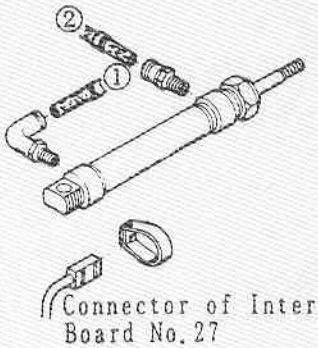

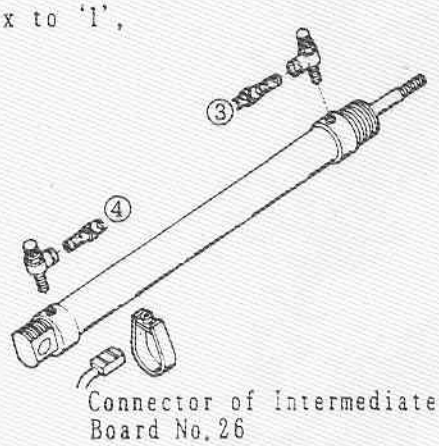

11-3 Air Ejector(SA03)

Set Switch T10 on Control Board in Power Box to '2', and turn ON S4 on Lower Switch Panel Board.
The operating time is adjusted by Switch T2 on Control Board.

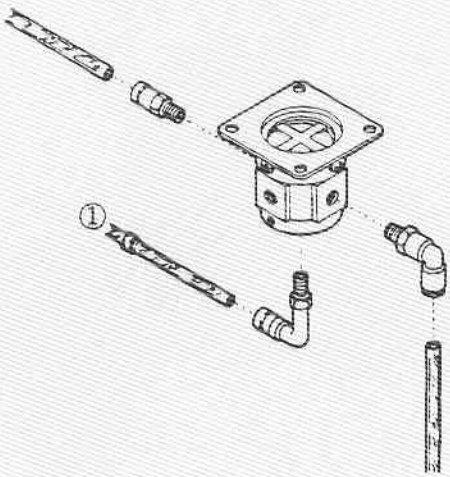

CONTENTS

1

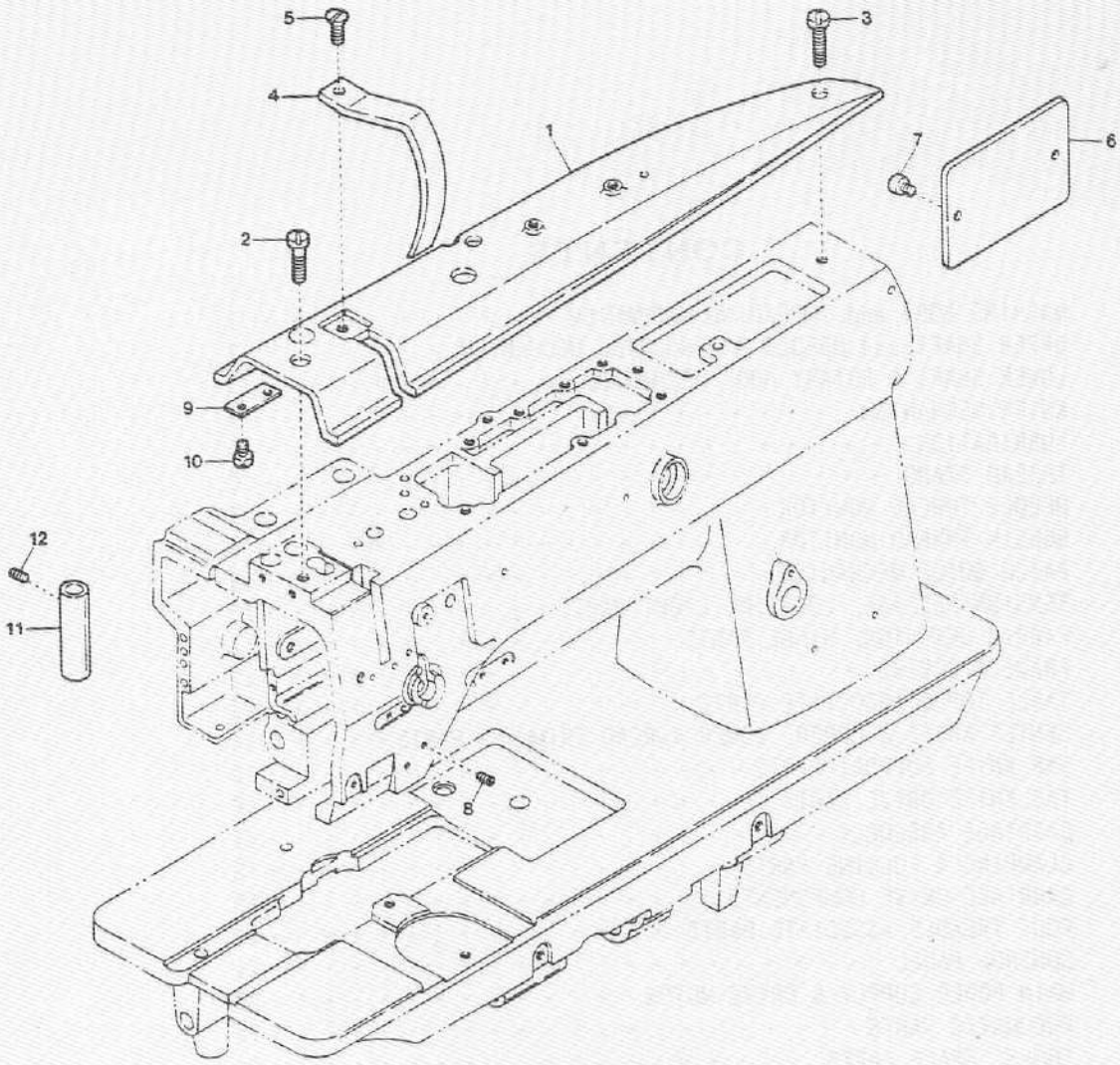

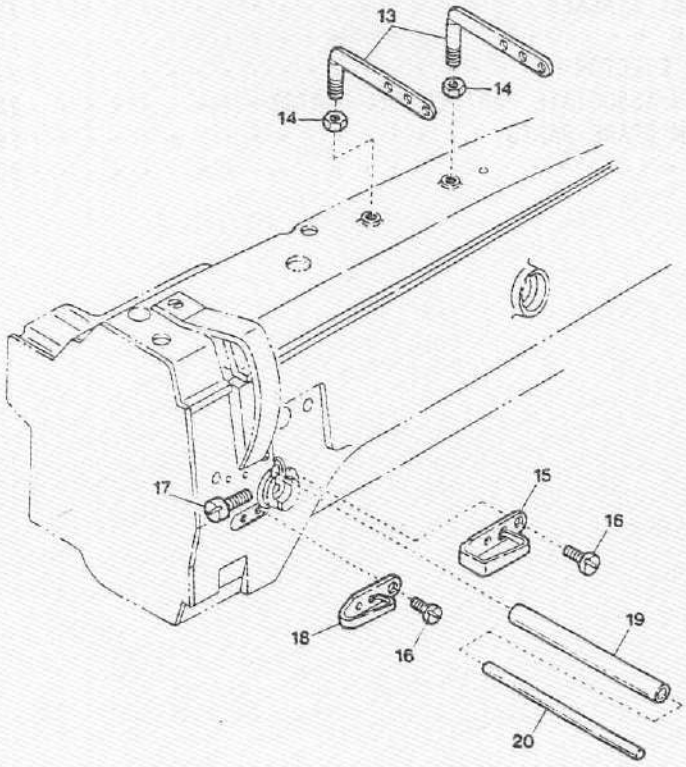

MACHINE BODY and THREADING MECHANISM

Det. No	Parts. No	Description
1	38-1900-0-030	Arm Top Cover
2	38-1000-8-200	Screw(4.37-40×16)
3	38-1000-8-201	Screw(4.37-40×16)
4	38-1001-5-000	Thread Take-up Cover
5	38-1092-0-000	Screw(4.76)
6	38-1900-0-032	Rear Cover
7	38-1000-8-202	Screw(3.57-40×6)
8	38-1000-8-245	Screw(4.37)
9	38-1900-0-033	Supplementary Arm Top Cover
10	38-1092-0-001	Screw(3.18-40×4)
11	38-1001-5-054	Presser Bar Bushing (Upper)
12	38-1000-8-289	Screw(5.95)
13	38-1001-5-003	Top Cover Thread Guide
14	38-1000-8-252	Nut(5.95)
15	38-1001-5-020	Arm Thread Guide (Upper)
16	38-1000-8-229	Screw(3.57)
17	38-1000-8-203	Screw(3.57)
18	38-1001-5-021	Arm Thread Guide (Center)
19	38-1001-5-022	Pipe
20	38-1001-5-023	Tension Release Bar

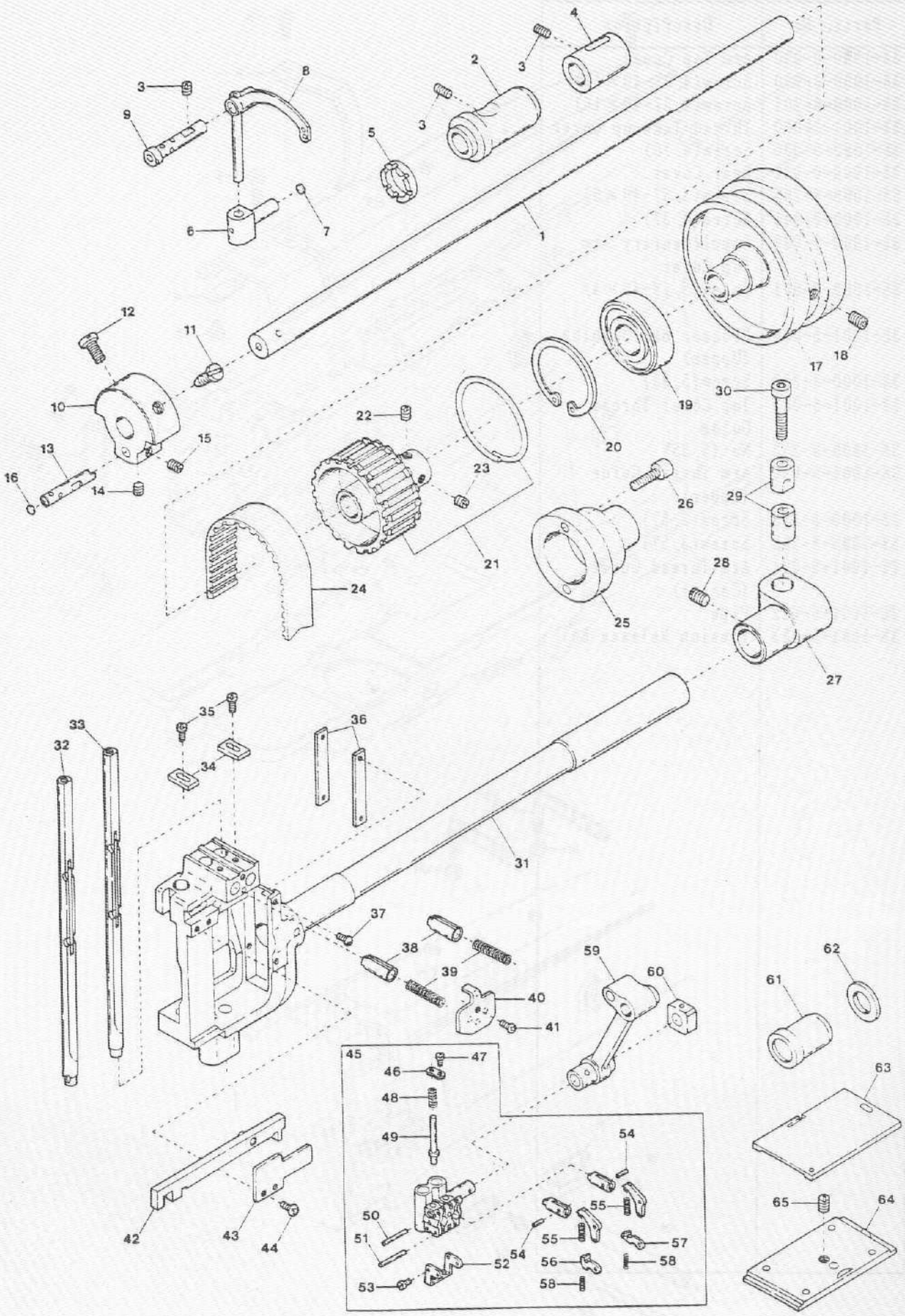
1
2
3
4
5
6
7
8
9
10
11
12
13
14
15
16
17
18
19
20
21
22
23
24
25
26
27
28
29
30
31
32
33
34
35
36
37
38
39
40
41
42
43
44
45
46
47
48
49
50
51
52
53
54
55
56
57
58
59
60
61
62
63
64
65

Det. No	Parts. No	Description
1	38-1900-0-034	Upper Shaft
2	38-1900-0-035	Upper Shaft Bushing (Left)
3	38-1000-8-233	Screw(5.95)
4	38-1001-5-037	Upper Shaft Bushing (Center)
5	38-1001-5-034	Thrust Ring
6	38-1900-0-127	Thread Take-up Lever Slide Block
7	38-1001-5-030	Pusher
8	38-1900-0-128	Thread Take-up
9	38-1900-0-129	Stud
10	38-1001-5-033	Counter Weight
11	38-1000-8-205	Screw(7.14)
12	38-1000-8-206	Screw(7.14)
13	38-1900-0-036	Needle Bar Crank
14	38-1092-0-002	Screw(6.35)
15	38-1000-8-235	Screw(6.35)
16	38-1900-0-040	Pusher
17	38-1900-0-039	Pulley
18	38-1092-0-003	Screw(5.95-28×14)
19	38-1001-5-041	Bearing(6204 VV)
20	38-1001-5-040	Stop Ring(C)
21	38-1001-5-039	Timing Belt Wheel (Upper) Assembly
22	38-1000-8-236	Screw(6.35×12)
23	38-1000-8-237	Screw(6.35×12)
24	38-1001-5-038	Timing Belt
25	38-1900-0-052	Coupling Joint
26	38-1092-0-006	Screw(4.76-32×14)
27	38-1900-0-050	Needle Bar Rock Shaft Stop
28	38-1092-0-005	Screw(6.35)
29	38-1001-5-184	Pinch Sleeve
30	38-1000-9-753	Screw(M6×30)
31	38-1125-6-421	Needle Bar Rock Shaft
32	38-1900-0-125	Needle Bar(Left)
33	38-1900-0-126	Needle Bar(Right)
34	38-1900-0-116	Needle Bar Rotary Stopper
35	38-1092-0-023	Screw(3.18)
36	38-1900-0-123	Guide Plate
37	38-1900-8-230	Screw(2.38)
38	38-1900-0-118	Needle Bar Stopper
39	38-1900-0-119	Needle Bar Stopper Spring
40	38-1900-0-120	Spring Lid

Det. No	Parts. No	Description
41	38-1092-0-026	Screw(3.18-40×5)
42	38-1125-6-423	Slide Block
43	38-1900-0-117	Slide Block Guide Plate
44	38-1000-8-207	Screw(3.57-40×8)
45	38-1900-0-124	Needle Bar Clamp Assembly
46	38-1900-0-153	Release Pin Lid
47	38-1092-0-027	Screw(2.38)
48	38-1900-0-152	Release Pin Spring
49	38-1900-0-151	Release Pin
50	38-1900-0-145	Pin(2×15.8)
51	38-1900-0-148	Pin(2×17.8)
52	38-1900-0-150	Spring Holder
53	38-1092-0-028	Screw(2.38)
54	38-1900-0-143	Pin(1.5×5.8)
55	38-1900-0-144	Spring
56	38-1900-0-146	Clutch Stopper(L)
57	38-1900-0-147	Clutch Stopper(R)
58	38-1900-0-149	Spring
59	38-1900-0-121	Needle Bar Crank Rod
60	38-1900-0-122	Needle Bar Guide Slide Block
61	38-1900-0-048	Needle Bar Rock Shaft Bushing(Left)
62	38-1900-0-051	Spacer
63	38-1001-5-025	Slide Plate(Right)
64	38-1900-0-049	Slide Plate Front Assembly
65	38-1900-8-238	Screw(5.16)

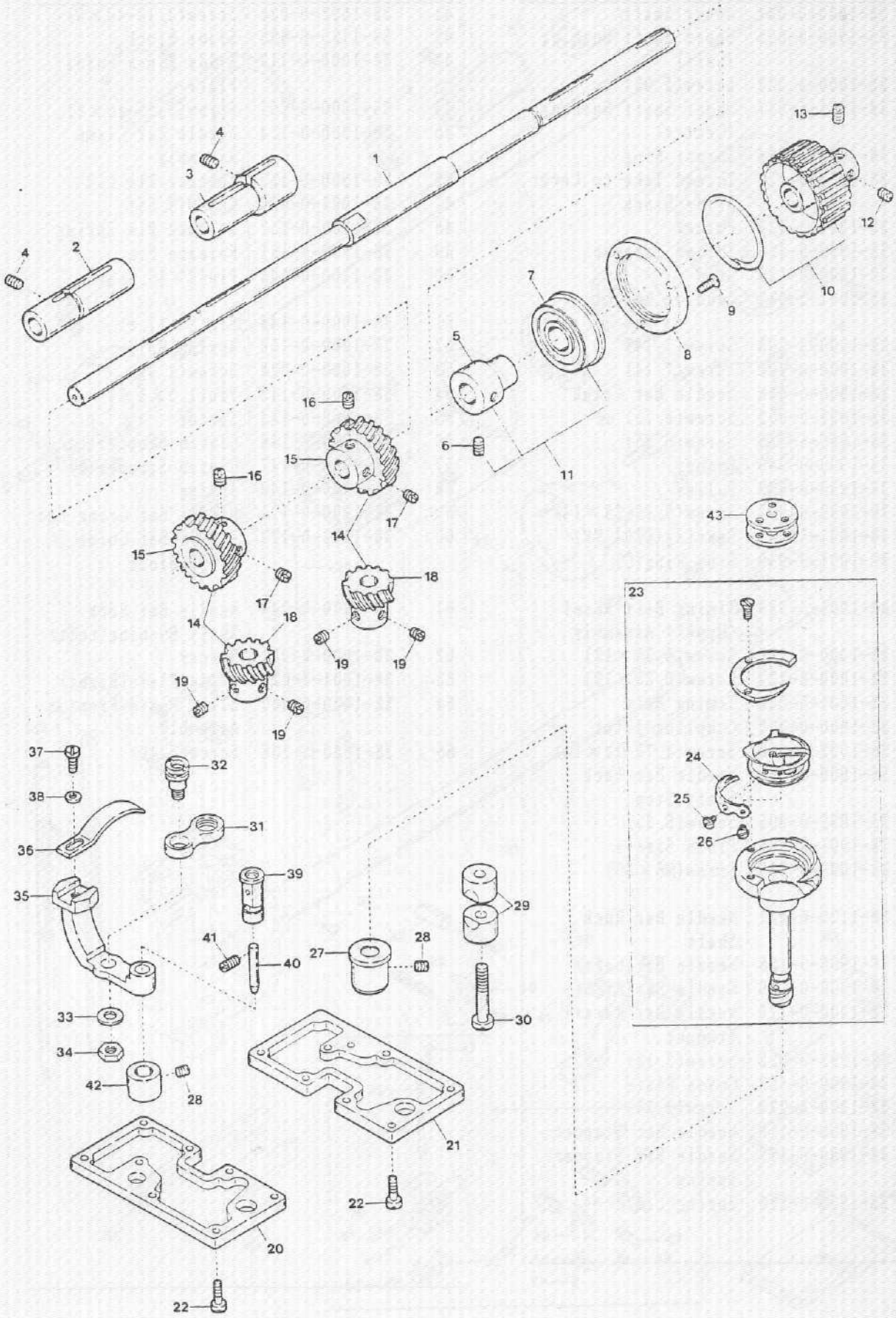
1
2
3
4
4
5
6
7
8
9
10
11
12
13
14
14
15
15
16
16
17
17
18
18
19
19
19
19
20
21
22
22
23
24
25
26
27
28
28
29
30
31
32
33
34
35
36
37
38
39
40
41
42
43

Det. No	Parts. No	Description
1	38-1001-5-059	Lower Shaft
2	38-1001-5-060	Rotary Hook Base Bushing(Left)
3	38-1001-5-061	Rotary Hook Base Bushing(Right)
4	38-1000-8-239	Screw(5.95)
5	38-1001-5-062	Bearing Holder
6	38-1000-8-242	Screw(6.35×7)
7	38-1001-5-063	Bushing
8	38-1001-5-065	Presser
9	38-1092-0-007	Screw(3.57×12)
10	38-1001-5-066	Timing Belt Wheel (Lower) Assembly
11	38-1001-5-064	Bearing Holder Assembly
12	38-1000-8-237	Screw(6.35×12)
13	38-1000-8-236	Screw(6.35×12)
14	38-1900-0-053	Spiral Gear Assembly
15	38-1900-0-054	Spiral Gear
16	38-1000-8-243	Screw(6.35)
17	38-1000-8-235	Screw(6.35)
18	38-1900-0-055	Pinion
19	38-1000-8-234	Screw(6.35)
20	38-1001-5-084	Oil Reservoir(Left)
21	38-1001-5-088	Oil Reservoir(Right)
22	38-1000-8-208	Screw(4.76)
23 *	38-1125-5-705	Outer Rotary Hook Assembly
24	38-1001-5-078	Tension Adjusting Spring
25	38-1000-8-209	Tension Adjusting Screw
26	38-1000-8-210	Screw
27	38-1001-5-075	Rotary Hook Shaft Bushing(Upper)
28	38-1000-8-240	Screw(4.76)
29	38-1001-5-076	Pinch Sleeve
30	38-1092-0-008	Screw(5.95)
31	38-1001-5-070	Opener Link
32	38-1001-5-071	Link Stud Opener
33	38-1000-8-257	Washer(4.76)
34	38-1093-0-000	Nut
35	38-1001-5-069	Opener Crank
36	38-1001-5-068	Bobbin Case Opener
37	38-1000-8-207	Screw(3.57-40×8)
38	38-1093-0-001	Washer
39	38-1001-5-072	Opener Crank Stud
40	38-1001-5-073	Pipe
41	38-1000-8-241	Screw(4.76)
42	38-1001-5-074	Rotary Hook Shaft Bushing(Lower)
43	38-1125-6-470	Bobbin

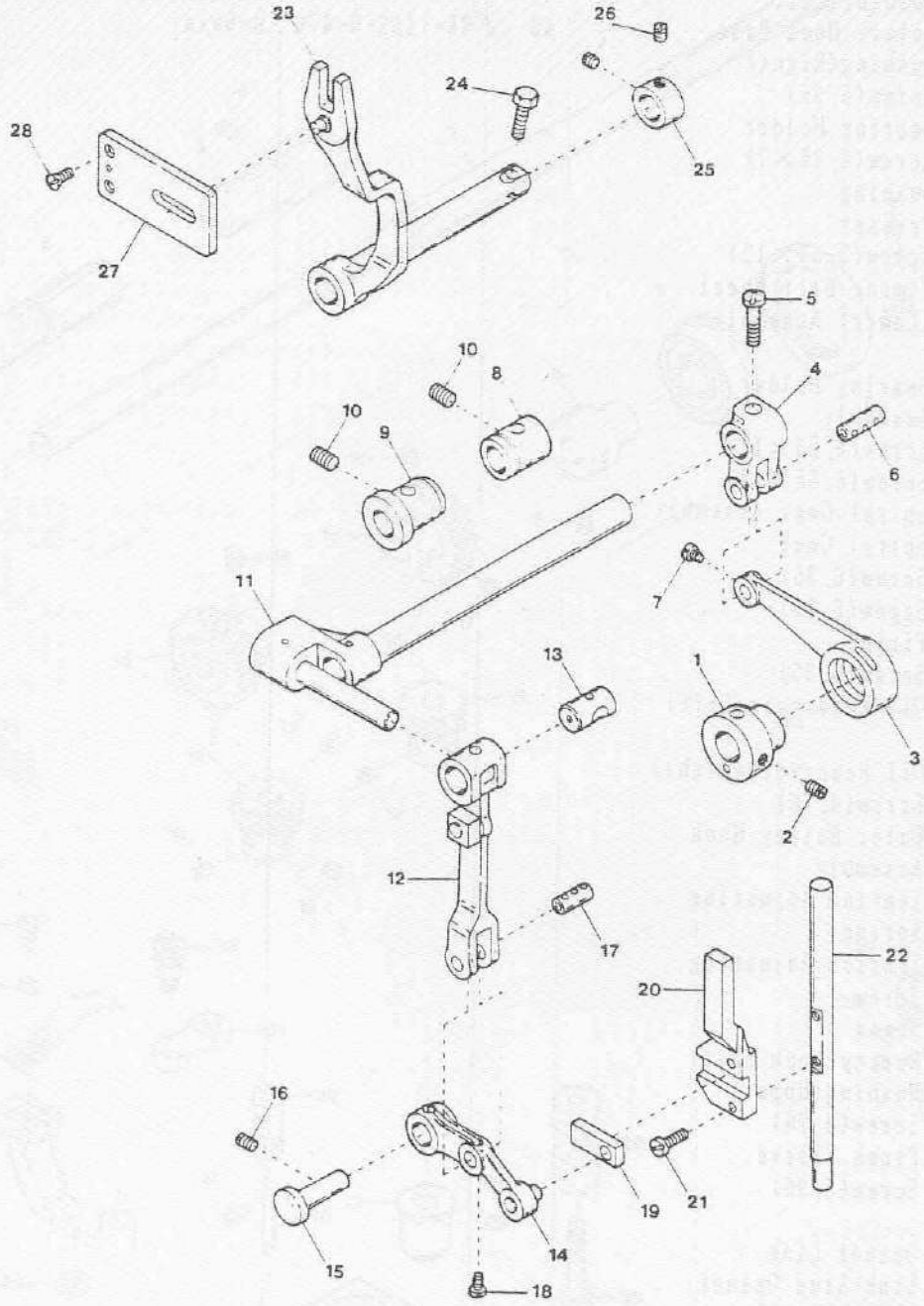
23
26
24
28
25
27
5
10
8
4
10
9
6
7
11
13
1
3
2
12
17
22
20
16
19
21
15
14
18

Det. No.	Parts. No.	Description
1	38-1900-0-067	Eccentric Wheel
2	38-1092-0-010	Screw(5.95)
3	38-1900-0-069	Center Knife Connecting Lever
4	38-1900-0-070	Center Knife Rock Arm
5	38-1092-0-011	Screw(5.56-32×16)
6	38-1900-0-071	Stud
7	38-1092-0-012	Screw(3.18)
8	38-1900-0-072	Rock Shaft Bushing (Right)
9	38-1900-0-073	Rock Shaft Bushing (Left)
10	38-1092-0-013	Screw(5.95)
11	38-1900-0-074	Center Knife Rock Shaft Assembly
12	38-1900-0-075	Connecting Rod Assembly
13	38-1900-0-076	Slide Block Driving Stud
14	38-1125-6-420	Center Knife Connecting Lever
15	38-1900-0-078	Connecting Lever Shaft
16	38-1092-0-015	Screw(5.95)
17	38-1900-0-079	Stud
18	38-1092-0-016	Screw(3.18)
19	38-1900-0-047	Center Knife Bar Block
20	38-1900-0-142	Knife Bar Guide
21	38-1000-8-207	Screw(3.57-40×8)
22	38-1900-0-045	Center Knife Bar
23	38-1125-6-416	Change Lever Assembly
24	38-1092-0-022	Bolt(4.37)
25	38-1900-0-081	Set Collar
26	38-1092-0-017	Screw(5.95)
27	38-1900-0-082	Change Lever Stop
28	38-1092-0-018	Screw(4.76)

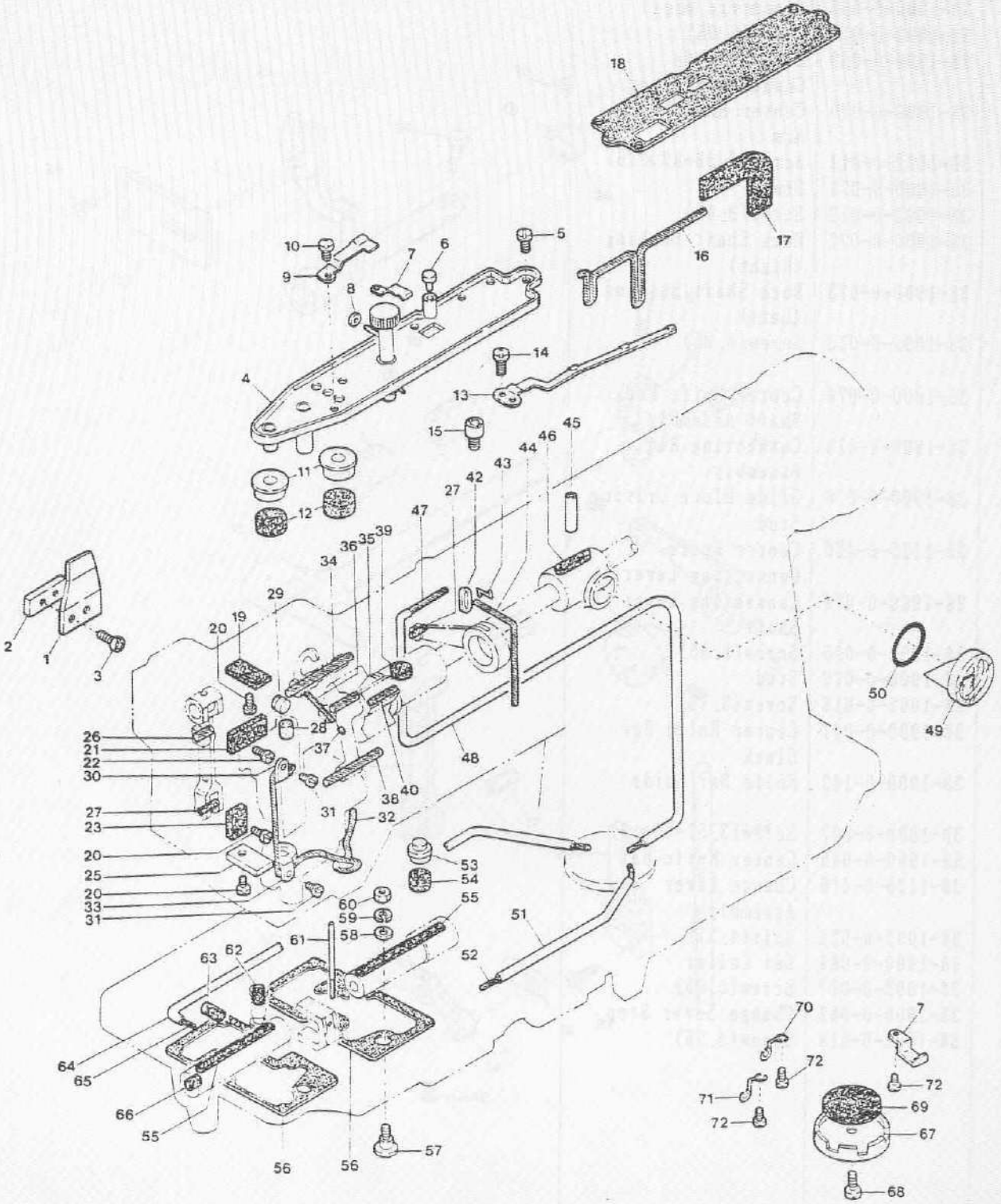
18
17
16
10
9
7
6
5
8
14
4
13
15
45
46
44
43
42
27
11
12
47
36
35
39
34
29
19
20
2
1
3
50
49
26
21
22
30
28
37
48
40
38
27
23
31
32
20
25
20
33
31
53
54
60
59
58
55
51
61
62
63
52
64
65
66
55
56
56
57
70
7
72
72
71
69
72
67
68

Det. No	Parts. No	Description
1	38-1900-0-086	Oil Stop Plate
2	38-1001-5-097	Oil Stop Plate Presser
3	38-1000-8-211	Screw(4.76-32×8)
4	38-1001-5-089	Oil Receiver Plate Assembly
5	38-1000-8-202	Screw(3.57-40×6)
6	38-1001-5-092	Cap for Oil Inlet
7	38-1001-5-091	Felt Presser
8	38-1000-8-261	Washer
9	38-1001-5-090	Spring Plate
10	38-1000-8-216	Screw(3.57-40×4)
11	38-1900-0-097	Oil Cup
12	38-1900-0-098	Felt
13	38-1001-5-094	Wick Holder
14	38-1000-8-212	Screw(3.18)
15	38-1000-8-248	Oil Guide Tube
16	38-1000-8-267	Wick
17	38-1000-8-273	Felt
18	38-1001-5-093	Packing
19	38-1900-0-095	Felt
20	38-1092-0-021	Screw(3.57)
21	38-1000-8-277	Felt
22	38-1000-8-215	Screw(3.57-40×6)
23	38-1900-0-096	Felt
24	.....	.....
25	38-1900-0-093	Oil Stop Plate
26	38-1093-0-003	Wick
27	38-1900-0-099	Felt
28	38-1001-5-043	Needle Bar Cap
29	38-1900-0-101	Cap
30	38-1900-0-089	Wick Support(Upper)
31	38-1092-0-020	Screw(3.18-40×4)
32	38-1000-8-266	Wick
33	38-1900-0-090	Wick Support(Lower)
34	38-1000-8-269	Wick
35	38-1000-8-272	Wick
36	38-1093-0-004	Wick
37	38-1900-0-102	Cap(Rubber)
38	38-1000-8-271	Wick
39	38-1000-8-274	Felt
40	38-1000-8-268	Wick

Det. No	Parts. No	Description
41	.....	.....
42	38-1900-0-092	Oil Shield
43	38-1900-0-091	Clip
44	38-1093-0-002	Wick
45	38-1001-5-073	Pipe
46	38-1000-8-279	Felt
47	38-1000-8-282	Wick
48	38-1001-5-099	Oil Tube
49	38-1001-5-108	Oil Gauge Window
50	38-1001-5-095	Packing(P16)
51	38-1001-5-101	Oil Tube
52	38-1000-8-284	Wick
53	38-1001-5-098	Oil Cap
54	38-1000-8-275	Felt
55	38-1000-8-278	Felt
56	38-1900-0-087	Packing
57	38-1000-8-226	Oil Adjusting Screw
58	38-1000-8-260	Washer
59	38-1000-8-264	Spring Washer
60	38-1000-8-255	Nut(4.37)
61	38-1900-0-088	Oil Gauge
62	38-1000-8-280	Felt
63	38-1000-8-276	Felt
64	38-1001-5-100	Oil Tube
65	38-1000-8-283	Wick
66	38-1000-8-281	Felt
67	38-1001-5-105	Oil Pipe Support
68	38-1000-8-213	Screw(4.76-32×10)
69	38-1000-8-287	Oil Felt
70	38-1001-5-107	Tube Holder
71	38-1001-5-106	Tube Holder
72	38-1000-8-214	Screw(3.57-40×5)

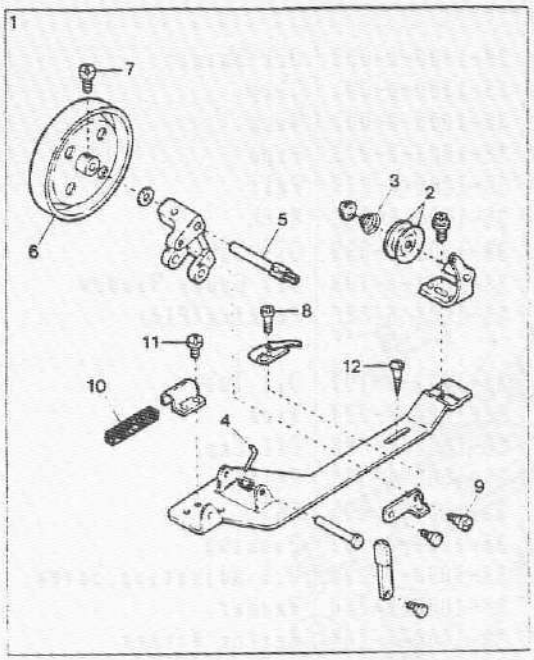
1
7
6
5
3
2
8
11
12
10
4
9

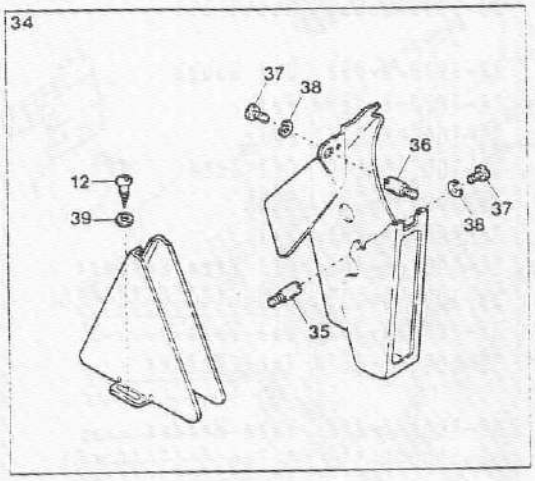
34
37
38
36
12
39
37
38
35

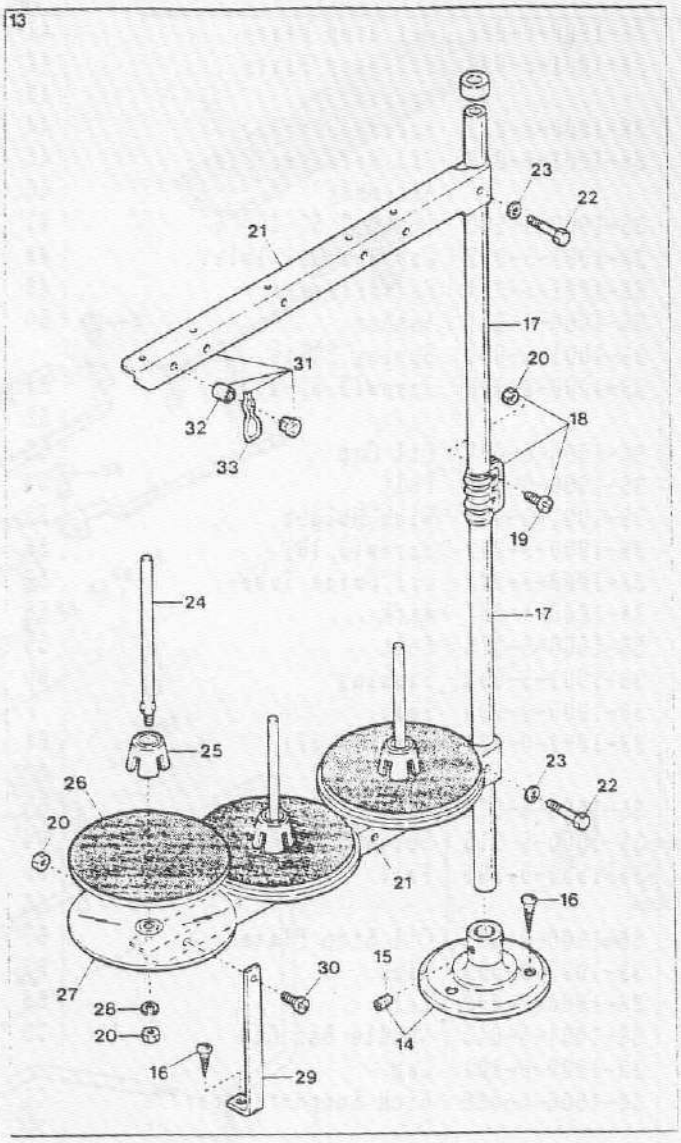
13
23
22
21
17
31
20
32
18
33
19
24
17
25
23
22
26
20
21
16
15
30
27
28
14
20
16
29

THREAD STAND

Det. No	Parts. No	Description
1	38-1001-5-174	Bobbin Winder Assembly
2	38-1001-5-170	Tension Disc
3	38-1001-5-169	Tension Spring
4	38-1001-5-171	Spring
5	38-1001-5-168	Bobbin Winder Shaft
6	38-1001-5-173	Bobbin Winder Wheel Assembly
7	38-1000-8-217	Screw(4.37×5)
8	38-1000-8-218	Screw(3.18)
9	38-1000-8-227	Stud Screw(3.18)
10	38-1001-5-172	Bobbin Winder Wheel Stop
11	38-1000-8-219	Screw(3.57×3.5)
12	38-1000-8-246	Screw(5.5×20)
13	38-1001-5-167	Cotton Stand Assembly 3
14	38-1001-5-166	Cotton Stand Base Assembly
15	38-1000-8-244	Screw(6×7)
16	38-1000-8-247	Screw(4.5×22)
17	38-1001-5-157	Pipe
18	38-1001-5-158	Joint for Cotton Stand
19	38-1000-8-220	Screw(5×14)
20	38-1000-8-251	Nut
21	38-1001-5-164	Spool Holder
22	38-1000-8-221	Bolt(5×28)
23	38-1000-8-262	Washer
24	38-1001-5-159	Spool Shaft(B)
25	38-1001-5-160	Spool Cushion
26	38-1001-5-161	Spool Mat
27	38-1001-5-162	Spool Stand Base
28	38-1000-8-265	Spring Washer
29	38-1001-5-163	Spool Holder Support(A)
30	38-1000-8-222	Screw(5×10)
31	38-1001-5-156	Thread Hanger Assembly 3
32	38-1001-5-181	Thread Bushing
33	38-1001-5-182	Thread Guide Spring
34	38-1001-5-175	Belt Cover Assembly
35	38-1000-8-249	Belt Cover Stud(B)
36	38-1000-8-250	Belt Cover Stud(D)
37	38-1000-8-223	Screw(4.37-40×8)
38	38-1000-8-264	Spring Washer
39	38-1000-8-263	Washer

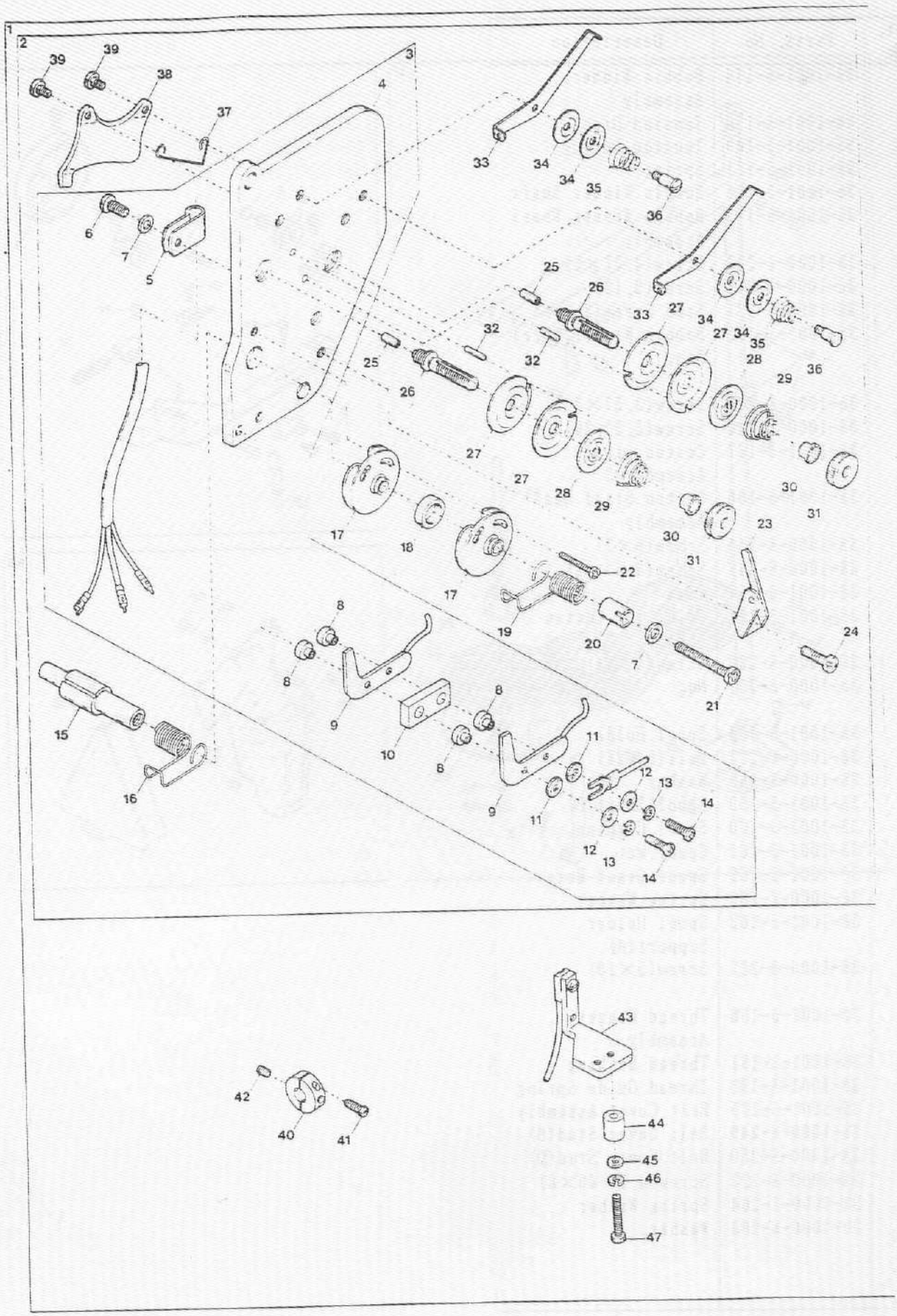
1
2
3
4
5
6
7
8
9
10
11
12
13
14
15
16
17
18
19
20
21
22
23
24
25
26
27
28
29
30
31
32
33
34
35
36
37
38
39
40
41
42
43
44
45
46
47

Det. No	Parts. No	Description
1	38-1125-5-626	Thread Monitor, C.
2	38-1125-5-578	Thread Tension, C. (2)
3	38-1125-5-577	Thread Tension, C. (1)
4	38-1001-5-414	Thread Tension Plate
5	38-1006-0-248	Cord Clamp(φ5.3-3N)
6	38-1000-4-127	Screw(M4-0.7×6)
7	38-1000-0-665	Washer
8	38-1001-4-979	Insulating Bushing
9	38-1125-6-040	Sensing Plate
10	38-1001-5-418	Spacer
11	38-1000-0-257	Washer
12	38-1000-0-014	Washer
13	38-1000-0-002	Spring Washer
14	38-1000-9-812	Screw(M3-0.5×20)
15	38-1001-5-415	Spring Guide Shsft
16	38-1001-5-424	Spring(Left)
17	38-1001-5-016	Spring Guide Assmbly
18	38-1001-5-416	Spacer
19	38-1001-5-423	Spring(Right)
20	38-1001-5-422	Spring Sleeve
21	38-1000-9-959	Screw(M4-0.7×20)
22	38-1000-9-811	Screw(M2.5-0.45×16)
23	38-1001-5-419	Thread Eyelet
24	38-1000-9-995	Screw(M3-0.5×5)
25	38-1001-5-425	Release Pin
26	38-1000-9-804	Tension Post
27	38-1008-0-232	Tension Disc
28	38-1008-0-705	Spring Washer
29	38-1008-5-276	Tension Spring (Thick)
30	38-1002-0-126	Tension Spring Bushing
31	38-1000-0-182	Adjusting Nut
32	38-1000-0-039	Stop Pin
33	38-1009-3-535	Thread Guide
34	38-1003-7-108	Tension Disc
35	38-1009-3-514	Tension Spring(Thin)
36	38-1000-1-092	Screw(1/8-44×3)
37	38-1001-5-015	Release Spring
38	38-1001-5-014	Release Plate
39	38-1000-8-224	Stud Screw(3.57)
40	38-1001-5-427	Magnet Ring Unit

Det. No	Parts. No	Description
41	38-1000-7-609	Screw(9/64-40×9)
42	38-1000-9-209	Screw(11/64-40×9)
43	38-1120-0-073	Position Detector Unit
44	38-1125-5-434	Spacer
45	38-1000-0-538	Washer
46	38-1000-0-644	Spring Washer
47	38-1012-0-027	Screw(M4-0.7×25)

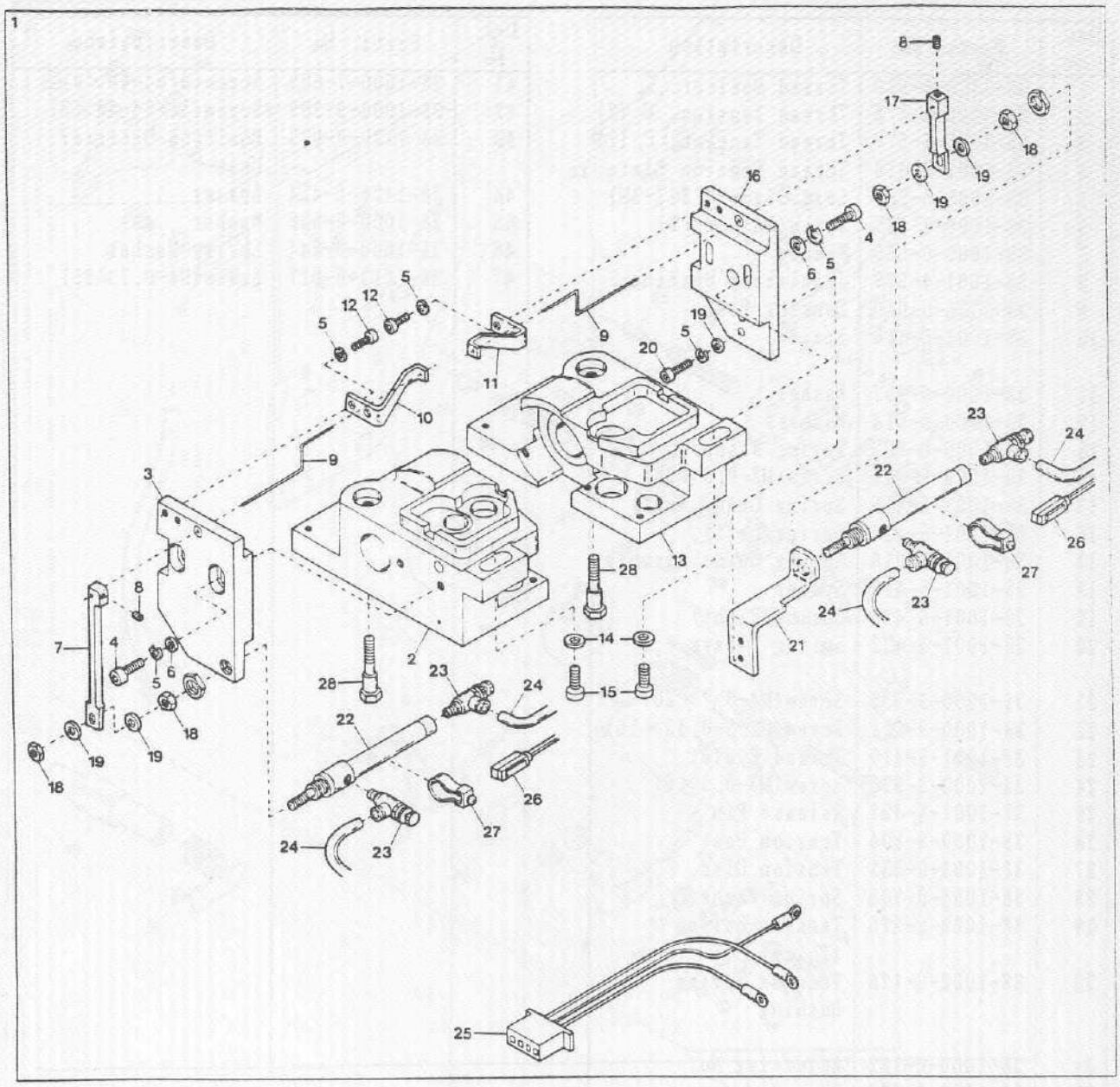
1
8
17
18
19
19
18
16
4
6
5
5
12
12
5
19
5
20
9
11
10
9
3
23
24
22
26
27
13
28
8
7
4
5
6
18
19
19
18
2
28
14
15
21
24
23
23
24
22
26
27
24
23
25

Det. No	Parts. No	Description
1	38-1125-5-627	Bobbin Thread Monitor, Complete
2	38-1125-5-168	Rotary Hook Base (Left)
3	38-1125-5-149	Holder(Left) Unit
4	38-1000-9-749	Screw(M4-0.7×16)
5	38-1000-0-644	Spring Washer
6	38-1000-0-538	Washer
7	38-1125-5-155	Sensing Bar Connection(Left)
8	38-1016-0-001	Screw(M4-0.7×4)
9	38-1125-5-158	Sensing Bar
10	38-1125-5-157	Sensing Bar Guide (Left)
11	38-1125-5-156	Sensing Bar Guide (Right)
12	38-1000-9-746	Screw(M4-0.7×8)
13	38-1125-5-169	Rotary Hook Base (Right)
14	38-1000-0-663	Washer
15	38-1000-6-197	Screw(1/4-24×22)
16	38-1125-5-148	Holder(Right) Unit
17	38-1125-5-323	Sensing Bar Connection(Right)
18	38-1000-0-015	Nut
19	38-1000-0-665	Washer
20	38-1000-9-748	Screw(M4-0.7×12)
21	38-1125-5-153	Cylinder Support (Right)
22	38-1109-1-017	Cylinder(RMS10-ND-20)
23	38-1109-5-001	Speed Control
24 *	38-1001-0-260	Air Tubing(4×2.5mm)
25	38-1120-0-075	Signal Cord
26	38-1106-6-065	Sensing Switch
27	38-1109-8-008	Band
28	38-1000-6-195	Screw(15/64-28×31)

* Specify Length.

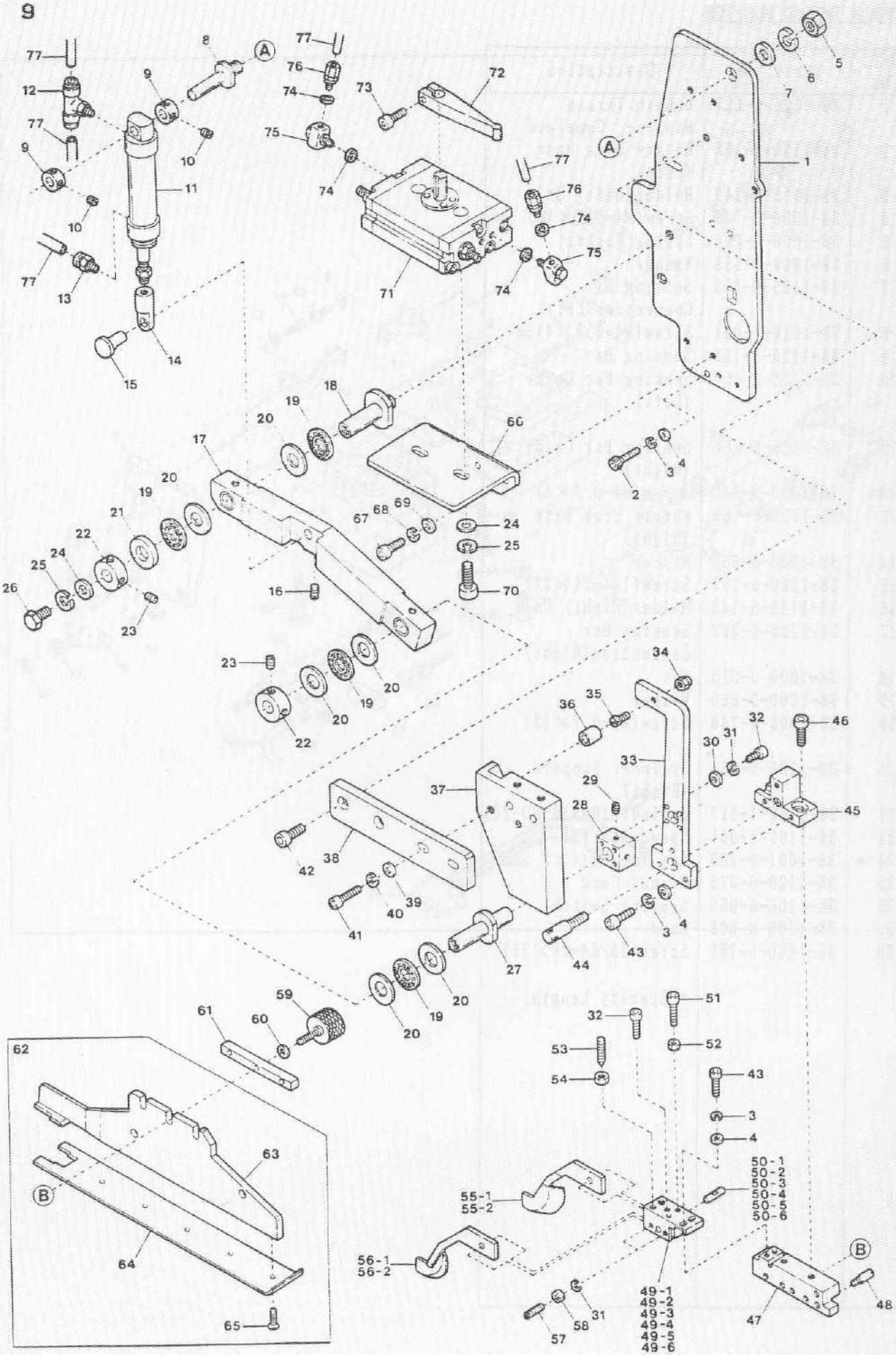
77
12
77
9
8
A
9
10
11
10
77
13
14
15
77
76
74
75
74
73
72
71
77
76
74
75
74
A
1
5
6
7
18
19
20
17
20
19
21
22
24
25
26
23
16
60
67
68
69
24
25
70
2
3
4
23
20
19
20
22
34
35
36
32
46
30
31
33
37
29
28
45
42
38
39
40
41
3
4
43
44
27
20
19
20
59
61
60
62
63
B
64
65
51
32
52
53
54
43
3
4
50-1
50-2
50-3
50-4
50-5
50-6
55-1
55-2
56-1
56-2
49-1
49-2
49-3
49-4
49-5
49-6
31
58
57
B
47
48

PATCH GUIDE MECHANISM

Det. No	Parts. No	Description
1	38-1125-6-410	Head Cover
2	38-1000-9-749	Screw(M4-0.7×16)
3	38-1000-0-644	Spring Washer
4	38-1000-0-665	Washer
5	38-1000-0-260	Nut
6	38-1000-0-439	Spring Washer
7	38-1000-0-612	Washer
8	38-1001-4-523	Cylinder Pin
9	38-1007-7-296	Collar
10	38-1000-7-650	Screw(11/64-40×5)
11	38-1001-0-247	Cylinder(EMD20×30)
12	38-1001-0-056	T-Connector (ET4-PT1/8)
13	38-1001-0-055	Connector(EC4-PT1/8)
14	38-1001-0-285	I-Knuckle(8mm)
15	38-1001-4-533	Connecting Pin
16	38-1000-3-659	Screw(M5-0.8×5)
17	38-1125-6-411	Patch Guide Moving Lever
18	38-1125-5-246	Lever Pin(Rear)
19	38-1001-4-571	Thrust Bearing
20	38-1001-4-572	Thrust Ring
21	38-1125-5-231	Spacer
22	38-1007-7-286	Collar
23	38-1000-3-635	Screw(1/4-40×6)
24	38-1000-0-666	Washer
25	38-1000-0-676	Spring Washer
26	38-1000-9-777	Screw(M8-1.25×14)
27	38-1001-5-484	Lever Pin
28	38-1001-5-485	Adjusting Block
29	38-1000-3-662	Screw(M6-1×6)
30	38-1000-0-014	Washer
31	38-1000-0-002	Spring Washer
32	38-1000-9-745	Screw(M3-0.5×15)
33	38-1001-5-486	Patch Guide Lever
34	38-1000-0-063	Nut
35	38-1000-6-186	Screw(M6-1×10)
36	38-1001-4-186	Cam Roller
37	38-1125-6-461	Patch Guide Cam
38	38-1125-6-462	Patch Guide Cam Arm
39	38-1000-0-663	Washer
40	38-1000-0-667	Spring Washer
41	38-1000-9-977	Screw(M6-1×25)
42	38-1000-9-980	Screw(M6-1×10)
43	38-1000-9-748	Screw(M4-0.7×12)
44	38-1000-6-191	Screw(M8-1.25×12)
45	38-1125-5-745	Patch Guide Holder
46	38-1000-9-970	Screw(M6-1×20)
47	38-1125-5-103	Mount Block
48	38-1018-0-013	Screwed Pin (M5-0.8×20)

Det. No	Parts. No	Description
49-1	38-1001-4-537	Block(10mm)
49-2	38-1001-4-538	〃 (12mm)
49-3	38-1001-5-202	〃 (14mm)
49-4	38-1001-5-293	〃 (16mm)
49-5	38-1001-5-294	〃 (18mm)
49-6	38-1001-5-295	〃 (20mm)
50-1	38-1001-4-521	Shaft(10mm)
50-2	38-1004-4-522	〃 (12mm)
50-3	38-1001-5-200	〃 (14mm)
50-4	38-1001-5-296	〃 (16mm)
50-5	38-1001-5-297	〃 (18mm)
50-6	38-1001-5-298	〃 (20mm)
51	38-1000-9-744	Screw(M3-0.5×10)
52	38-1000-0-012	Nut
53	38-1001-4-535	Spring Plunger
54	38-1000-0-009	Nut
55-1	38-1125-5-855	Jumping Guide(Right) (10mm)
55-2	38-1125-5-723	〃 〃 (12～20mm)
56-1	38-1125-5-856	Jumping Guide(Left) (10mm)
56-2	38-1125-5-724	〃 〃 (12～20mm)
57	38-1015-0-003	Adjusting Screw (M3-0.5×6)
58	38-1000-0-488	Nut
59	38-1125-5-112	Fixing Knob
60	38-1000-0-669	Washer
61	38-1125-5-113	Fixing Plate
62	————————	Patch Guide, C. (See Page 29)
63	————————	Patch Guide(Upper) (See Page 29)
64	————————	Patch Guide(Lower) (See Page 29)
65	38-1000-9-734	Screw(M2-0.4×6)
66	38-1125-6-413	Cylinder Support
67	38-1000-9-751	Screw(M5-0.8×10)
68	38-1000-0-600	Spring Washer
69	38-1000-0-669	Washer
70	38-1000-9-936	Screw(M8-1.25×20)
71	38-1109-1-126	Cylinder (RS01-16D-7°)
72	38-1125-6-415	Needle Bar Stop Lever
73	38-1000-9-752	Screw(M5-0.8×15)
74	38-1000-0-623	Gasket
75	38-1001-0-019	L-Connector
76	38-1001-0-258	Connector(SA-2.5L)
77 *	38-1001-0-260	Air Tubing(4×2.5mm)

* Specify Length.

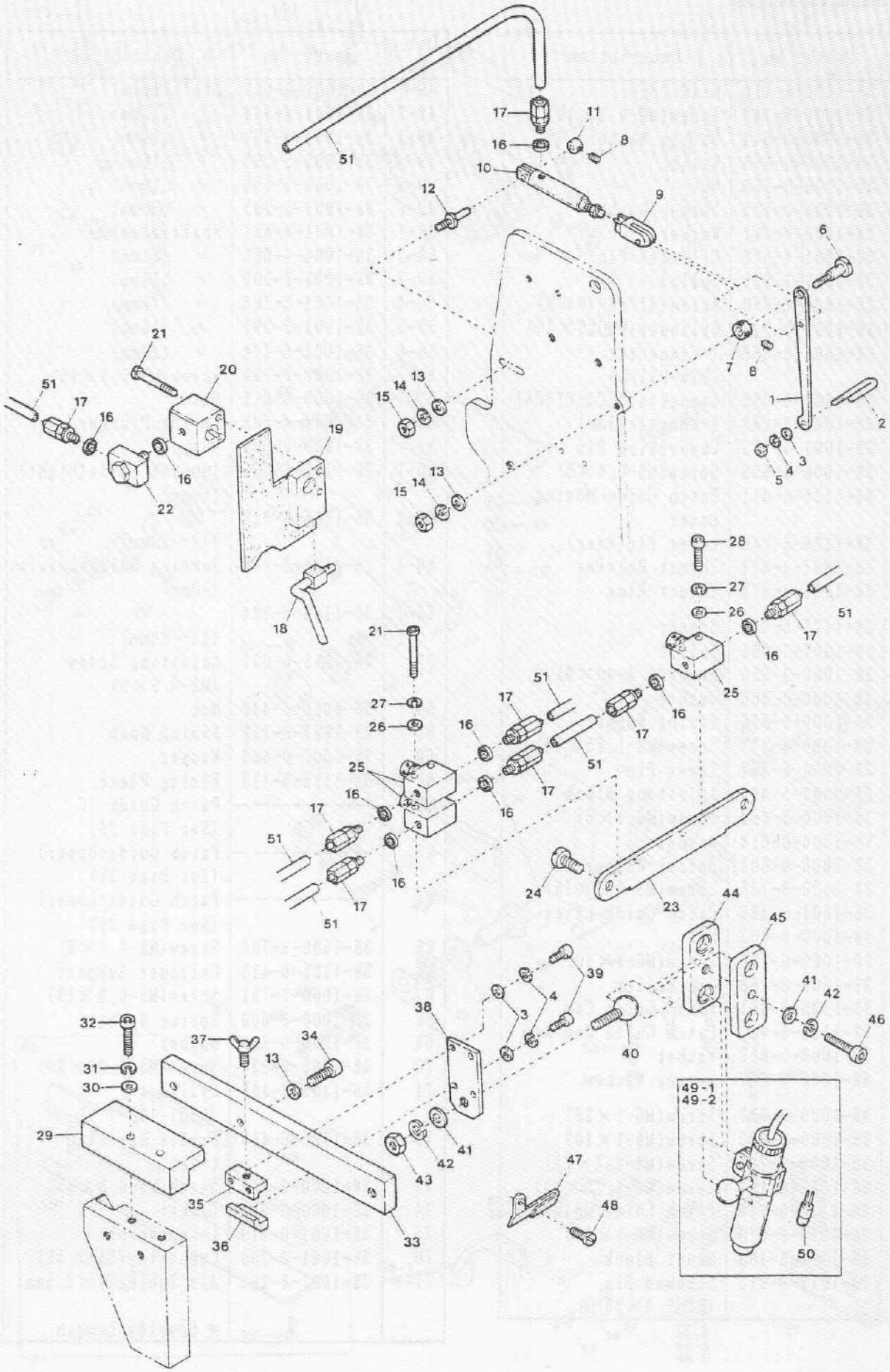
51
17
11
16
8
10
12
9
6
21
20
7
8
51
17
16
14
13
15
1
2
19
16
3
4
5
22
14
13
15
28
27
26
51
17
18
21
16
25
51
27
17
16
26
17
16
51
25
17
16
16
17
51
16
24
23
17
51
44
45
39
41
42
4
3
38
32
37
34
40
46
31
13
30
49-1
49-2
29
42
41
43
47
35
48
36
33
50

Det. No	Parts. No	Description
1	38-1001-4-566	Wiper Lever
2	38-1001-4-525	Wiping Bar
3	38-1000-0-665	Washer
4	38-1000-0-644	Spring Washer
5	38-1000-0-015	Nut
6	38-1000-6-192	Screw(M5-0.8×11)
7	38-1009-4-562	Collar
8	38-1000-3-637	Screw(1/8-44×2.5)
9	38-1001-0-283	Y-Knuckle(3mm)
10	38-1001-0-249	Cylinder(MS10PFS10)
11	38-1008-0-714	Collar
12	38-1001-4-539	Wiper Lever Pin
13	38-1000-0-669	Washer
14	38-1000-0-600	Spring Washer
15	38-1000-0-009	Nut
16	38-1000-0-623	Gasket
17	38-1001-0-258	Connector(SA-2.5L)
18	38-1001-5-443	Oil Return Pipe
19	38-1001-4-971	Cylinder Holder
20	38-1001-0-246	Cylinder(SPS-12×5)
21	38-1000-9-768	Screw(M3-0.5×30)
22	38-1001-0-019	L-Connector
23	38-1001-4-430	Support
24	38-1000-4-642	Screw(1/4-24×12)
25	38-1001-0-054	Speed Control
26	38-1000-0-014	Washer
27	38-1000-0-002	Spring Washer
28	38-1000-9-801	Screw(M3-0.5×20)
29	38-1001-4-529	Block
30	38-1000-0-663	Washer
31	38-1000-0-667	Spring Washer
32	38-1000-9-753	Screw(M6-1×30)
33	38-1001-4-530	Adjusting Plate
34	38-1000-9-752	Screw(M5-0.8×15)
35	38-1001-4-531	Block(Upper)
36	38-1001-4-532	Block(Lower)
37	38-1000-9-911	Screw(M5-0.8×8)
38	38-1001-4-528	Support
39	38-1000-9-747	Screw(M4-0.7×10)
40	38-1000-6-187	Ball Screw (M8-1.25×23)

Det. No	Parts. No	Description
41	38-1000-0-666	Washer
42	38-1000-0-676	Spring Washer
43	38-1000-0-016	Nut
44	38-1001-4-224	Lamp Holder(Left)
45	38-1001-4-225	Lamp Holder(Right)
46	38-1000-9-758	Screw(M8-1.25×30)
47	38-1001-4-260	Needle Thread Eyelet
48	38-1000-5-000	Screw(9/64-40×5.7)
49-1	38-1120-0-063	Work Locating Lamp. C.(H Type)
49-2	38-1120-0-064	〃 〃 C.(- Type)
50	38-1120-0-083	Lamp
51 *	38-1001-0-260	Air Tubing(4×2.5mm)

* Specify Length.

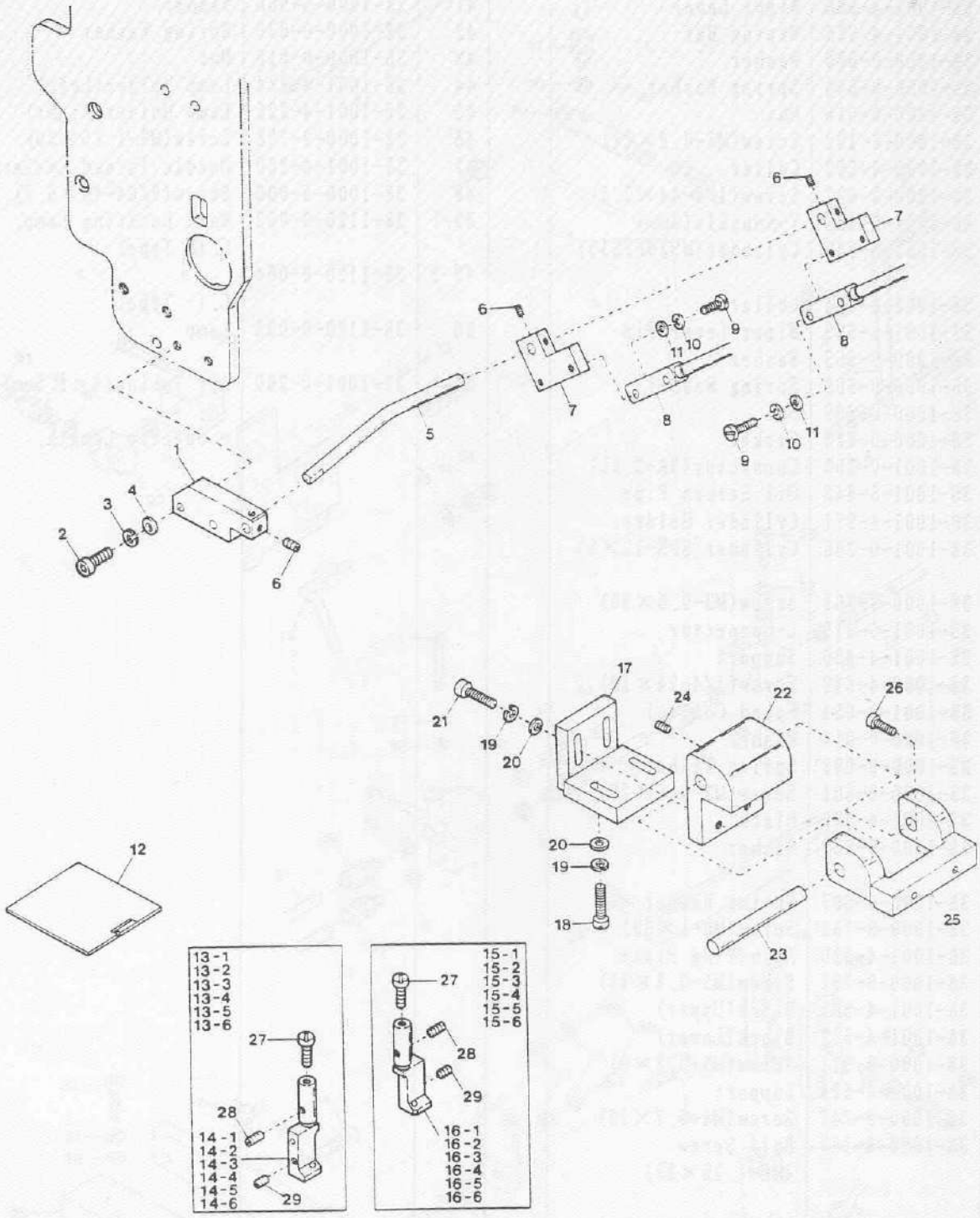
1
2
3
4
5
6
7
8
9
10
11
12
13-1
13-2
13-3
13-4
13-5
13-6
14-1
14-2
14-3
14-4
14-5
14-6
15-1
15-2
15-3
15-4
15-5
15-6
16-1
16-2
16-3
16-4
16-5
16-6
17
18
19
20
21
22
23
24
25
26
27
28
29

Det. No	Parts. No	Description
1	38-1125-6-414	Shaft Holder
2	38-1012-0-001	Screw(M4-0.7×14)
3	38-1000-0-644	Spring Washer
4	38-1000-0-665	Washer
5	38-1125-5-862	Detector Switch Shaft
6	38-1016-0-000	Screw(M3-0.5×3)
7	38-1125-5-838	Switch Holder
8	38-1106-6-026	Detector Switch Unit
9	38-1000-9-745	Screw(M3-0.5×15)
10	38-1000-0-002	Spring Washer
11	38-1000-0-014	Washer
12	38-1001-4-408	Slide Plate
13-1	38-1900-0-130	Needle Head(Left), C.(10mm)
13-2	38-1900-0-132	Needle Head(Left), C.(12mm)
13-3	38-1900-0-134	Needle Head(Left), C.(14mm)
13-4	38-1900-0-136	Needle Head(Left), C.(16mm)
13-5	38-1900-0-138	Needle Head(Left), C.(18mm)
13-6	38-1900-0-140	Needle Head(Left), C.(20mm)
14-1	38-1900-0-154	Needle Head(Left) (10mm)
14-2	38-1900-0-156	Needle Head(Left) (12mm)
14-3	38-1900-0-158	Needle Head(Left) (14mm)
14-4	38-1900-0-160	Needle Head(Left) (16mm)
14-5	38-1900-0-162	Needle Head(Left) (18mm)
14-6	38-1900-0-164	Needle Head(Left) (20mm)
15-1	38-1900-0-131	Needle Head(Right), C.(10mm)
15-2	38-1900-0-133	Needle Head(Right), C.(12mm)
15-3	38-1900-0-135	Needle Head(Right), C.(14mm)
15-4	38-1900-0-137	Needle Head(Right), C.(16mm)
15-5	38-1900-0-139	Needle Head(Right), C.(18mm)
15-6	38-1900-0-141	Needle Head(Right), C.(20mm)

Det. No	Parts. No	Description
16-1	38-1900-0-155	Needle Head(Right) (10mm)
16-2	38-1900-0-157	Needle Head(Right) (12mm)
16-3	38-1900-0-159	Needle Head(Right) (14mm)
16-4	38-1900-0-161	Needle Head(Right) (16mm)
16-5	38-1900-0-163	Needle Head(Right) (18mm)
16-6	38-1900-0-165	Needle Head(Right) (20mm)
17	38-1001-4-425	Hinge(Lower)
18	38-1000-9-977	Screw(M6-1×25)
19	38-1000-0-667	Spring Washer
20	38-1000-0-663	Washer
21	38-1000-9-970	Screw(M6-1×20)
22	38-1001-4-424	Hinge(Middle)
23	38-1001-4-411	Hinge Shaft
24	38-1000-9-736	Screw(M4-0.7×6)
25	38-1001-4-423	Hinge(Upper)
26	38-1000-5-061	Screw(1/4-24×16.7)
27	38-1092-0-029	Adjusting Screw(3.18)
28	38-1092-0-030	Screw(3.18)
29	38-1026-0-004	Screw(1/8-40×2.5)

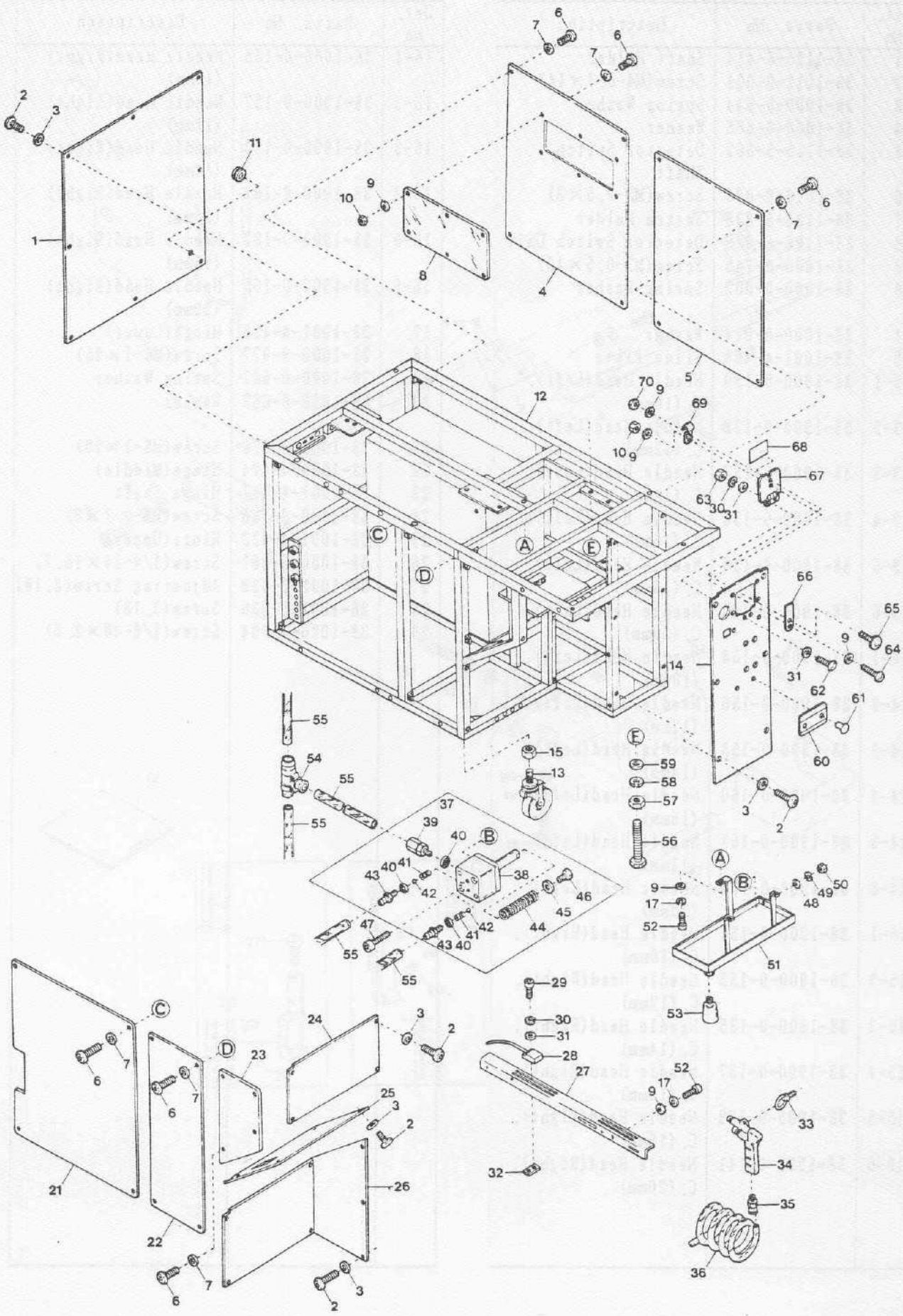
1
2
3
4
5
6
7
8
9
10
11
12
13
14
15
17
21
22
23
24
25
26
27
28
29
30
31
32
33
34
35
36
37
38
39
40
41
42
43
44
45
46
47
48
49
50
51
52
53
54
55
56
57
58
59
60
61
62
63
64
65
66
67
68
69
70
A
B
C
D
E

Det. No	Parts. No	Description
1	38-1001-4-728	Frame Cover(3)
2	38-1000-9-774	Screw(M4-0.7×9.7)
3	38-1000-0-670	Washer
4	38-1125-5-502	Frame Cover(4)
5	38-1125-5-503	Frame Cover(5)
6	38-1000-5-612	Screw(M6-1×12)
7	38-1000-0-663	Washer
8	38-1001-4-584	Sight Window
9	38-1000-0-665	Washer
10	38-1000-0-015	Nut
11	38-1001-0-958	Cord Bushing
12	38-1125-5-852	Frame
13	38-1001-5-224	Caster
14	38-1125-5-938	Control Box Cover (English)
15	38-1000-0-065	Nut
16	.....	.....
17	38-1000-0-644	Spring Washer
18	.....	.....
19	.....	.....
20	.....	.....
21	38-1125-5-500	Frame Cover(2)
22	38-1125-5-499	Frame Cover(1)
23	38-1125-5-078	Frame Cover(9)
24	38-1125-5-523	Frame Cover(6)
25	38-1001-4-924	Frame Cover(7)
26	38-1001-4-925	Frame Cover(8)
27	38-1125-5-445	Sensing Switch Rail
28	38-1106-6-014	Sensing Switch
29	38-1000-9-745	Screw(M3-0.5×15)
30	38-1000-0-002	Spring Washer
31	38-1000-0-014	Washer
32	38-1001-4-780	Nut Plate
33	38-1000-6-226	Eye Bolt(M6-1×14)
34	38-1001-5-475	Air Gun
35	38-1001-0-264	Connector(EC6-PT1/4)
36	38-1001-0-256	Spiral Tube(6×4mm)
37	38-1001-5-220	Oil Return Pump, C.
38	38-1001-0-304	Cylinder(SPD20×10)
39	38-1001-0-258	Connector
40	38-1000-0-623	Gasket

Det. No	Parts. No	Description
41	38-1003-6-104	Spring
42	38-1001-5-221	Steel Ball
43	38-1001-0-018	Connector
44	38-1001-4-977	Pump Cylinder Spring
45	38-1000-0-555	Washer
46	38-1000-9-751	Screw(M5-0.8×10)
47	38-1000-6-229	Screw(M5-0.8×40)
48	38-1000-0-426	Washer
49	38-1000-0-600	Spring Washer
50	38-1000-0-009	Nut
51	38-1001-4-770	Oil Pan
52	38-1000-9-747	Screw(M4-0.7×10)
53	38-1001-4-656	Oil Retainer
54	38-1001-0-271	T-Conntctor
55 *	38-1001-0-260	Air Tubing(4×2.5mm)
56	38-1000-6-232	Bolt(M8-1.25×80)
57	38-1000-0-016	Nut
58	38-1000-0-676	Spring Washer
59	38-1000-0-666	Washer
60	38-1001-8-826	Model Plate(English)
61	38-1003-4-005	Rivet
62	38-1000-9-994	Screw(M3-0.5×8)
63	38-1000-0-012	Nut
64	38-1000-9-992	Screw(M4-0.7×10)
65	38-1000-6-434	Screw(9/64-40×7.9)
66	38-1125-5-942	Front Cover Stop
67	38-1125-5-941	Front Cover
68	38-1039-0-127	Sticker(English)
69	38-1125-3-220	Stop Spring
70	38-1000-0-335	Nut

* Specify Length.

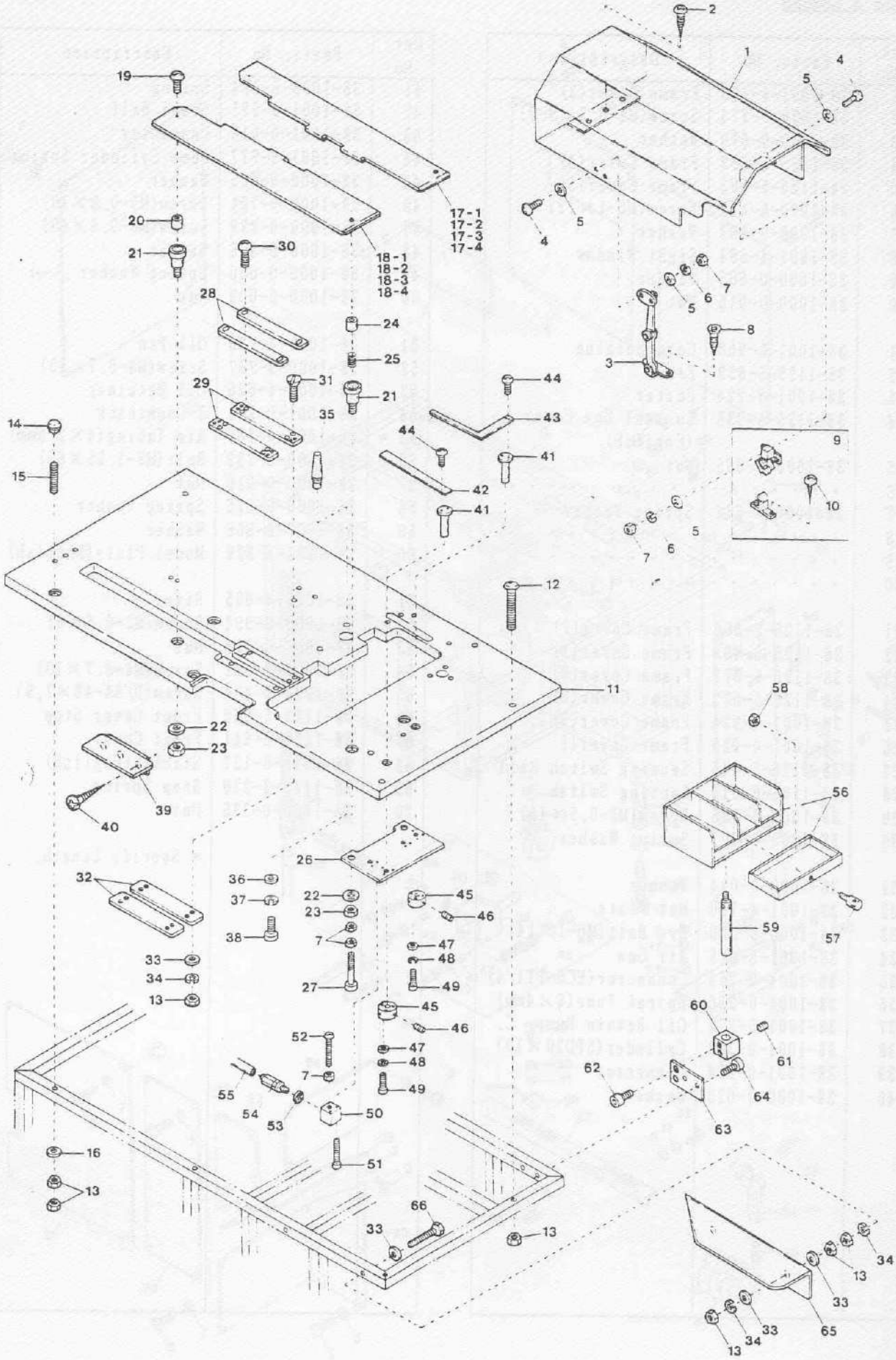
2
1
4
5
19
17-1
17-2
17-3
17-4
20
21
30
18-1
18-2
18-3
18-4
28
24
25
31
21
35
29
44
43
44
41
42
41
14
15
9
10
7
6
5
12
11
58
22
23
39
40
56
26
32
36
37
22
23
45
46
38
7
47
48
33
34
13
27
49
59
57
45
46
60
52
47
48
61
62
7
55
54
53
50
64
63
16
13
51
66
33
13
34
13
33
33
34
13
65

Det. No	Parts. No	Description
1	38-1001-4-512	Mechanism Cover
2	38-1000-6-905	Wood Screw(φ5.1×20)
3	38-1001-4-655	Cover Stay
4	38-1000-9-994	Screw(M3-0.5×8)
5	38-1000-0-014	Washer
6	38-1000-0-002	Spring Washer
7	38-1000-0-012	Nut
8	38-1000-9-814	Wood Screw(φ3.1×20)
9	38-1001-4-720	Cover Latch
10	38-1000-6-203	Wood Screw(φ2.4×16)
11	38-1960-1-011	Table Top
12	38-1000-6-196	Bolt(M8-1.25×57)
13	38-1000-0-016	Nut
14	38-1000-0-070	Hanging Nut
15	38-1000-9-858	Hanging Bolt (M8-1.25×75)
16	38-1000-0-429	Washer
17-1	38-1125-5-931	Slide Plate(Right) (10,12,14mm)
17-2	38-1125-5-933	〃 〃 (16mm)
17-3	38-1125-5-935	〃 〃 (18mm)
17-4	38-1125-5-937	〃 〃 (20mm)
18-1	38-1125-5-930	Slide Plate(Left) (10,12,14mm)
18-2	38-1125-5-932	〃 〃 (16mm)
18-3	38-1125-5-934	〃 〃 (18mm)
18-4	38-1125-5-936	〃 〃 (20mm)
19	38-1000-9-770	Screw(M4-0.7×8)
20	38-1001-4-032	Holding Pin
21	38-1001-5-222	Slide Plate Holder
22	38-1000-0-433	Washer
23	38-1000-0-421	Nut
24	38-1001-5-223	Stop Pin
25	38-1001-4-056	Spring
26	38-1125-6-324	Cylinder Holder
27	38-1000-6-223	Screw(M3-0.5×55)
28	38-1125-5-505	Plate
29	38-1125-5-506	Plate Support
30	38-1000-9-954	Screw(M6-1×8)

Det. No	Parts. No	Description
31	38-1000-9-807	Screw(M8-1.25×40)
32	38-1125-5-507	Nut Plate
33	38-1000-0-666	Washer
34	38-1000-0-676	Spring Washer
35	38-1125-5-565	Machine Stay
36	38-1000-0-605	Washer
37	38-1000-0-667	Spring Washer
38	38-1000-9-970	Screw(M6-1×20)
39	38-1001-4-659	Plate
40	38-1000-6-209	Wood Screw (φ3.5×21.5)
41	38-1125-6-325	Stay Holder(Upper)
42	38-1125-6-327	〃 (Left)
43	38-1125-6-328	〃 (Right)
44	38-1000-6-227	Screw(M4-0.7×5)
45	38-1125-6-326	Stay Holder(Lower)
46	38-1000-9-736	Screw(M4-0.7×6)
47	38-1000-0-665	Washer
48	38-1000-0-644	Spring Washer
49	38-1000-9-750	Screw(M4-0.7×20)
50	38-1001-0-248	Cylinder(SPS-12×5)
51	38-1000-9-801	Screw(M3-0.5×20)
52	38-1000-9-793	Screw(M3-0.5×35)
53	38-1000-0-623	Gasket
54	38-1001-0-258	Connector(SA-2.5L)
55 *	38-1001-0-260	Air Tubing(4×2.5mm)
56	38-1001-4-680	Tray
57	38-1000-6-444	Knob
58	38-1000-0-332	Nut
59	38-1001-4-302	Mount Shaft
60	38-1001-4-300	Shaft Holder
61	38-1000-9-740	Screw(M6-1×10)
62	38-1000-9-747	Screw(M4-0.7×10)
63	38-1001-4-301	Support
64	38-1000-9-755	Screw(M6-1×45)
65	38-1125-6-277	Extension Plate
66	38-1000-6-232	Bolt(M8-1.25×80)

* Specify Length.

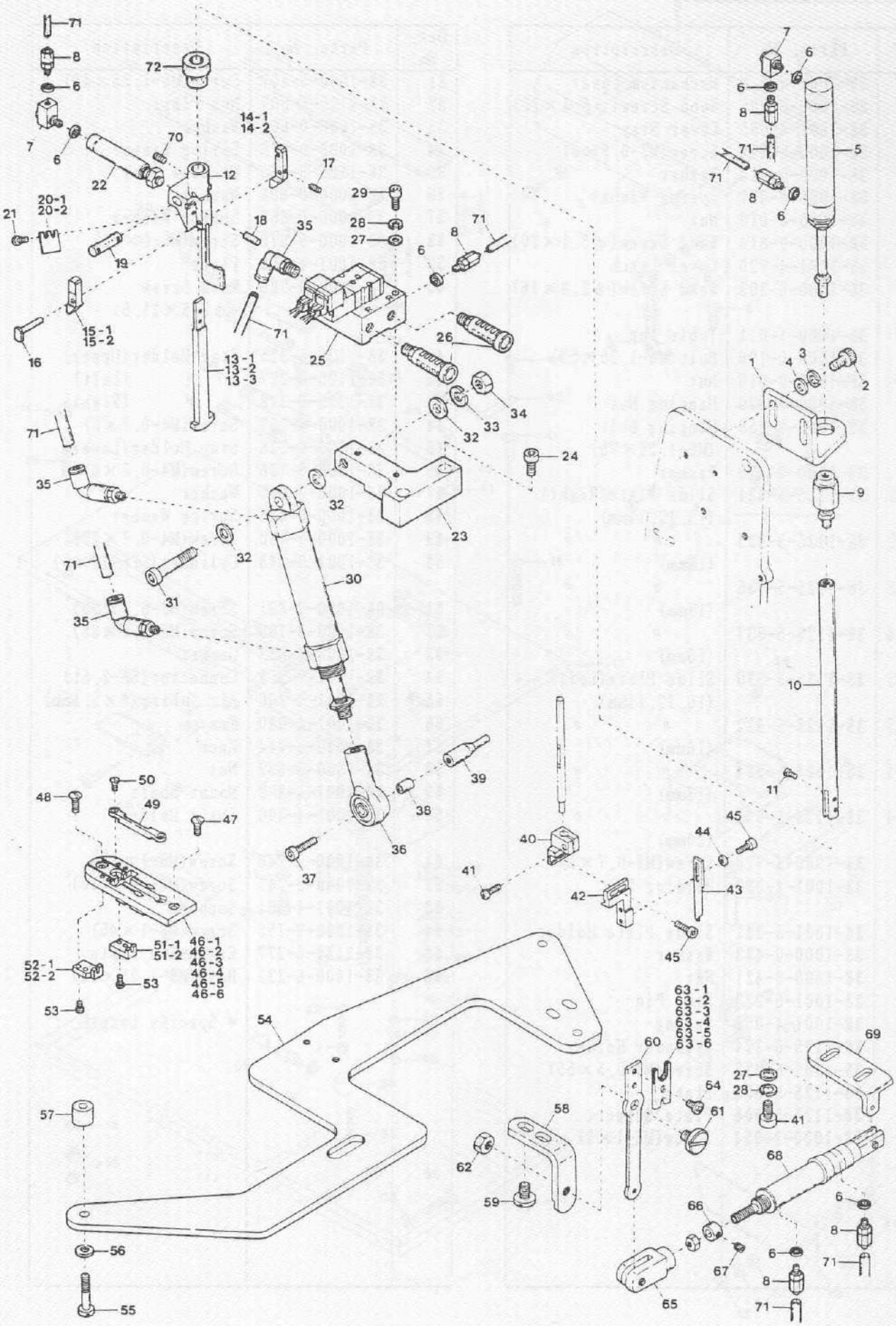
71
8
6
72
7
6
22
70
12
14-1
14-2
17
29
28
27
21
20-1
20-2
18
35
8
71
19
6
15-1
15-2
16
71
25
26
13-1
13-2
13-3
34
33
32
24
71
35
32
23
32
71
31
30
35
39
38
36
37
48
50
49
47
40
41
42
44
45
43
45
51-1
51-2
46-1
46-2
46-3
46-4
46-5
46-6
52-1
52-2
53
53
54
57
56
55
63-1
63-2
63-3
63-4
63-5
63-6
60
64
61
58
62
59
27
28
41
69
68
66
67
65
6
8
6
8
71
71
7
6
6
8
71
5
1
4
3
2
9
10
11

Det. No.	Parts. No.	Description
1	38-1001-4-481	Cylinder Support
2	38-1000-9-752	Screw(M5-0.8×10)
3	38-1000-0-600	Spring Washer
4	38-1000-0-669	Washer
5	38-1001-0-241	Cylinder(MS16ND-40P)
6	38-1000-0-623	Gasket
7	38-1001-0-019	L-Connector
8	38-1001-0-258	Connector(SA-2.5L)
9	38-1001-4-840	Universal Joint
10	38-1001-4-482	Shaft
11	38-1000-6-178	Screw(1/8-44×4.8)
12	38-1125-5-718	Nount Block
13-1	38-1001-4-483	Pick-up(10,12,14m)
13-2	38-1001-5-302	〃 (16,18mm)
13-3	38-1125-5-696	〃 (20mm)
14-1	38-1125-5-430	Thread Holder(Right) (10,12,14mm)
14-2	38-1125-5-600	〃 〃 (16,18,20mm)
15-1	38-1125-5-431	Thread Holder(Left) (10,12,14mm)
15-2	38-1125-5-601	〃 〃 (16,18,20mm)
16	38-1125-5-432	Pin
17	38-1016-0-000	Screw(M3-0.5×3)
18	38-1001-4-577	Press Pin
19	38-1001-4-573	Thread Holder Pin
20-1	38-1001-4-244	Blade(10,12,14mm)
20-2	38-1001-5-292	〃 (16,18,20mm)
21	38-1000-1-222	Screw(1/8-44×4.8)
22	38-1109-1-060	Cylinder(MS6-NFS-5)
23	38-1125-5-715	Cylinder Support
24	38-1000-9-976	Screw(M6-1×15)
25	38-1109-0-143	Solenoid Valve Unit
26	38-1001-0-143	Silencer(MF-6 PT1/8)
27	38-1000-0-665	Washer
28	38-1000-0-644	Spring Washer
29	38-1000-9-750	Screw(M4-0.7×20)
30	38-1109-1-038	Cylinder(M20-PD10)
31	38-1000-6-220	Screw(M8-1.25×40)
32	38-1000-0-666	Washer
33	38-1000-0-676	Spring Washer
34	38-1000-0-016	Nut
35	38-1001-0-057	Elbow Connector (EL4-PT1/8)
36	38-1001-4-402	Rod End
37	38-1000-9-970	Screw(M6-1×20)
38	38-1125-5-717	Spacer
39	38-1125-5-716	Moving Lever
40	38-1125-6-425	Adjusting Block

Det. No.	Parts. No.	Description
41	38-1000-9-746	Screw(M4-0.7×8)
42	38-1125-5-722	Center Knife Holder
43	38-1125-5-721	Center Knife
44	38-1000-0-014	Washer
45	38-1011-0-002	Screw(M3-0.5×5)
46-1	38-1001-4-426	Throat Plate(10mm)
46-2	38-1001-4-427	〃 (12mm)
46-3	38-1001-4-489	〃 (14mm)
46-4	38-1001-5-254	〃 (16mm)
46-5	38-1001-5-255	〃 (18mm)
46-6	38-1001-5-256	〃 (20mm)
47	38-1000-9-127	Screw(11/64-40×8)
48	38-1000-9-142	Screw(9/64-40×4.8)
49	38-1125-5-594	Lower Knife
50	38-1000-1-613	Screw(3/32-56×3.1)
51-1	38-1001-4-505	Fixed Knife(Right) (10,14,16,18,20mm)
51-2	38-1001-4-507	〃 〃 (12mm)
52-1	38-1001-4-506	Fixed Knife(Left) (10,14,16,18,20mm)
52-2	38-1001-4-508	〃 〃 (12mm)
53	38-1000-4-404	Screw(3/32-56×5.1)
54	38-1125-5-433	Cylinder Support
55	38-1000-5-121	Screw(11/64-40×28)
56	38-1000-0-538	Washer
57	38-1125-5-434	Spacer
58	38-1001-4-501	Supporting Plate
59	38-1000-7-678	Screw(1/4-40×8)
60	38-1125-5-166	Knife Holder
61	38-1000-6-198	Screw(1/4-40×7.5)
62	38-1000-0-419	Nut
63-1	38-1001-4-503	Movable Knife(10mm)
63-2	38-1001-4-504	〃 (12mm)
63-3	38-1001-5-201	〃 (14mm)
63-4	38-1001-5-299	〃 (16mm)
63-5	38-1001-5-300	〃 (18mm)
63-6	38-1001-5-301	〃 (20mm)
64	38-1000-4-358	Screwe(9/64-40×5.6)
65	38-1001-0-283	Y-Knuckle(3mm)
66	38-1001-4-502	Collar
67	38-1016-0-001	Screw(M4-0.7×4)
68	38-1001-0-242	Cylinder(MS10-PD10)
69	38-1001-4-510	Cylinder Support
70	38-1000-9-200	Screw(15/64-28×9.5)
71 *	38-1001-0-260	Air Tubing(4×2.5mm)
72	38-1001-4-579	Shaft Cover(Rubber)
		* Specify Length.

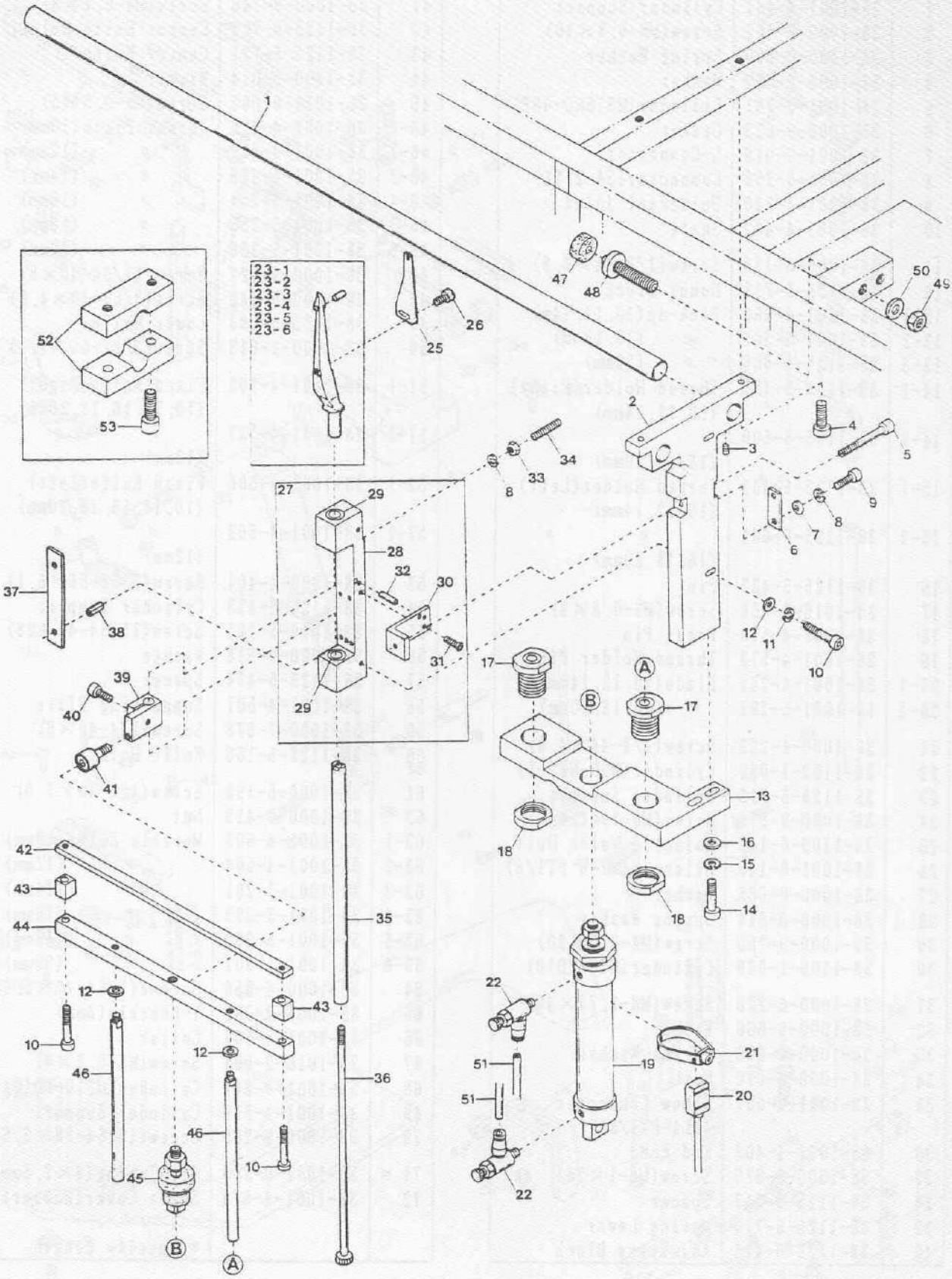
1
2
3
4
5
6
7
8
9
10
11
12
13
14
15
16
17
18
19
20
21
22
23-1
23-2
23-3
23-4
23-5
23-6
25
26
27
28
29
30
31
32
33
34
35
36
37
38
39
40
41
42
43
44
45
46
47
48
49
50
51
52
53
A
B

Det. No	Parts. No	Description
1	38-1125-5-421	Slide Shaft
2	38-1125-5-420	Shaft Holder(Front)
3	38-1000-9-740	Screw(M6-1×10)
4	38-1000-9-936	Screw(M8-1.25×20)
5	38-1000-6-176	Screw(M6-1×50)
6	38-1001-4-129	Plate
7	38-1000-0-665	Washer
8	38-1000-0-644	Spring Washer
9	38-1000-9-747	Screw(M4-0.7×10)
10	38-1000-9-754	Screw(M6-1×35)
11	38-1000-0-667	Spring Washer
12	38-1000-0-663	Washer
13	38-1001-4-711	Cylinder Holder
14	38-1000-9-940	Screw(M8-1.25×35)
15	38-1000-0-676	Spring Washer
16	38-1000-0-666	Washer
17	38-1001-4-899	Guide Bushing
18	38-1001-4-709	Nut
19	38-1109-1-020	Cylinder(REMD25×75)
20	38-1106-6-012	Sensing Switch
21	38-1001-0-300	Band
22	38-1001-0-254	Speed Control
23-1	38-1125-6-426	Tab Finger(10mm)
23-2	38-1125-6-427	〃 (12mm)
23-3	38-1125-6-428	〃 (14mm)
23-4	38-1125-6-429	〃 (16mm)
23-5	38-1125-6-430	〃 (18mm)
23-6	38-1125-6-431	〃 (20mm)
24	.....	.....
25	38-1125-6-443	Tab Knife
26	38-1000-9-797	Screw (11/128-56×3.2)
27	38-1001-5-237	Tab Finger Holder (Front), C.
28	38-1001-5-246	Tab Finger Holder
29	38-1001-4-707	Bearing
30	38-1001-4-130	Adjusting Piece
31	38-1000-9-781	Screw(M3-0.5×10)
32	38-1000-0-032	Knock Pin
33	38-1000-0-015	Nut
34	38-1000-9-737	Screw(M4-0.7×20)
35	38-1001-5-240	Tab Knife Shaft
36	38-1001-5-243	Lock Screw
37	38-1001-5-242	Spacer
38	38-1000-0-035	Spring Pin
39	38-1001-4-705	Shaft Holder(Front)
40	38-1000-9-752	Screw(M5-0.8×15)

Det. No	Parts. No	Description
41	38-1001-4-144	Bearing
42	38-1125-5-403	Lifting Guide(Upper)
43	38-1001-4-817	Lifting Guide Spacer
44	38-1125-5-404	Lifting Guide(Lower)
45	38-1001-4-842	Universal Joint
46	38-1001-5-257	Guide Shaft
47	38-1001-4-143	Rubber Cushion
48	38-1019-0-026	Bolt(M10-1.5×8.7)
49	38-1000-0-260	Nut
50	38-1000-0-612	Washer
51 *	38-1001-0-260	Air Tubing(4×2.5mm)
52	38-1001-4-613	Shipping Lock
53	38-1000-9-753	Screw(M6-1×30)

* Specify Length.

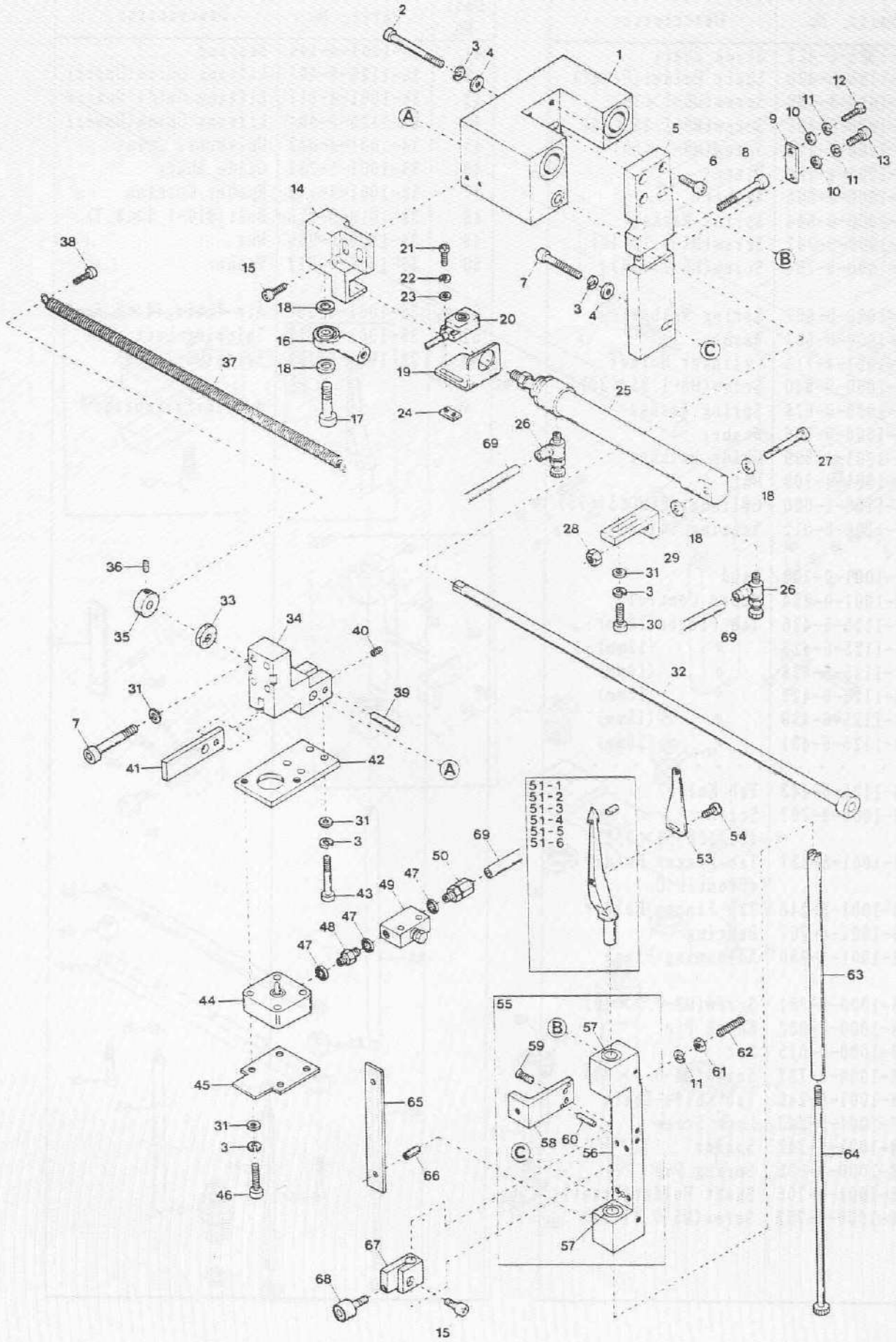
1
2
3
4
5
6
7
8
9
10
11
12
13
14
15
16
17
18
19
20
21
22
23
24
25
26
27
28
29
30
31
32
33
34
35
36
37
38
39
40
41
42
43
44
45
46
47
48
49
50
51-1
51-2
51-3
51-4
51-5
51-6
53
54
55
56
57
58
59
60
61
62
63
64
65
66
67
68
69
A
B
C

Det. No.	Parts. No.	Description
1	38-1125-5-386	Slide Unit
2	38-1000-6-225	Screw(M6-1×65)
3	38-1000-0-667	Spring Washer
4	38-1000-0-428	Washer
5	38-1125-5-388	Block
6	38-1000-9-970	Screw(M6-1×20)
7	38-1000-9-753	Screw(M6-1×30)
8	38-1000-6-176	Screw(M6-1×50)
9	38-1001-4-129	Plate
10	38-1000-0-665	Washer
11	38-1000-0-644	Spring Washer
12	38-1000-9-992	Screw(M4-0.7×10)
13	38-1000-9-974	Screw(M4-0.7×8)
14	38-1125-5-853	Block
15	38-1000-9-752	Screw(M5-0.8×10)
16	38-1001-4-402	Rod End
17	38-1000-9-972	Screw(M8-1.25×25)
18	38-1000-0-666	Washer
19	38-1125-5-579	Switch Support
20	38-1106-6-014	Sensing Switch
21	38-1000-9-745	Screw(M3-0.5×15)
22	38-1000-0-002	Spring Washer
23	38-1000-0-014	Washer
24	38-1001-4-780	Nut Plate
25	38-1109-1-041	Cylinder (EMD-CA20-200-T1100)
26	38-1001-0-254	Speed Control
27	38-1000-9-940	Screw(M8-1.25×35)
28	38-1000-0-016	Nut
29	38-1125-5-443	Cylinder Support
30	38-1000-9-977	Screw(M6-1×25)
31	38-1000-0-663	Washer
32	38-1125-5-409	Shaft
33	38-1001-4-120	Rubber Cushion
34	38-1125-5-849	Cylinder Holder
35	38-1001-4-119	Collar
36	38-1000-3-662	Screw(M6-1×6)
37	38-1001-4-108	Clamp Foot Shaft Spring
38	38-1000-9-980	Screw(M6-1×10)
39	38-1001-4-117	Holder Shaft
40	38-1000-9-736	Screw(M4-0.7×6)

Det. No.	Parts. No.	Description
41	38-1125-5-850	Clamp Plate
42	38-1001-4-693	Clamp Cylinder Support
43	38-1000-9-976	Screw(M6-1×45)
44	38-1001-0-244	Cylinder(SPS32-5)
45	38-1125-5-851	Metal Sensing Switch Pereceive Plate
46	38-1000-9-964	Screw(M6-1×40)
47	38-1000-0-623	Gasket
48	38-1001-0-032	Nipple(M5)
49	38-1001-0-054	Speed Control
50	38-1001-0-258	Connector
51-1	38-1125-6-426	Tab Finger(10mm)
51-2	38-1125-6-427	〃 (12mm)
51-3	38-1125-6-428	〃 (14mm)
51-4	38-1125-6-429	〃 (16mm)
51-5	38-1125-6-430	〃 (18mm)
51-6	38-1125-6-431	〃 (20mm)
52	.....	.....
53	38-1125-6-443	Tab Knife
54	38-1000-9-797	Screw (11/128-56×3.2)
55	38-1001-5-238	Tab Finger Holder (Rear), C.
56	38-1001-5-246	Tab Finger Holder
57	38-1001-4-707	Bearing Finger
58	38-1001-4-130	Adjusting Piece
59	38-1000-9-781	Screw(M3-0.5×10)
60	38-1000-0-032	Knock Pin
61	38-1000-0-015	Nut
62	38-1000-9-737	Adjusting Screw (M4-0.7×20)
63	38-1001-5-240	Tab Knife Shaft
64	38-1001-5-243	Lock Screw
65	38-1001-5-242	Spacer
66	38-1000-0-035	Spring Pin
67	38-1001-4-704	Shaft Holder(Rear)
68	38-1001-4-144	Bearing
69 *	38-1001-0-260	Air Tubing(4×2.5mm)

* Specify Length.

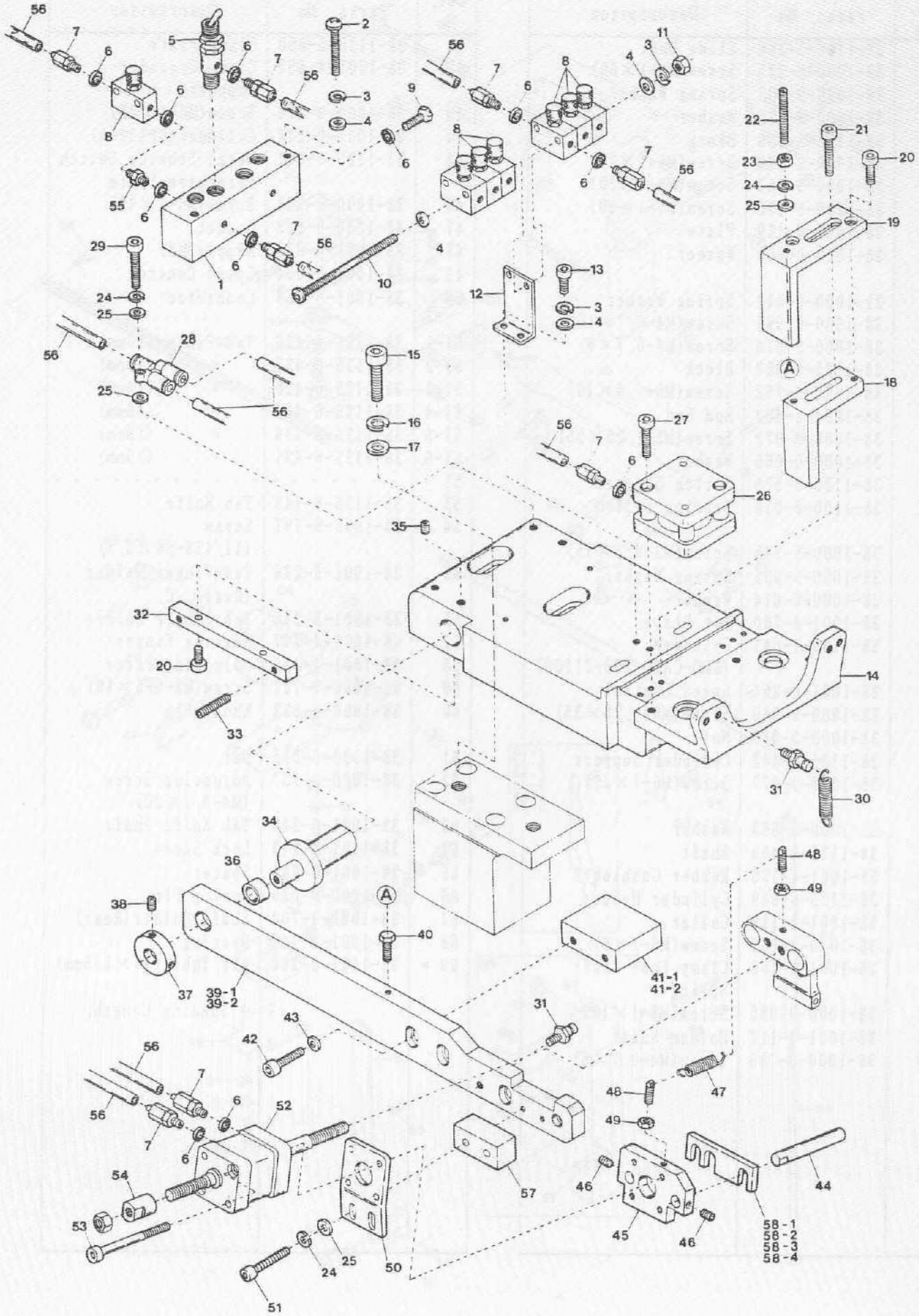
56
7
6
5
2
11
3
4
8
9
22
21
20
23
24
25
19
18
A
1
10
12
13
15
16
17
26
27
28
29
35
32
33
14
31
30
34
36
38
37
39-1
39-2
40
41-1
41-2
48
49
42
43
47
52
54
53
51
50
57
46
45
44
58-1
58-2
58-3
58-4
55

Det. No	Parts. No	Description
1	38-1001-4-625	Manifold
2	38-1000-6-214	Screw(M3-0.5×40)
3	38-1000-0-002	Spring Washer
4	38-1000-0-014	Washer
5	38-1001-0-182	TAC Valve
6	38-1000-0-623	Gasket
7	38-1001-0-258	Connector(SA-2.5L)
8	38-1001-0-054	Speed Control
9	38-1011-0-067	Plug Screw(M5-0.8×5)
10	38-1000-6-248	Bolt(M3-0.5×80)
11	38-1000-0-012	Nut
12	38-1001-4-606	Support
13	38-1000-9-744	Screw(M3-0.5×10)
14	38-1125-5-737	Carriage Block
15	38-1000-9-761	Screw(M10-1.5×55)
16	38-1000-0-439	Spring Washer
17	38-1000-0-612	Washer
18	38-1001-4-599	Positioner(Lower)
19	38-1001-4-598	Positioner(Upper)
20	38-1000-9-747	Screw(M4-0.7×10)
21	38-1000-9-750	Screw(M4-0.7×20)
22	38-1000-6-213	Screw(M4-0.7×30)
23	38-1000-0-015	Nut
24	38-1000-0-644	Spring Washer
25	38-1000-0-665	Washer
26	38-1001-0-250	Cylinder(SPD-32×20)
27	38-1000-9-755	Screw(M6-1×45)
28	38-1001-0-337	Union Y-Connector (KQU04-00)
29	38-1000-9-749	Screw(M4-0.7×16)
30	38-1001-4-030	Clamp Foot Spring
31	38-1000-6-183	Screw(M6-1×6.5)
32	38-1125-5-354	Adjustment Block
33	38-1000-9-738	Screw(M5-0.8×30)
34	38-1001-5-244	Clamp Foot Shaft
35	38-1000-3-662	Screw(M6-1×6)
36	38-1001-4-654	Bushing
37	38-1001-4-592	Collar
38	38-1000-3-655	Screw(M4-0.7×10)
39-1	38-1125-5-342	Clamp Arm(Right)
39-2	38-1125-5-343	〃 (Left)
40	38-1000-6-215	Screw(M4-0.7×10)

Det. No	Parts. No	Description
41-1	38-1125-5-344	Support(10,12,14mm)
41-2	38-1125-6-448	〃 (16,18,20mm)
42	38-1000-9-976	Screw(M6-1×15)
43	38-1000-0-399	Washer
44	38-1125-6-549	Brush Blade Guide Shaft(Short)
45	38-1125-5-739	Cylinder Support
46	38-1000-6-212	Screw(M5-0.8×6)
47	38-1001-4-653	Return Spring
48	38-1000-6-638	Screw(5/32-40×9.5)
49	38-1000-0-339	Nut
50	38-1125-6-222	Cylinder Bracket
51	38-1000-6-219	Screw(M4-0.7×30)
52	38-1109-1-127	Cylinder (SPDW-20×26-E)
53	38-1012-0-038	Screw(M5-0.8×55)
54	38-1125-6-456	Adjusting Sleeve
55	38-1001-0-032	Nipple(M5)
56 *	38-1001-0-260	Air Tubing(4×2.5mm)
57	38-1125-6-457	Spacer
58-1	38-1125-6-396	Spacer(3.2mm) (for 10mm)
58-2	38-1125-6-453	〃 (6.0mm) (for 12,14mm)
58-3	38-1125-6-455	〃 (8.0mm) (for 16,18mm)
58-4	38-1125-6-469	〃 (10.0mm) (for 20mm)

* Specify Length.

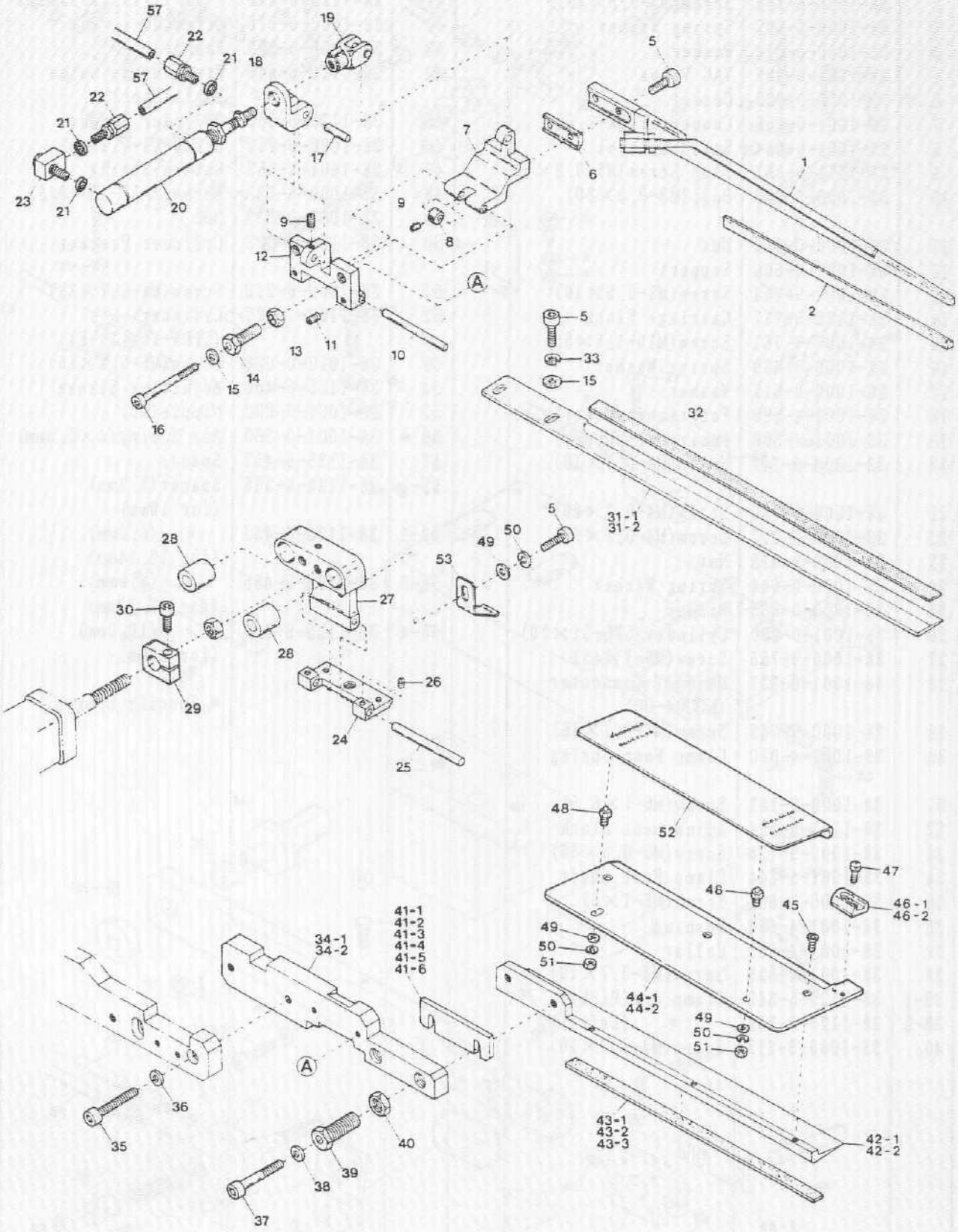
57
22
21
18
19
57
22
21
23
21
20
17
5
7
6
1
9
8
12
A
2
5
33
15
13
11
10
14
15
16
32
31-1
31-2
5
50
49
53
28
27
30
28
29
26
24
25
48
52
47
48
45
46-1
46-2
41-1
41-2
41-3
41-4
41-5
41-6
34-1
34-2
49
50
51
44-1
44-2
49
50
51
A
36
35
40
39
38
37
43-1
43-2
43-3
42-1
42-2

Det. No	Parts. No	Description
1	38-1125-5-732	Flap Clamp(Left)
2	38-1001-4-590	Flap Clamp Rubber
3	.....	.....
4	.....	.....
5	38-1000-9-746	Screw(M4-0.7×8)
6	38-1001-5-472	Flap Clamp Spacer
7	38-1001-4-614	Flap Holder
8	38-1001-4-610	Flap Holder Collar
9	38-1016-0-000	Screw(M3-0.5×3)
10	38-1001-4-611	Flap Holdr Shaft
11	38-1000-9-736	Screw(M4-0.7×6)
12	38-1001-4-608	Flap Holder Bracket
13	38-1000-0-145	Nut
14	38-1000-6-193	Screw(M8-1.25×19)
15	38-1000-0-665	Washer
16	38-1000-6-235	Screw(M4-0.7×35)
17	38-1001-4-609	Bracket Shaft
18	38-1001-4-587	Cylinder Bracket
19	38-1001-0-284	Y-Knuckle
20	38-1109-1-046	Cylinder(MS-16ND-35P)
21	38-1000-0-623	Gasket
22	38-1001-0-258	Connector(SA-2.5L)
23	38-1001-0-019	Universal Elbow (M-5UL)
24	38-1125-5-330	Brush Blade Holder
25	38-1125-5-331	Holder Shaft
26	38-1016-0-001	Screw(M4-0.7×4)
27	38-1125-5-740	Fixing Block
28	38-1125-5-348	Bearing
29	38-1125-5-897	Collar
30	38-1012-0-026	Screw(M5-0.8×18)
31-1	38-1125-5-729	Brush Blade(Right)
31-2	38-1125-5-730	〃 (Left)
32	38-1125-6-230	Reflective Sheet
33	38-1000-0-644	Spring Washer
34-1	38-1001-4-645	Connecting Arm(Right)
34-2	38-1001-4-646	〃 (Left)
35	38-1000-9-976	Screw(M6-1×15)
36	38-1000-0-399	Washer
37	38-1000-9-964	Screw(M6-1×40)
38	38-1000-0-663	Washer
39	38-1019-0-042	Screw(M12-1×23)
40	38-1000-6-185	Nut

Det. No	Parts. No	Description
41-1	38-1125-5-576	Spacer(1.0mm)(Note)
41-2	38-1001-4-593	〃 (3.0mm) 〃
41-3	38-1001-4-594	〃 (3.25mm) 〃
41-4	38-1001-5-411	〃 (3.5mm) 〃
41-5	38-1001-5-219	〃 (4.0mm) 〃
41-6	38-1001-4-595	〃 (4.5mm) 〃
42-1	38-1125-5-743	Clamp Foot(Right)
42-2	38-1125-5-744	〃 (Left)
43-1	38-1001-4-589	Clamp Foot Rubber (3.5mm)
43-2	38-1125-5-960	〃 (6.0mm)(Extra)
43-3	38-1125-5-961	〃 (2.0mm)(Extra)
44-1	38-1125-6-449	Cover Plate(Left)
44-2	38-1125-6-450	〃 (Right)
45	38-1000-6-217	Screw(M3-0.5×5)
46-1	38-1125-5-296	Stop Guide(Left)
46-2	38-1125-5-297	〃 (Right)
47	38-1011-0-030	Screw(M3-0.5×2.6)
48	38-1125-6-316	Flap Gauge Pin
49	38-1000-0-665	Washer
50	38-1000-0-644	Spring Washer
51	38-1000-0-015	Nut
52	38-1125-6-315	Flap Gauge
53	38-1125-5-741	Press Spring
54	.....	.....
55	.....	.....
56	.....	.....
57 *	38-1001-0-260	Air Tubing(4×2.5mm)

* Specify Length.

Note: For details of Spacer, refer to Page 29.

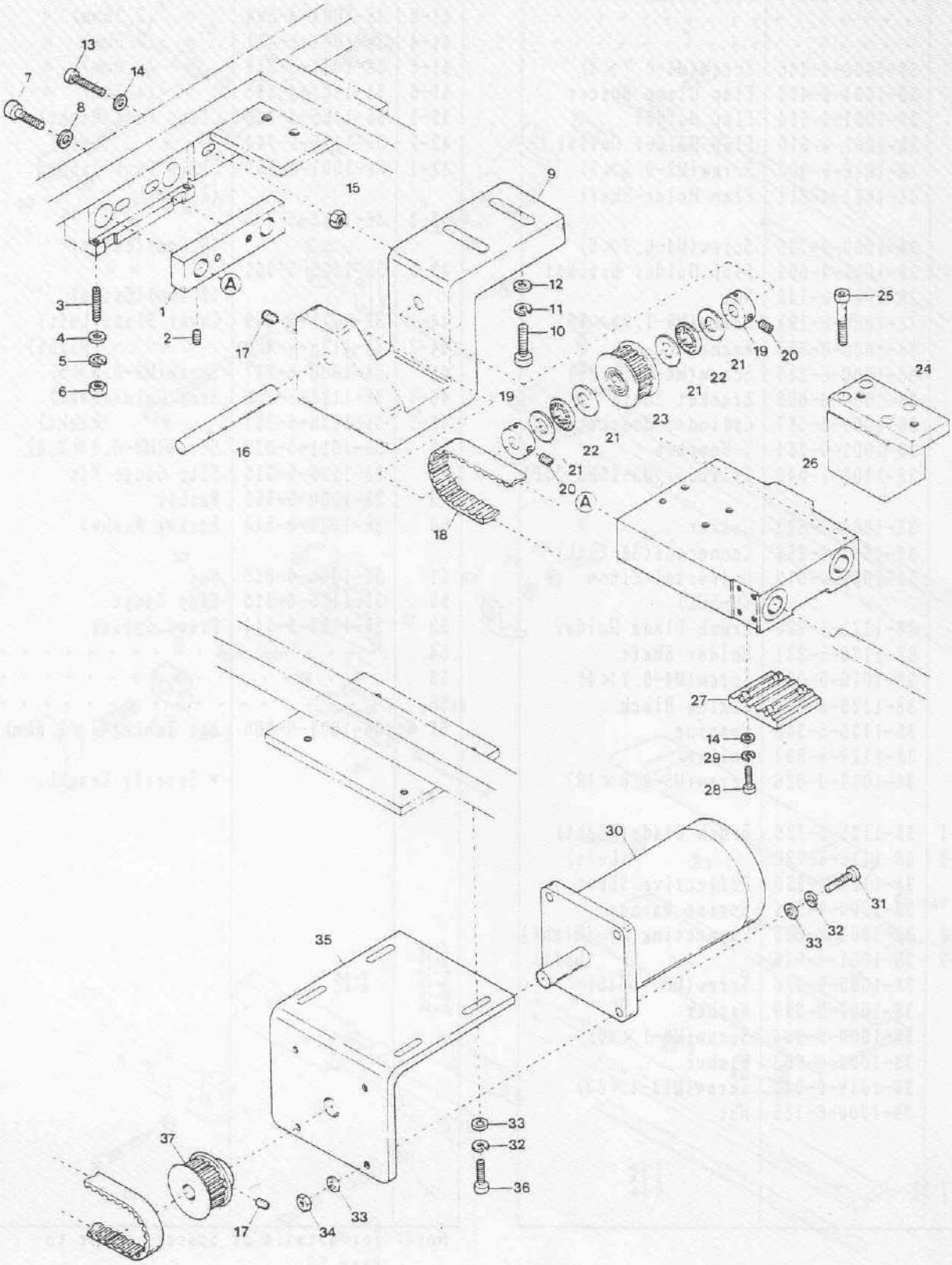
13
14
7
8
15
9
A
12
11
10
3
1
2
4
5
6
17
16
19
20
21
22
23
24
25
26
18
27
29
28
30
31
32
33
35
36
37
34

CARRIAGE DRIVE COMPONENTS

Det. No	Parts. No	Description
1	38-1001-4-101	Holder
2	38-1000-3-662	Screw(M6-1×6)
3	38-1000-9-738	Screw(M5-0.8×30)
4	38-1000-0-669	Washer
5	38-1000-0-600	Spring Washer
6	38-1000-0-009	Nut
7	38-1000-6-220	Screw(M8-1.25×40)
8	38-1000-0-429	Washer
9	38-1125-5-419	Sub-Pulley Holder
10	38-1000-9-761	Screw(M10-1.5×55)
11	38-1000-0-439	Spring Washer
12	38-1000-0-432	Washer
13	38-1000-9-755	Screw(M6-1×45)
14	38-1000-0-663	Washer
15	38-1000-0-011	Nut
16	38-1125-5-416	Sub-Pulley Shaft
17	38-1000-9-740	Screw(M6-1×10)
18	38-1125-5-412	Carriage Belt
19	38-1007-7-286	Collar
20	38-1000-3-635	Screw(1/4-40×6)
21	38-1001-4-572	Spacer
22	38-1001-4-571	Thrust Bearing
23	38-1125-5-413	Sub-Pulley
24	38-1125-5-424	Block
25	38-1000-9-759	Screw(M8-1.25×55)
26	38-1125-5-422	Slide Unit
27	38-1125-5-415	Belt Clamp
28	38-1000-9-754	Screw(M6-1×35)
29	38-1000-0-667	Spring Washer
30	38-1106-4-024	Drive Motor
31	38-1000-9-940	Screw(M8-1.25×35)
32	38-1000-0-676	Spring Washer
33	38-1000-0-666	Washer
34	38-1000-0-016	Nut
35	38-1125-5-410	Motor Bracket
36	38-1000-9-758	Screw(M8-1.25×30)
37	38-1125-5-411	Main Pulley

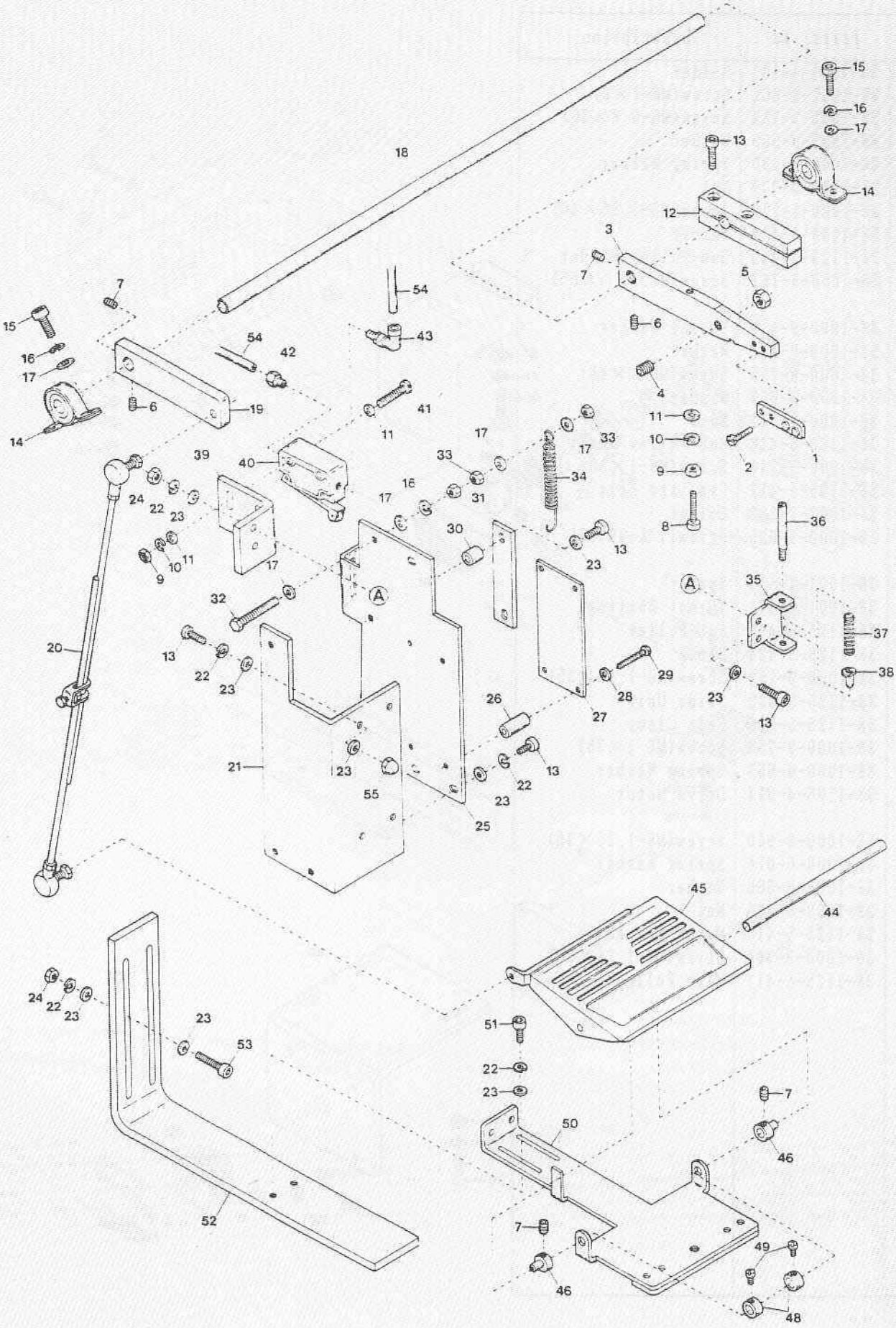
15
16
17
13
14
18
12
3
7
5
54
6
43
42
4
41
11
10
9
2
1
33
34
8
36
39
40
24
22
23
31
30
35
37
38
32
20
29
28
27
26
21
55
25
45
44
51
53
52
50
46
49
48

Det. No	Parts. No	Description
1	38-1001-4-767	Magnet Unit
2	38-1000-9-956	Screw(M3-0.5×10)
3	38-1001-4-763	Magnet Holder
4	38-1001-4-725	Spring Plunger
5	38-1000-0-054	Nut
6	38-1000-6-206	Screw(M5-0.8×8)
7	38-1000-6-212	〃 (M5-0.8×6)
8	38-1000-9-914	〃 (M4-0.7×40)
9	38-1000-0-015	Nut
10	38-1000-0-644	Spring Washer
11	38-1000-0-665	Washer
12	38-1001-4-918	Stop(Lower)
13	38-1000-9-970	Screw(M6-1×20)
14	38-1001-4-758	Shaft Bearing
15	38-1000-9-936	Screw(M8-1.25×20)
16	38-1000-0-676	Spring Washer
17	38-1000-0-666	Washer
18	38-1001-4-769	Shaft(Upper)
19	38-1001-4-919	Lever
20	38-1001-4-722	Pitman Unit
21	38-1001-4-921	Angle Plate
22	38-1000-0-667	Spring Washer
23	38-1000-0-663	Washer
24	38-1000-0-011	Nut
25	38-1001-4-920	Plate
26	38-1001-0-914	Spacer
27	38-1001-4-903	Treadle Switch Unit
28	38-1000-0-014	Washer
29	38-1000-9-957	Screw(M3-0.5×16)
30	38-1001-4-917	Spacer
31	38-1001-4-723	Plate
32	38-1000-9-978	Screw(M8-1.25×50)
33	38-1000-0-016	Nut
34	38-1001-4-757	Spring
35	38-1001-4-759	Stop Spring Bracket
36	38-1001-4-756	Stop Pin
37	38-1001-4-760	Stop Spring
38	38-1001-4-761	Stop(Upper)
39	38-1125-5-821	Limit Valve Support
40	38-1109-0-089	Limit Valve

Det. No	Parts. No	Description
41	38-1000-9-884	Screw(M4-0.7×30)
42	38-1001-0-055	Connector(EC4-PT1/8)
43	38-1001-0-057	Elbow Connector (φ4-1/8)
44	38-1125-5-130	Shaft(Lower)
45	38-1125-5-092	Threadle
46	38-1125-5-324	Shaft Collar
47	.....	.....
48	38-1003-2-719	Collar
49	38-1000-4-351	Screw(9/64-40×7)
50	38-1001-4-753	Treadle Support
51	38-1000-9-976	Screw(M6-1×15)
52	38-1001-5-226	Plate
53	38-1000-6-201	Screw(M6-1×50)
54 *	38-1001-0-260	Air Tubing(4×2.5mm)
55	38-1000-0-063	Cap Nut

* Specify Length.

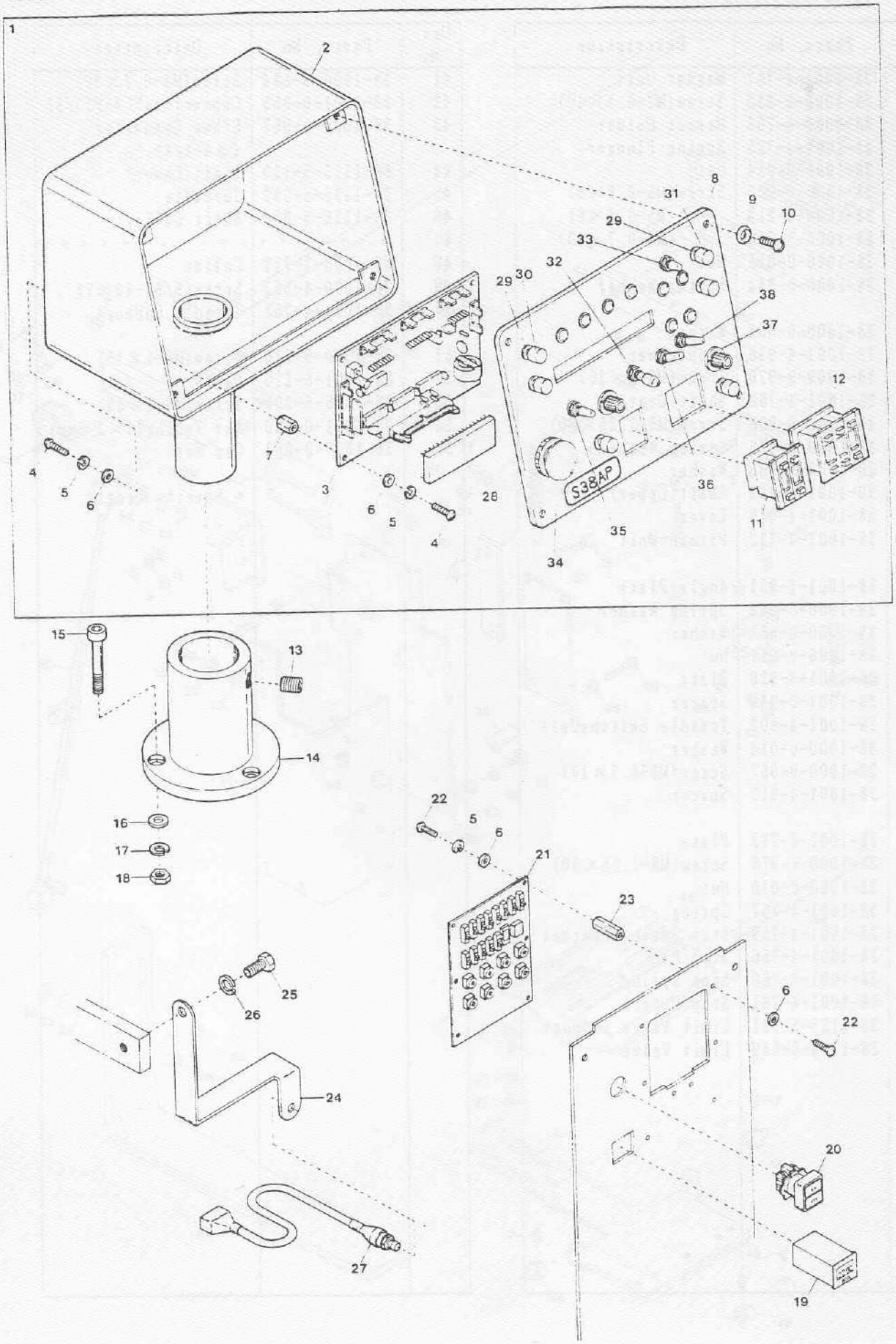
1
2
8
31
9
10
29
33
32
29 30
38
37
12
4
5
6
7
3
6
5
4
28
S38AP
36
35
34
11
15
13
14
16
17
18
22
5
6
21
23
6
22
25
26
24
20
27
19

Det. No	Parts. No	Description
1	38-1106-5-981	Positioner Motor, C. (3 Phase 200,220V)
2	38-1106-5-982	Motor Control Box (3 Phase)
3	38-1106-4-003	Synchronizer
4	38-1106-4-005	Positioner Motor (3 Phase)
5	38-1000-9-928	Screw(M10-1.5×30)
6	38-1000-0-439	Spring Washer
7	38-1030-0-041	Washer
8	38-1004-4-418	Pin Holder
9	38-1000-4-445	Screw(11/64-40×11)
10	38-1000-1-123	Washer
11	38-1000-0-334	Nut
12	38-1001-4-421	Positioning Pin
13	38-1002-2-837	Synchronizer Cushion
14	38-1000-9-736	Screw(M4-0.7×6)
15	38-1961-5-005	Motor Pulley(55mm)
16	38-1106-5-983	V-Belt(M51 inch)
17-1	38-1124-9-092	Power Source Box, C. (200V)
17-2	38-1124-9-097	〃 〃 (220V)
18	38-1120-0-210	Cable(1)(26 lines)
19	38-1120-0-211	Cable(2)(40 lines)
20	38-1125-5-497	Power Source Box
21	38-1105-7-074	Intermediate Board
22	38-1105-7-051	Control Board
23	38-1001-0-954	Board Support
24-1	38-1105-0-059	EPROM(Mark S38F107)
24-2	38-1105-0-069	(Mark S38F107E)
25-1	38-1106-9-006	Motor Start Relay (3 Phase 200V)
25-2	38-1106-9-007	〃 (3 Phase 220V)
25-3	38-1106-9-008	〃 (3 Phase 380V)
25-4	38-1106-9-009	〃 (3 Phase 440V)
25-5	38-1106-9-010	〃 (Single Phase 100V)
25-6	38-1106-9-012	〃 (Single Phase 220V)
26	38-1106-6-060	Amplifier Unit
27	38-1105-7-016	Power Board
28	38-1106-1-000	Valtage Regulator (5V,3A)
29	38-1106-4-039	Stepping Motor Drive
30	38-1001-0-910	Fuse(5A)

Det. No	Parts. No	Description
31	38-1001-0-846	Noise Filter
32	38-1106-0-003	Transformer
33	38-1125-5-498	Transformer Cover
34	38-1000-9-992	Screw(M4-0.7×10)
35	38-1000-0-644	Spring Washer
36	38-1000-0-665	Washer
37	38-1107-0-056	Bushing
38	38-1125-6-442	Motor Control Box Support
39	38-1125-6-441	Hanger
40	38-1000-0-669	Washer
41	38-1100-0-600	Spring Washer
42	38-1100-9-973	Screw(M5-0.8×10)
43	38-1107-0-068	Fuse Holder

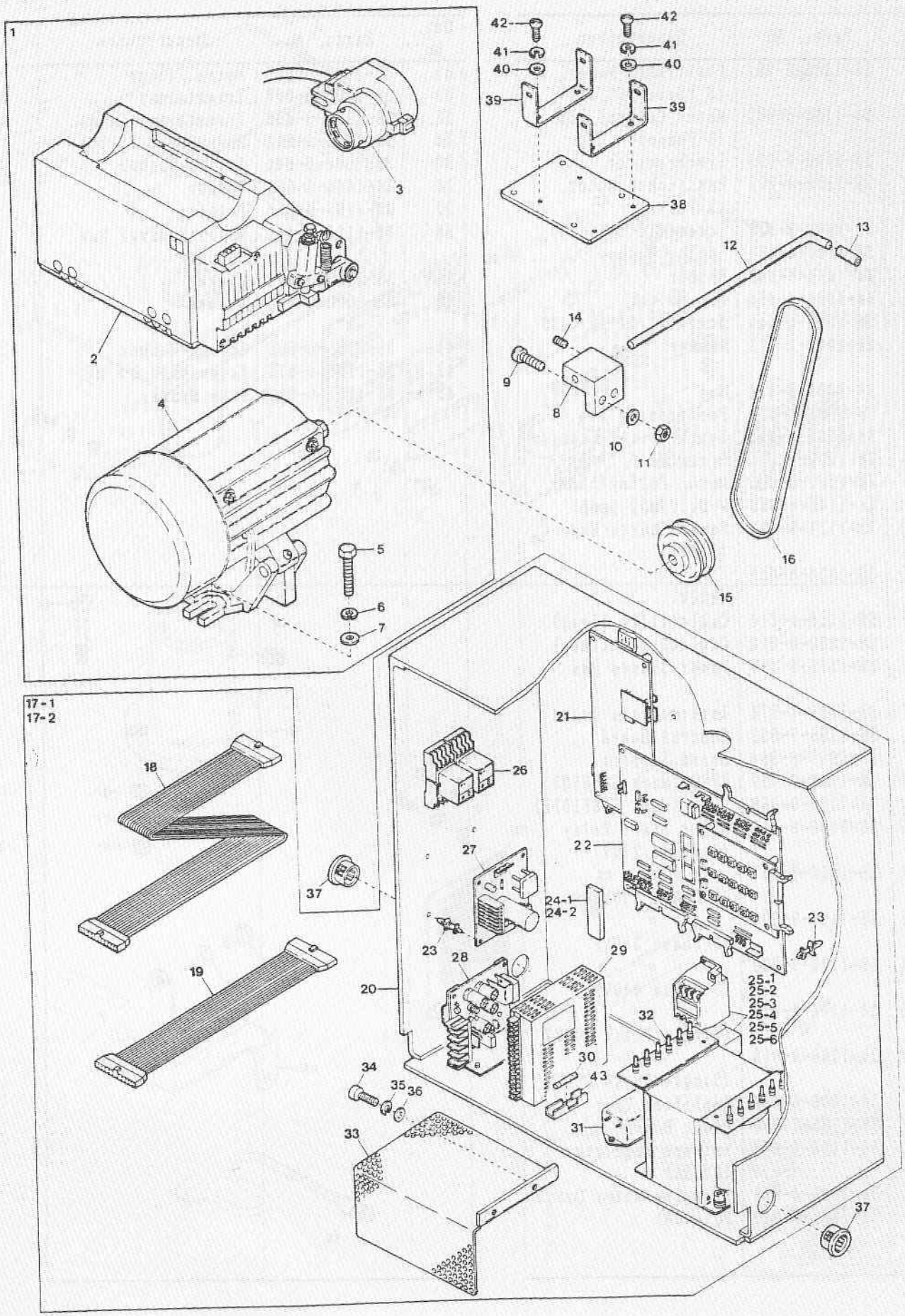
1
2
3
4
5
6
7
8
9
10
11
12
13
14
15
16
17-1
17-2
18
19
20
21
22
23
24-1
24-2
25-1
25-2
25-3
25-4
25-5
25-6
26
27
28
29
30
31
32
33
34
35
36
37
38
39
40
41
42
43

Det. No	Parts. No	Description
1	38-1001-0-227	Coupler
2	38-1001-0-265	Connector(EC8-PT1/4)
3	38-1001-0-278	Plug
4	38-1001-0-270	Connector(EPC-4)
5	38-1001-0-188	Pressure Gauge
6	38-1001-0-264	Connector(EC6-PT1/4)
7	38-1001-4-745	Reguiator Support
8	38-1000-9-976	Screw(M6-1×15)
9	38-1000-0-667	Spring Washer
10	38-1000-0-663	Washer
11	38-1001-0-184	Regulator(AW211-02B)
12	38-1001-0-269	Elbow Connector (EL8-PT1/4)
13	38-1001-0-024	Nipple(TN-2-1/4)
14	38-1001-0-267	Elbow Connector (EL6-PT1/4)
15	38-1001-0-239	Oil Mist Separator
16	38-1101-4-744	Air Distributor
17	38-1001-0-078	Connector(EC4-PT1/4)
18	38-1109-4-025	Seal Plug
19	38-1125-5-531	Valve Support
20	38-1000-9-749	Screw(M4-0.7×16)
21	38-1000-0-644	Spring Washer
22	38-1000-0-665	Washer
23	38-1109-0-127	Pneumatic Valve, C. (19 Valves)
24	38-1109-0-125	Manifold(19 Valves)
25	38-1109-0-042	Pneumatic Valve (3 Port)
26	38-1109-0-035	Pneumatic Valve (5 Port)
27	38-1109-0-037	Blind Cover
28	38-1039-0-031	Sticker
29	38-1000-0-623	Gasket
30	38-1109-4-009	Seal Plug
31	38-1012-0-027	Screw(M4-0.7×25)
32	38-1001-0-143	Silencer(MF-6 PT1/8)
33	38-1001-0-018	Connector
34	38-1001-0-266	Elbow Connector (EL6-PT1/8)
35 *	38-1001-0-260	Air Tubing(4×2.5mm)
36 *	38-1001-0-261	〃 (6×4mm)
37 *	38-1001-0-262	〃 (8×6mm)
		* Specify Length.

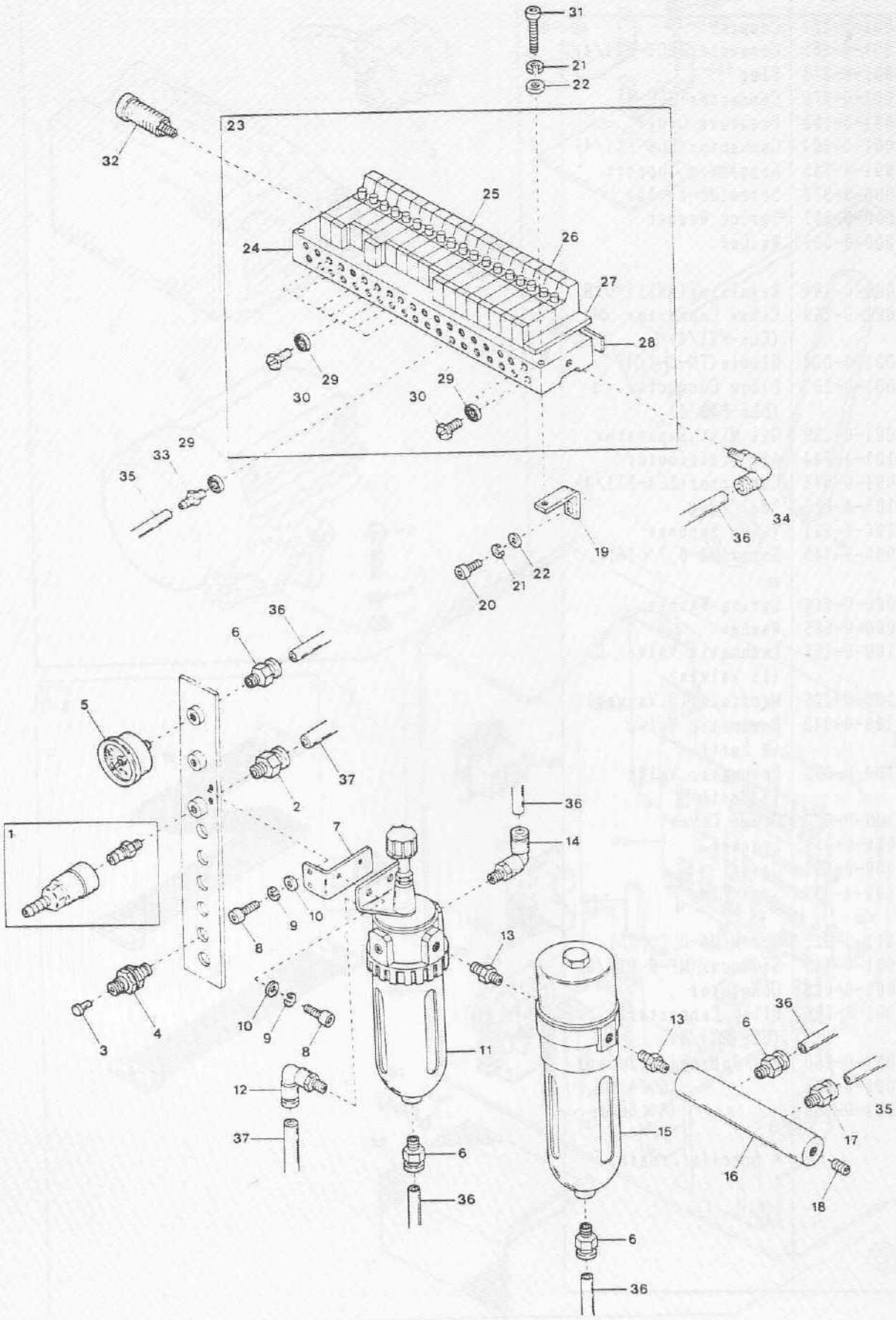
31
21
22
23
32
25
26
24
27
28
29
30
29
30
29
33
35
34
36
19
22
21
20
36
6
5
37
2
36
7
14
1
10
9
8
13
4
3
10
9
8
11
36
13
6
12
35
37
15
17
6
16
18
36
6
36

Det. No	Parts. No	Description
1	38-1009-9-140	Wrench(17×14mm)
2	38-1009-9-139	〃 (13×11mm)
3	38-1009-9-138	〃 (12×10mm)
4	38-1009-9-137	〃 (8×7mm)
5	38-1009-9-136	〃 (7×5.5mm)
6	38-1009-9-051	Tweezers
7	38-1001-5-154	Wrench(8×9mm)
8	38-1125-5-721	Center Knife
9-1	38-1001-4-244	Trim Blade (for 10,12,14mm)
9-2	38-1001-5-292	〃 (for 16,18,20mm)
10	38-1125-5-303	Tab Knife
11	38-1003-3-939	Hose Band
12	38-1001-4-589	Clamp Foot Rubber (3.5mm)
13	38-1001-4-590	Flap Foot Rubber
14	38-1125-6-230	Reflective Sheet
15	38-1125-6-470	Bobbin
16-1	02-0150-0-110	Needle, rd. pt., Fine(0)
16-2	02-0150-0-111	Needle, rd. pt., Medium(1)
16-3	02-0150-0-112	Needle, rd. pt., Heavy(2)
16-4	02-0150-0-113	Needle, rd. pt., Very Heavy(3)
16-5	02-0150-0-114	Needle, rd. pt., Extra Heavy(4)
17	38-1001-5-151	Screwdriver (5.5×190mm)
18	38-1003-7-919	Hexagonal Screw-driver (1.58mm 1/16 inch)
19	38-1001-5-152	Screwdriver (3.4×70mm)
20	38-1001-5-153	Screwdriver (1.9×52mm)
21	38-1001-5-180	Wrench(2mm)
22	38-1001-5-179	〃 (3mm)
23	38-1009-9-134	Wrench (8 pcs. par set)
24	38-1009-9-135	Accessory Box
25	38-1001-5-177	Oil Tank

Det. No	Parts. No	Description
26	38-1001-5-176	Oiler
27-1	38-1125-5-390	Tab Finger(10mm)
27-2	38-1125-5-391	〃 (12mm)
27-3	38-1125-5-392	〃 (14mm)
27-4	38-1125-5-393	〃 (16mm)
27-5	38-1125-5-394	〃 (18mm)
27-6	38-1125-5-395	〃 (20mm)
28	38-1125-6-467	Welt Pocket Gauge (Right)
29	38-1125-6-468	Welt Pocket Gauge (Left)
30-1	38-1001-5-434	Clamp Arm Gauge (2.0mm)
30-2	38-1001-5-435	〃 (2.5mm)
30-3	38-1001-4-801	〃 (2.75mm)
30-4	38-1001-5-436	〃 (3.0mm)
30-5	38-1001-5-437	〃 (3.5mm)
30-6	38-1001-5-438	〃 (4.0mm)
30-7	38-1001-4-802	〃 (4.5mm)
30-8	38-1001-5-439	〃 (8.0mm)
31	38-1125-6-471	Needle and Hook Timing Gauge
32-1	38-1001-4-803	Height Gauge(0.75mm)
32-2	38-1001-4-804	〃 (0.9mm)
33	38-1001-4-800	Needle Height Gauge
34	38-1125-6-472	Needle and Hook Timing Gauge
35	38-1001-4-807	Fixed Knife Positioning Gauge (2.95mm)

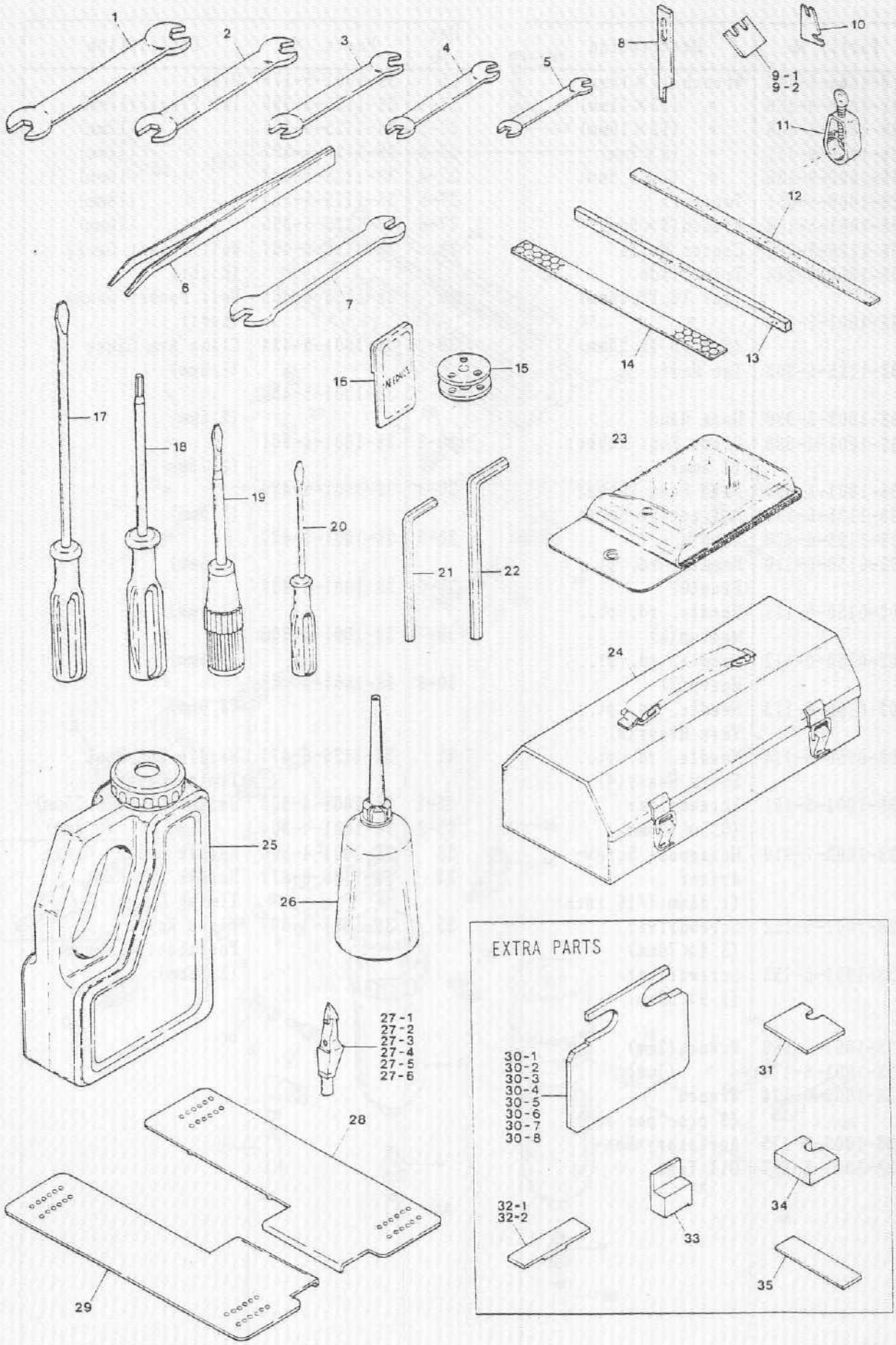
1
2
3
4
5
6
7
8
9-1
9-2
10
11
12
13
14
15
16
17
18
19
20
21
22
23
24
25
26
27-1
27-2
27-3
27-4
27-5
27-6
28
29
EXTRA PARTS
30-1
30-2
30-3
30-4
30-5
30-6
30-7
30-8
31
32-1
32-2
33
34
35

Det. No	Parts. No	Description
1	38-1125-5-984	Stacker, C.
2	38-1001-4-887	Guard
3	38-1000-3-662	Screw(M6-1×6)
4	38-1001-4-885	Table
5	38-1000-6-905	Wood Screw(φ5.1×20)
6	38-1001-4-889	Table Holder
7	38-1000-9-936	Screw(M8-1.25×20)
8	38-1000-0-676	Spring Washer
9	38-1000-0-666	Washer
10	38-1125-5-703	Rubber
11	38-1001-4-946	Arm
12	38-1001-4-884	Shaft
13	38-1001-4-758	Shaft Bearing
14	.....	.....
15	38-1001-4-401	Rod End
16	38-1000-0-432	Washer
17	38-1000-9-760	Screw(M10-1.5×35)
18	38-1109-1-077	Cylinder (REMD-SD-32×250)
19	38-1001-0-254	Speed Control
20	38-1109-8-007	Band
21	38-1106-6-013	Sensing Switch
22	38-1003-2-719	Collar
23	38-1000-4-351	Screw(9/64-40×7)
24	38-1001-4-883	Cylinder Shaft
25	38-1001-4-881	Shaft Holder
26	38-1000-9-753	Screw(M6-1×30)
27	38-1000-0-667	Spring Washer
28	38-1000-0-663	Washer
29	38-1109-1-078	Cylinder (REMD-SD-32×100)
30	38-1000-9-761	Screw(M10-1.5×55)
31	38-1000-0-439	Spring Washer
32	38-1000-0-260	Nut
33	38-1001-4-891	Stacker Support
34	38-1000-9-758	Screw(M8-1.25×30)
35	.....	.....
36	38-1001-4-944	Cloth Clamp
37	38-1001-4-890	Stacker Base
38	38-1000-9-759	Screw(M8-1.25×55)
39	38-1000-0-016	Nut
40	38-1001-4-942	Cylinder Holder

Det. No	Parts. No	Description
41	38-1000-9-970	Screw(M6-1×20)
42	.....	.....
43	.....	.....
44	38-1001-4-734	Holder(97mm)
45	38-1001-5-235	Caster
46	.....	.....
47 *	38-1001-0-260	Air Tubing(4×2.5mm)
48-1	38-1001-1-095	Marker(1)
48-2	38-1001-1-096	〃 (2)
48-3	38-1001-1-097	〃 (3)
48-4	38-1001-1-098	〃 (4)
49	38-1001-4-580	Pipe Cap
50	38-1000-0-425	Washer
51	38-1000-0-421	Nut

* Specify Length.

TROUSER PANEL STACKER

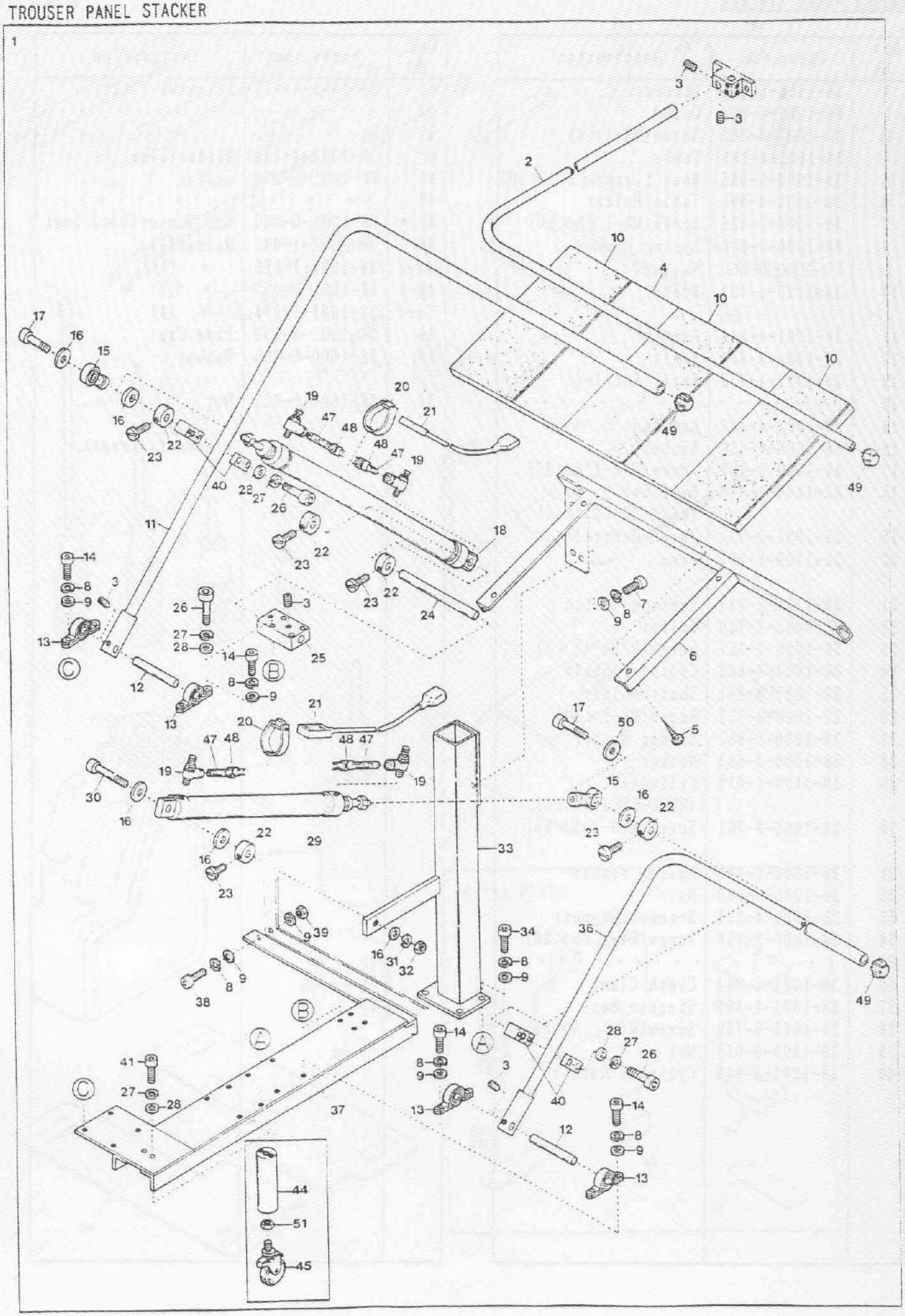

Det. No	Parts. No	Description
1	38-1125-5-899	Work Remover, C.
2	38-1001-4-858	Cloth Clamp Plate
3	38-1000-9-776	Screw(M4-0.7×10)
4	38-1001-4-928	Rubber
5	38-1001-4-929	Clamp Plate Rubber
6	38-1001-4-856	Clamp Plate Bracket
7	38-1000-9-800	Screw(M3-0.5×30)
8	38-1000-0-014	Washer
9	38-1000-0-012	Nut
10	38-1001-4-874	Shaft Holder(Front)
11	38-1000-3-662	Screw(M6-1×6)
12	38-1001-4-867	Bushing
13	38-1001-4-863	Shaft
14	38-1000-0-037	Pin
15	38-1001-4-866	Bushing
16	38-1001-4-865	Shaft Holder(Rear)
17	38-1001-4-869	Collar
18	38-1016-0-001	Screw(M4-0.7×4)
19	38-1000-0-011	Nut
20	38-1000-6-199	Screw(M10-1.5×20)
21	38-1000-0-432	Washer
22	38-1001-4-870	Cylinder Guide Plate
23	38-1000-9-775	Screw(M3-0.5×10)
24	38-1001-4-864	Cylinder Support
25	38-1000-9-754	Screw(M6-1×35)
26	38-1000-0-663	Washer
27	38-1001-4-876	Arm(Upper)
28	38-1000-0-054	Nut
29	38-1001-4-868	Connecting Shaft
30	38-1001-0-296	Cylinder (REMD-SD-20×70)
31	38-1001-0-057	Elbow Connector (φ4-1/8)
32	38-1001-0-055	Connector(φ4-1/8)
33	38-1106-6-013	Sensing Switch
34	38-1001-0-301	Band
35	38-1000-9-758	Screw(M8-1.25×30)
36	38-1000-0-666	Washer
37	38-1000-0-676	Spring Washer
38	38-1000-0-016	Nut
39	38-1001-4-877	Arm(Lower)
40	38-1003-6-133	Cord Clamp(φ8.4-5N)

Det. No	Parts. No	Description
41	38-1000-9-974	Screw(M4-0.7×10)
42	38-1001-4-356	Collar
43	38-1000-6-212	Screw(M5-0.8×6)
44	38-1001-4-871	Shaft
45	38-1001-4-654	Bushing
46	38-1000-3-655	Screw(M4-0.7×10)
47	38-1001-4-861	Shaft Bearing
48	38-1000-9-970	Screw(M6-1×20)
49	38-1000-0-667	Spring Washer
50	38-1001-4-401	Rod End
51	38-1000-9-761	Screw(M10-1.5×55)
52	38-1003-2-719	Collar
53	38-1000-0-260	Nut
54	38-1109-1-079	Cylinder (REMD-SD-32×150)
55	38-1001-0-254	Speed Control
56	38-1109-8-007	Band
57	38-1001-4-872	Cylinder Pin
58	38-1001-4-850	Cylinder Holder
59	38-1000-9-976	Screw(M6-1×15)
60	38-1001-4-873	Table Support
61	38-1001-4-878	Remover Base
62	38-1000-9-759	Screw(M8-1.25×55)
63	38-1001-4-875	Table
64	38-1001-4-914	Knob
65	38-1000-0-665	Washer
66	.....	.....
67	.....	.....
68	38-1001-4-734	Holder(97mm)
69	38-1001-5-235	Caster
70 *	38-1001-0-260	Air Tubing(4×2.5mm)
71-1	38-1001-1-095	Marker(1)
71-2	38-1001-1-096	〃 (2)
71-3	38-1001-1-097	〃 (3)
71-4	38-1001-1-098	〃 (4)
72	38-1000-9-977	Screw(M6-1×25)
73	38-1000-4-351	Screw(9/64-40×7)
74	38-1000-0-421	Nut

* Specify Length.

WORK REMOVER

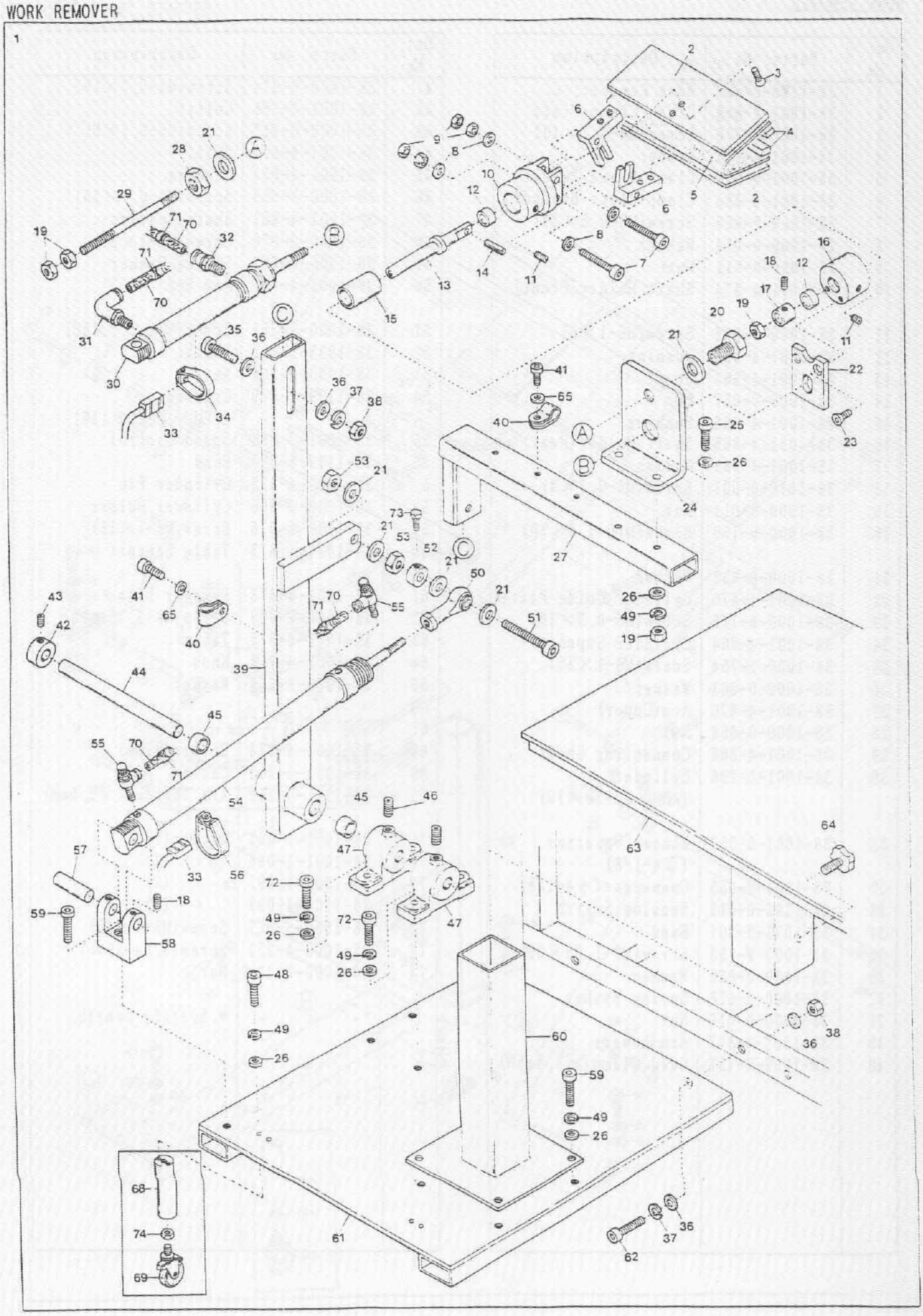

TROUSER AIR EJECTOR

Det. No	Parts. No	Description
1	38-1001-4-947	Panel Air Ejector, C.
2	38-1001-0-313	Elbow Connector
3	38-1001-4-935	Air Nozzle
4	38-1001-4-938	Air Nozzle Support
5	38-1000-9-976	Screw(M6-1×15)
6	38-1001-4-936	Block
7	38-1000-3-662	Screw(M6-1×6)
8	38-1001-4-937	Positioning Shaft
9	38-1001-0-148	Pilot Valve
10	38-1000-6-905	Wood Screw(φ5.1×20)
11	38-1001-0-269	Elbow Connector (EL8-PT1/4)
12	38-1001-0-264	Connector(EC6-PT1/4)
13	38-1001-0-057	Elbow Connector (EL4-PT1/8)
14 *	38-1001-0-260	Air Tubing(4×2.5mm)
15 *	38-1001-0-261	〃 (6×4mm)
16 *	38-1001-0-262	〃 (8×6mm)
17	38-1001-1-095	Marker(1)
18	38-1003-5-767	Cord Stay
		* Specify Length.

TROUSER AIR EJECTOR

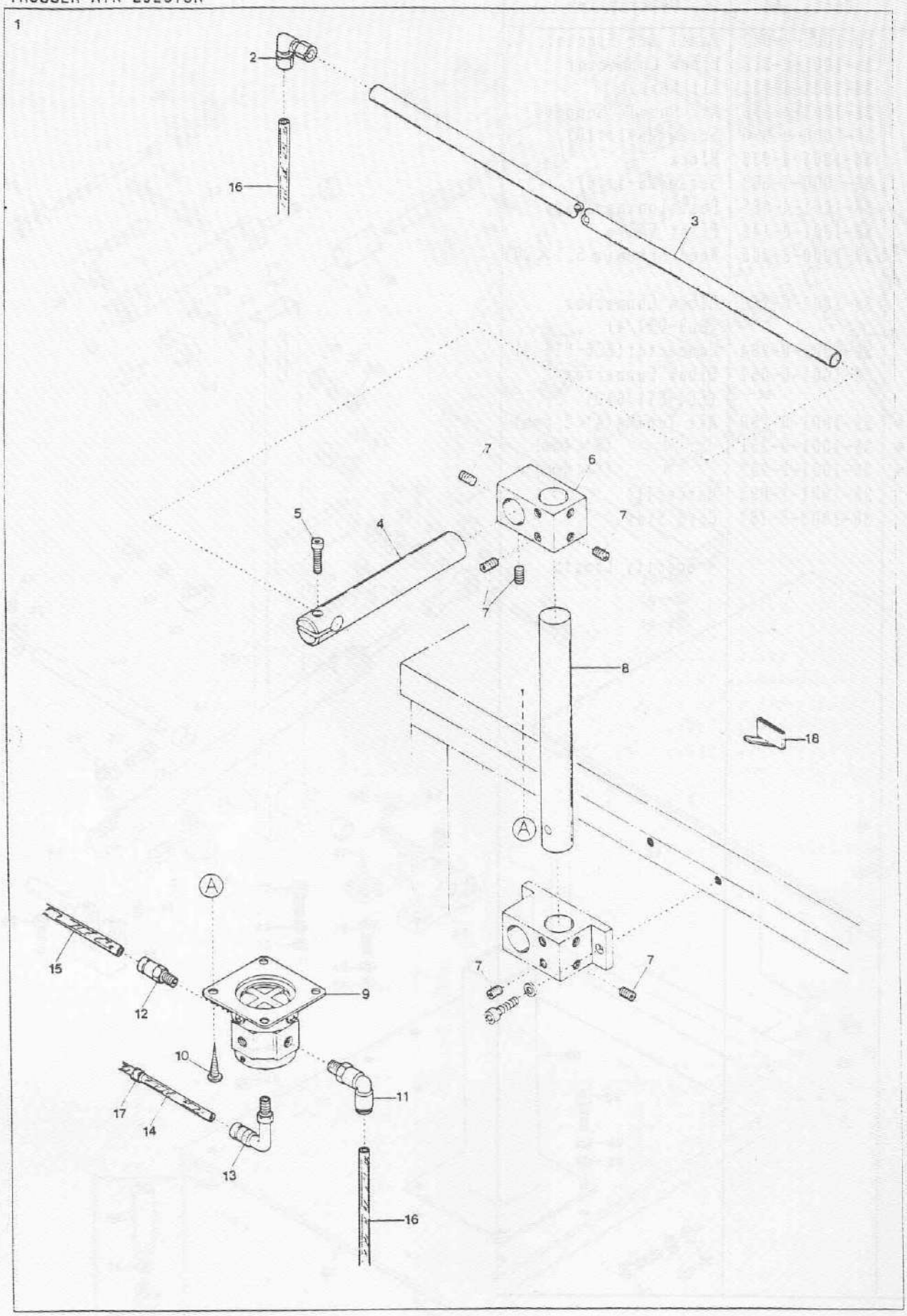

LARGE BOBBIN ASSOCIATE PARTS(EXTRA PARTS)

Det. No	Parts. No	Description
1	38-1125-5-986	Large Bobbin, C.
2	38-1900-0-031	Thread Take-up Cover
3	38-1900-0-037	Thread Take-up
4	38-1000-8-269	Wick
5	38-1900-0-038	Thread Take-up Lever Slide Block
6	38-1000-8-272	Wick
7	38-1001-5-030	Pusher
8	38-1900-0-064	Bobbin Case Opener
9	38-1000-8-207	Screw(3.57-40×8)
10	38-1093-0-001	Washer
11	38-1900-0-062	Opener Crank
12	38-1900-0-061	Opener Link
13	38-1001-5-071	Link Stud Opener
14	38-1000-8-258	Washer(4.76)
15	38-1093-0-000	Nut
16	38-1000-8-280	Felt
17	38-1900-0-063	Opener Crank Stud
18	38-1001-5-073	Pipe
19	38-1000-8-241	Screw(4.76)
20	38-1900-0-057	Rotary Hook Shaft Bushing(Lower)
21	38-1000-8-240	Screw(4.76)
22	38-1125-5-580	Bobbin
23	38-1900-0-094	Anti-Over-Run Spring
24	38-1125-5-987	Outer Rotary Hook Assembly
25	38-1900-0-060	Tension Adjusting Spring
26	38-1000-8-209	Tension Adjusting Screw
27	38-1000-8-210	Screw
28	38-1900-0-058	Rotary Hook Shaft Bushing(Upper)
29	. . . . .	. . . . .
30	38-1900-0-088	Oil Gauge
31	38-1001-5-086	Oil Pipe
32	38-1900-0-056	Rotary Hook Base (Left)
33	38-1001-5-083	Packing
34	38-1001-5-084	Oil Reservoir(Left)
35	38-1900-0-066	Rotary Hook Base (Right)
36	38-1001-5-088	Oil Reservoir(Right)
37	38-1000-8-226	Oil Adjusting Screw
38	38-1000-8-260	Washer
39	38-1000-8-264	Spring Washer
40	38-1000-8-255	Nut(4.37)

LARGE BOBBIN

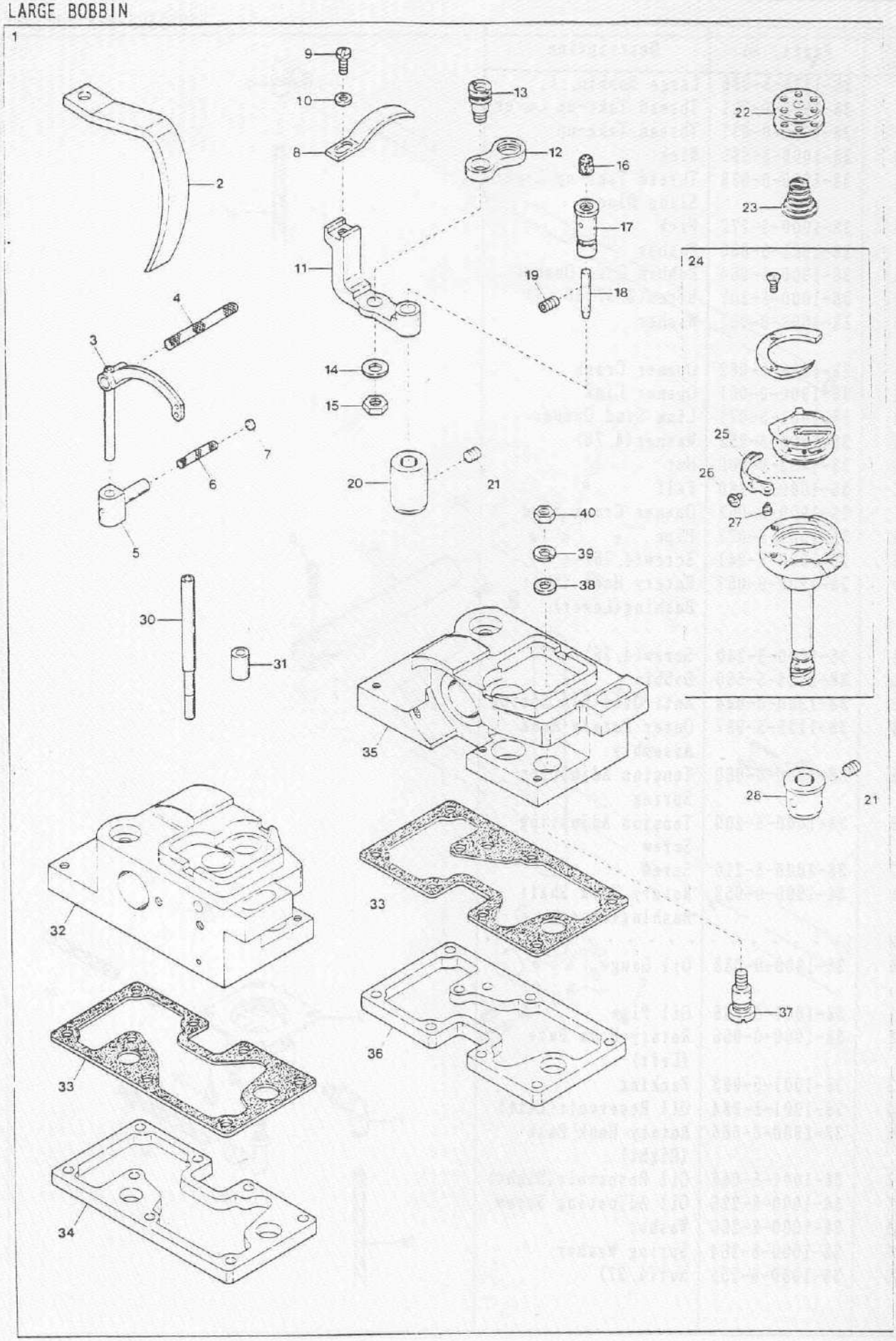

Series 38AP CLASS LIST of MAIN SPARE PARTS 3/4

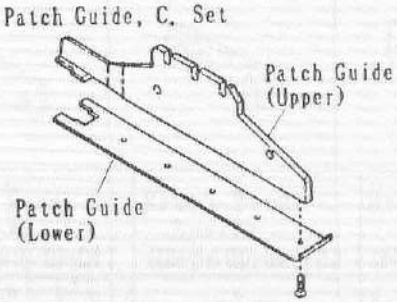

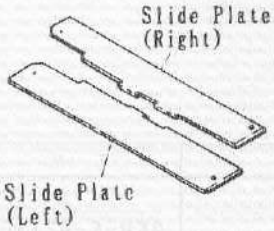

Spare Parts / Models	Jumping Guide Shaft	Jumping Guide Block	Patch Guide, C. Set	Patch Guide (Upper)	Patch Guide (Lower)	Slide Plate (Left)	Slide Plate (Right)
S38AP-C10-175S	38-1001-4-521	38-1001-4-537	38-1125-5-803	38-1125-5-754	38-1001-5-371	38-1125-5-930	38-1125-5-931
175D	〃	〃	38-1125-5-804	38-1125-5-755	38-1001-5-364	〃	〃
260T	〃	〃	38-1125-6-444	38-1125-5-754	38-1125-6-438	〃	〃
C12-220S	38-1001-4-522	38-1001-4-538	38-1125-5-807	38-1125-5-756	38-1001-5-373	〃	〃
220D	〃	〃	38-1125-5-808	38-1125-5-757	38-1001-5-366	〃	〃
340T	〃	〃	38-1125-6-445	38-1125-5-756	38-1125-6-439	〃	〃
C14-270S	38-1001-5-200	38-1001-5-202	38-1125-5-809	38-1125-5-758	38-1001-5-376	〃	〃
270D	〃	〃	38-1125-5-810	38-1125-5-759	38-1001-5-369	〃	〃
400T	〃	〃	38-1125-6-446	38-1125-5-758	38-1125-6-440	〃	〃
C16-310S	38-1001-5-296	38-1001-5-293	38-1125-5-813	38-1125-5-760	38-1125-5-570	38-1125-5-932	38-1125-5-933
310D	〃	〃	38-1125-5-814	38-1125-5-761	38-1125-5-571	〃	〃
470T	〃	〃	38-1125-6-447	38-1125-5-760	38-1125-6-349	〃	〃
C18-350S	38-1001-5-297	38-1001-5-294	38-1125-5-815	38-1125-5-762	38-1125-5-572	38-1125-5-934	38-1125-5-935
350D	〃	〃	38-1125-5-816	38-1125-5-763	38-1125-5-573	〃	〃
530T	〃	〃	38-1125-6-382	38-1125-5-762	38-1125-6-391	〃	〃
C20-390S	38-1001-5-298	38-1001-5-295	38-1125-5-817	38-1125-5-764	38-1125-5-574	38-1125-5-936	38-1125-5-937
390D	〃	〃	38-1125-5-818	38-1125-5-765	38-1125-5-575	〃	〃
590T	〃	〃	38-1125-6-384	38-1125-5-764	38-1125-6-393	〃	〃

Series 38AP CLASS LIST of MAIN SPARE PARTS 1/4

Spare Parts / Models	Needle Head (Left), C. Set	Needle Head (Left)	Needle Head (Right), C. Set	Needle Head (Right)	Throat Plate	Pick-up	Trim Blade
S38AP-C10-175S	38-1900-0-130	38-1900-0-154	38-1900-0-131	38-1900-0-155	38-1001-4-426	38-1001-4-483	38-1001-4-244
175D	〃	〃	〃	〃	〃	〃	〃
260T	〃	〃	〃	〃	〃	〃	〃
C12-220S	38-1900-0-132	38-1900-0-156	38-1900-0-133	38-1900-0-157	38-1001-4-427	〃	〃
220D	〃	〃	〃	〃	〃	〃	〃
340T	〃	〃	〃	〃	〃	〃	〃
C14-270S	38-1900-0-134	38-1900-0-158	38-1900-0-135	38-1900-0-159	38-1001-4-489	〃	〃
270D	〃	〃	〃	〃	〃	〃	〃
400T	〃	〃	〃	〃	〃	〃	〃
C16-310S	38-1900-0-136	38-1900-0-160	38-1900-0-137	38-1900-0-161	38-1001-5-254	38-1001-5-302	38-1001-5-292
310D	〃	〃	〃	〃	〃	〃	〃
470T	〃	〃	〃	〃	〃	〃	〃
C18-350S	38-1900-0-138	38-1900-0-162	38-1900-0-139	38-1900-0-163	38-1001-5-255	〃	〃
350D	〃	〃	〃	〃	〃	〃	〃
530T	〃	〃	〃	〃	〃	〃	〃
C20-390S	38-1900-0-140	38-1900-0-164	38-1900-0-141	38-1900-0-165	38-1001-5-256	38-1125-5-696	〃
390D	〃	〃	〃	〃	〃	〃	〃
590T	〃	〃	〃	〃	〃	〃	〃

Series 38AP CLASS LIST of MAIN SPARE PARTS 4/4

Spare Parts / Models	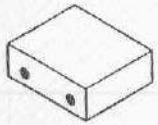 Clamp Foot Support	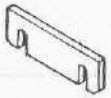 Clamp Foot Spacer (Left Side)	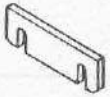 Clamp Foot Spacer (Right Side)	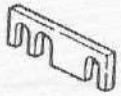 Brush Blade Spacer (Left Side)	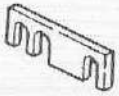 Brush Blade Spacer (Right Side)
S38AP-C10-175S	38-1125-5-344	38-1125-5-576 38-1001-4-594	38-1125-5-576 38-1001-4-594	———	38-1125-6-396
175D	〃	38-1125-5-576 38-1001-4-594	38-1125-5-576 38-1001-4-594	38-1125-6-396	38-1125-6-396
260T	〃	38-1001-4-594	———	———	———
C12-220S	〃	38-1001-4-593	38-1001-4-593 38-1001-4-595	———	38-1125-6-453
220D	〃	38-1001-4-593 38-1001-4-595	38-1001-4-593	38-1125-6-453	38-1125-6-453
340T	〃	38-1001-4-595	———	———	———
C14-270S	〃	38-1001-4-593 38-1001-5-411	38-1001-4-593 38-1001-5-411	———	38-1125-6-453
270D	〃	38-1001-4-593 38-1001-5-411	38-1001-4-593 38-1001-5-411	38-1125-6-453	38-1125-6-453
400T	〃	38-1001-4-593	———	———	———
C16-310S	38-1125-6-448	38-1001-5-219	38-1001-5-411 38-1001-5-219	———	38-1125-6-455
310D	〃	38-1001-5-411 38-1001-5-219	38-1001-5-219	38-1125-6-455	38-1125-6-455
470T	〃	38-1001-5-411	———	———	———
C18-350S	〃	38-1001-4-595	38-1001-5-219 38-1001-4-595	———	38-1125-6-455
350D	〃	38-1001-5-219 38-1001-4-595	38-1001-4-595	38-1125-6-455	38-1125-6-455
530T	〃	38-1001-5-219	———	———	———
C20-390S	〃	38-1001-4-593 38-1001-5-411	38-1001-4-593 38-1001-5-411 38-1001-4-595	———	38-1125-6-469
390D	〃	38-1001-4-593 38-1001-5-411 38-1001-4-595	38-1001-4-593 38-1001-5-411	38-1125-6-469	38-1125-6-469
590T	〃	38-1001-4-595	———	———	———

Series 38AP CLASS LIST of MAIN SPARE PARTS 2/4

Spare Parts / Models							
	Thread Holder (Left)	Thread Holder (Right)	Movable Knife	Fixed Knife (Left)	Fixed Knife (Right)	Tab Finger, C.	Tab Knife
S38AP-C10-175S	38-1125-5-431	38-1125-5-430	38-1001-4-503	38-1001-4-506	38-1001-4-505	38-1125-6-426	38-1125-6-443
175D	〃	〃	〃	〃	〃	〃	〃
260T	〃	〃	〃	〃	〃	〃	〃
C12-220S	〃	〃	38-1001-4-504	38-1001-4-508	38-1001-4-507	38-1125-6-427	〃
220D	〃	〃	〃	〃	〃	〃	〃
340T	〃	〃	〃	〃	〃	〃	〃
C14-270S	〃	〃	38-1001-5-201	38-1001-4-506	38-1001-4-505	38-1125-6-428	〃
270D	〃	〃	〃	〃	〃	〃	〃
400T	〃	〃	〃	〃	〃	〃	〃
C16-310S	38-1125-5-601	38-1125-5-600	38-1001-5-299	〃	〃	38-1125-6-429	〃
310D	〃	〃	〃	〃	〃	〃	〃
470T	〃	〃	〃	〃	〃	〃	〃
C18-350S	〃	〃	38-1001-5-300	〃	〃	38-1125-6-430	〃
350D	〃	〃	〃	〃	〃	〃	〃
530T	〃	〃	〃	〃	〃	〃	〃
C20-390S	〃	〃	38-1001-5-301	〃	〃	38-1125-6-431	〃
390D	〃	〃	〃	〃	〃	〃	〃
590T	〃	〃	〃	〃	〃	〃	〃

INDEX

INDEX

INDEX

INDEX

INDEX

INDEX

INDEX

INDEX

INDEX

INDEX

Series 38AP CLASS LIST of MAIN SPARE PARTS 2/4

Spare Parts / Models	Thread Holder (Left)	Thread Holder (Right)	Movable Knife	Fixed Knife (Left)	Fixed Knife (Right)	Tab Finger, C.	Tab Knife
S38AP-C10-175S	38-1125-5-431	38-1125-5-430	38-1001-4-503	38-1001-4-506	38-1001-4-505	38-1125-6-426	38-1125-6-443
175D	〃	〃	〃	〃	〃	〃	〃
260T	〃	〃	〃	〃	〃	〃	〃
C12-220S	〃	〃	38-1001-4-504	38-1001-4-508	38-1001-4-507	38-1125-6-427	〃
220D	〃	〃	〃	〃	〃	〃	〃
340T	〃	〃	〃	〃	〃	〃	〃
C14-270S	〃	〃	38-1001-5-201	38-1001-4-506	38-1001-4-505	38-1125-6-428	〃
270D	〃	〃	〃	〃	〃	〃	〃
400T	〃	〃	〃	〃	〃	〃	〃
C16-310S	38-1125-5-601	38-1125-5-600	38-1001-5-299	〃	〃	38-1125-6-429	〃
310D	〃	〃	〃	〃	〃	〃	〃
470T	〃	〃	〃	〃	〃	〃	〃
C18-350S	〃	〃	38-1001-5-300	〃	〃	38-1125-6-430	〃
350D	〃	〃	〃	〃	〃	〃	〃
530T	〃	〃	〃	〃	〃	〃	〃
C20-390S	〃	〃	38-1001-5-301	〃	〃	38-1125-6-431	〃
390D	〃	〃	〃	〃	〃	〃	〃
590T	〃	〃	〃	〃	〃	〃	〃

Series 38AP CLASS LIST of MAIN SPARE PARTS 4/4

Spare Parts / Models	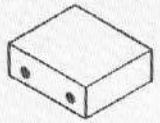 Clamp Foot Support	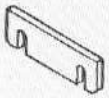 Clamp Foot Spacer (Left Side)	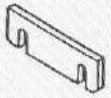 Clamp Foot Spacer (Right Side)	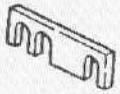 Brush Blade Spacer (Left Side)	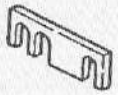 Brush Blade Spacer (Right Side)
S38AP-C10-175S	38-1125-5-344	38-1125-5-576 38-1001-4-594	38-1125-5-576 38-1001-4-594	———	38-1125-6-396
175D	〃	38-1125-5-576 38-1001-4-594	38-1125-5-576 38-1001-4-594	38-1125-6-396	38-1125-6-396
260T	〃	38-1001-4-594	———	———	———
C12-220S	〃	38-1001-4-593	38-1001-4-593 38-1001-4-595	———	38-1125-6-453
220D	〃	38-1001-4-593 38-1001-4-595	38-1001-4-593	38-1125-6-453	38-1125-6-453
340T	〃	38-1001-4-595	———	———	———
C14-270S	〃	38-1001-4-593 38-1001-5-411	38-1001-4-593 38-1001-5-411	———	38-1125-6-453
270D	〃	38-1001-4-593 38-1001-5-411	38-1001-4-593 38-1001-5-411	38-1125-6-453	38-1125-6-453
400T	〃	38-1001-4-593	———	———	———
C16-310S	38-1125-6-448	38-1001-5-219	38-1001-5-411 38-1001-5-219	———	38-1125-6-455
310D	〃	38-1001-5-411 38-1001-5-219	38-1001-5-219	38-1125-6-455	38-1125-6-455
470T	〃	38-1001-5-411	———	———	———
C18-350S	〃	38-1001-4-595	38-1001-5-219 38-1001-4-595	———	38-1125-6-455
350D	〃	38-1001-5-219 38-1001-4-595	38-1001-4-595	38-1125-6-455	38-1125-6-455
530T	〃	38-1001-5-219	———	———	———
C20-390S	〃	38-1001-4-593 38-1001-5-411	38-1001-4-593 38-1001-5-411 38-1001-4-595	———	38-1125-6-469
390D	〃	38-1001-4-593 38-1001-5-411 38-1001-4-595	38-1001-4-593 38-1001-5-411	38-1125-6-469	38-1125-6-469
590T	〃	38-1001-4-595	———	———	———