SiRUBA GAGE PARTS LIST	Series	Remark	Page	Date
	DL7000	BM1/BH1	1/1	2013/01/01

DL7000-BM/BH規格件表 CONVERSION CHART

P1

MODEL	SUB-CLASS	OPERATING PANEL	NEEDLE PLATE	FEED DOG	PRESSER FOOT	HOOK ASM	BOBBIN CASE ASM	BOBBIN	NEEDLE	HAND WHEEL	MOTOR
機 型	規 格	操作盒	針 板	送 具	押 具	梭 頭	梭 殼	梭 子	針 號	手輪	馬達
DL7000-BM1-10 ~ DL7000-BM1-13	薄中布 至 厚布料	LU280-A	E704	D701	P701	G121	G202	G303	DBX1#14	LH500-E	T50D8S11
DL7000-BM1A-10~DL7000-BM1A-13			E704D	D702	P701	G121	G202	G303			
DL7000-BH1-10 ~ DL7000-BH1-13			E711	D711	P711	G125J	G202	G303	DBX1#21		
DL7000-BH1A-03~DL7000-BH1A-13			E711D	D711D	P711D	G125J	G202	G303			

SiRUBA MODEL COMPARE LIST	Series	Remark	Page	Date
	DL918/DL7000	BM1/BH1	1/2	2012/11/01

DL918/DL7000 型別件表

							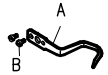	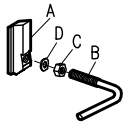		
MODEL	SUB-CLASS	SPRING	SPRING	NEEDLE BAR	BUSING	THRAD TAKE UP LEVER	THREAD GUIDE	THREAD GUIDE BAR	THREAD GUIDE	ADJUSTING KNOB
機　型	規　格	控線彈簧	控線彈簧	針棒	襯套	天秤	導線片	導線桿	導線環片	調整旋鈕
BM-XX	薄布料 ～ 中厚料	LA31	LA22	LG104H LG04	LG07	LG13	A LB06 B SK241	–	LG09	LC623G
BH-XX	中厚料 ～ 厚布料	LA131	LA122	LG104	LG107	LG113	–	A LB100 B LB106 C NK23 D WK09	LG109	LC600G

SiRUBA MODEL COMPARE LIST	Series	Remark	Page	Date
	DL918/DL7000	BM1/BH1	2/2	2013/06/10

DL918/DL7000 型別件表

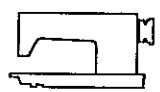				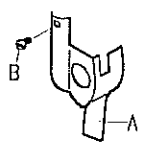				
MODEL	SUB-CLASS	CRANK SHAFT	FIXED PIN	COVER				
機　型	規　格	曲軸	固定銷	護蓋				
BM-XX	薄布料 ~ 中厚料	LG15	LC13	A	LG01			
				B	SK219			
BH-XX	中厚料 ~ 厚布料	LG615	LC613	A	LG101			
				B	SK501			

SIRUBA PARTS LIST	Series	Parts Group	Subclass / Remark	Page
	DL7000-BM1/BH1	LA	#:Use for BH1	1/2
				Date
				2013/11/15

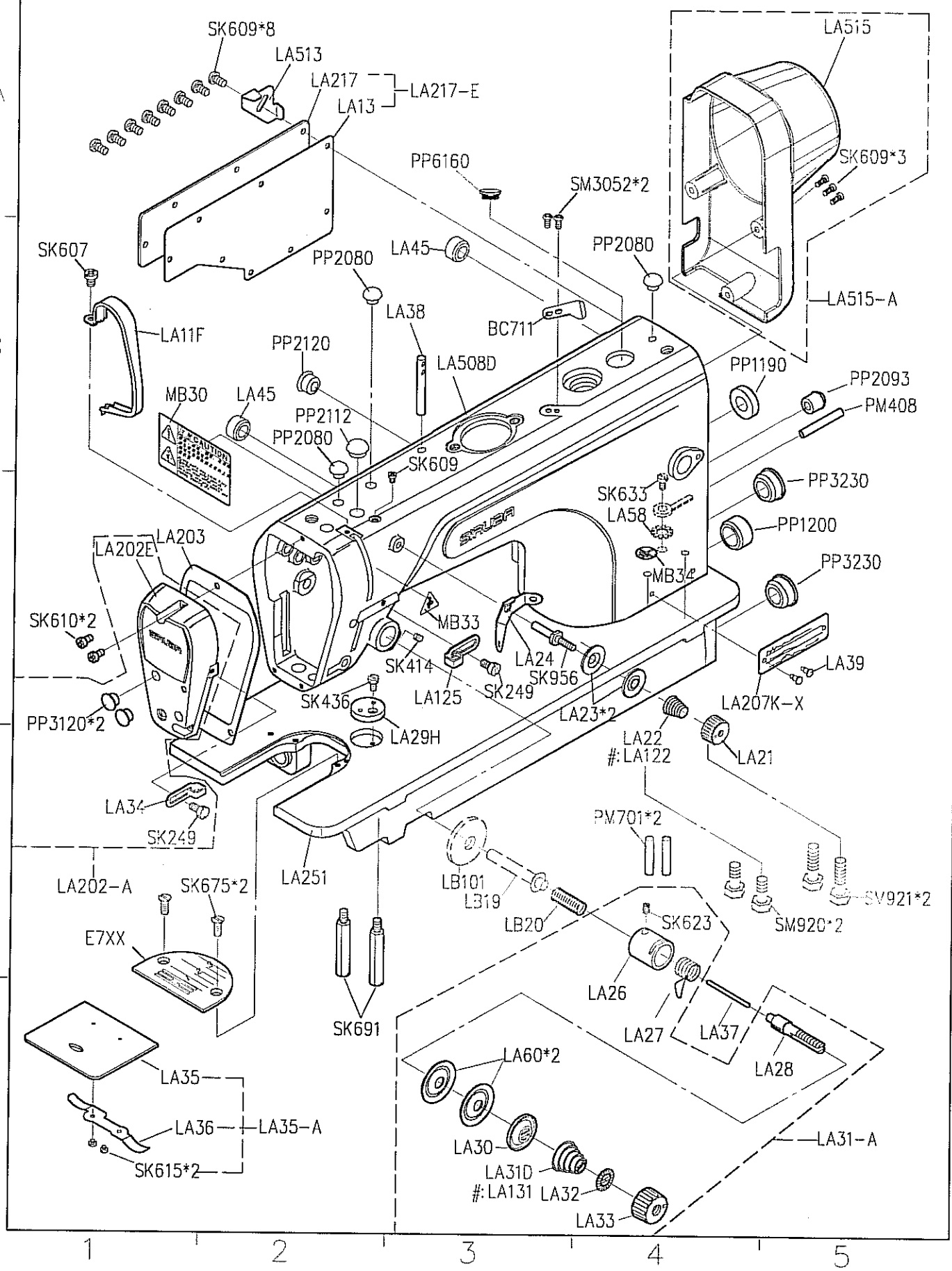

SIRUBA PARTS LIST	Series	Parts Group	Subclass / Remark	Page
	DL7000-BM1/BH1	LA		2/2
				Date
				2013/11/15

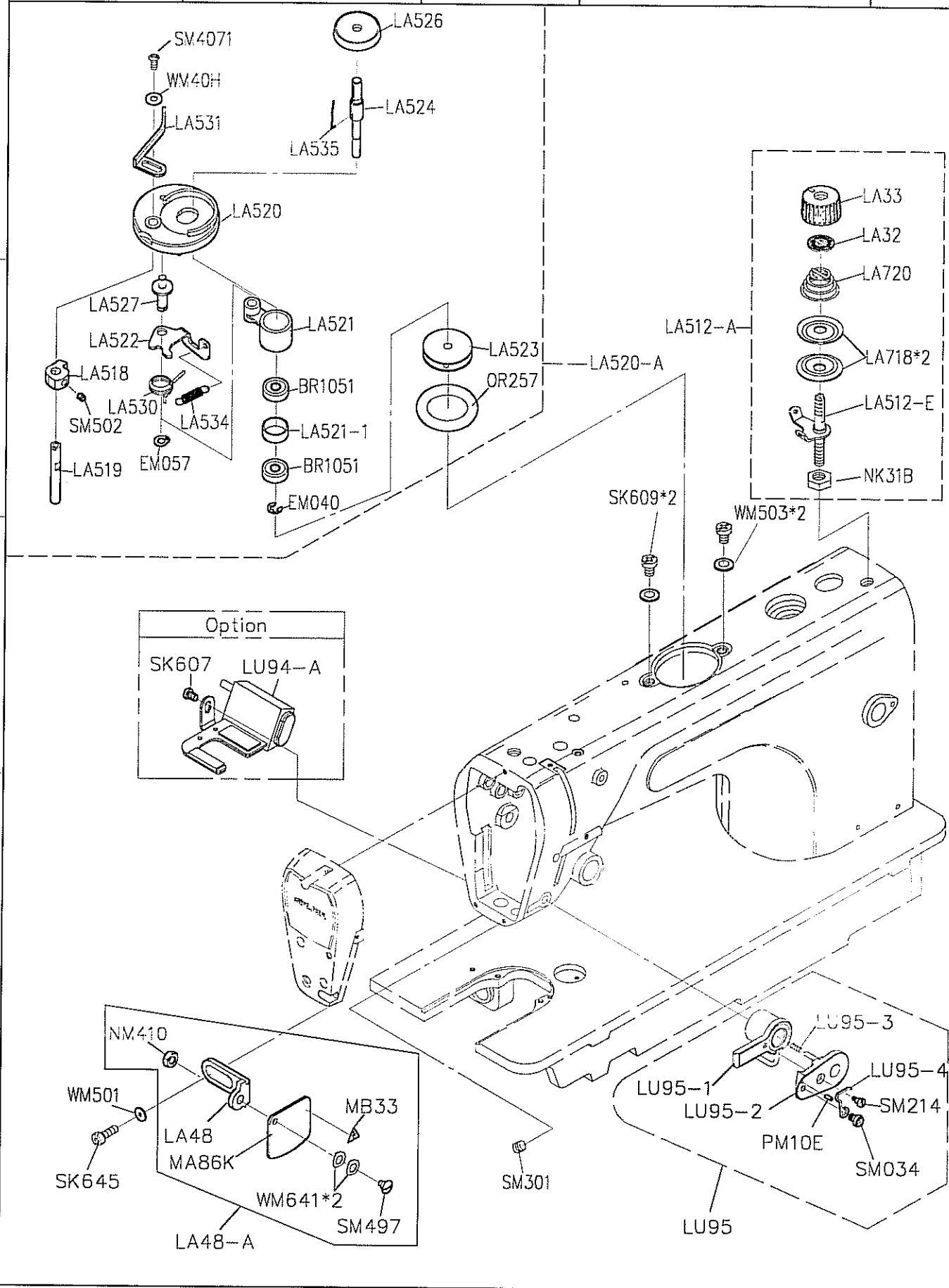

SIRUBA PARTS LIST	Series	Parts Group	Subclass / Remark	Page
	DL7000-BM1/BH1	LB	#:Use for BH1	1/1
				Date
				2013/01/01

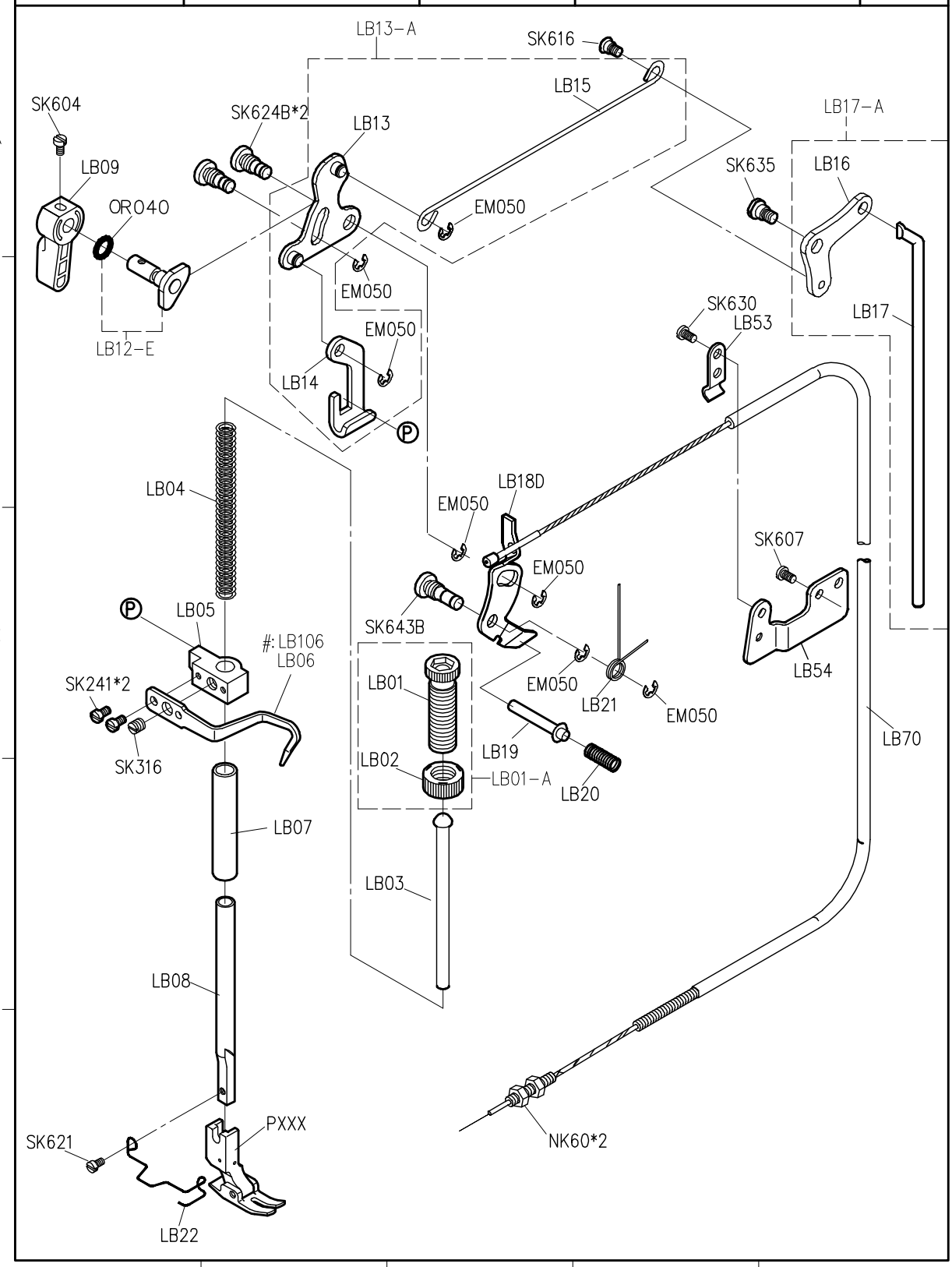

SIRUBA PARTS LIST	Series	Parts Group	Subclass / Remark	Page
	DL7000-BM1/BH1	LC	#:Use for BH1	1/2
				Date
				2013/09/13

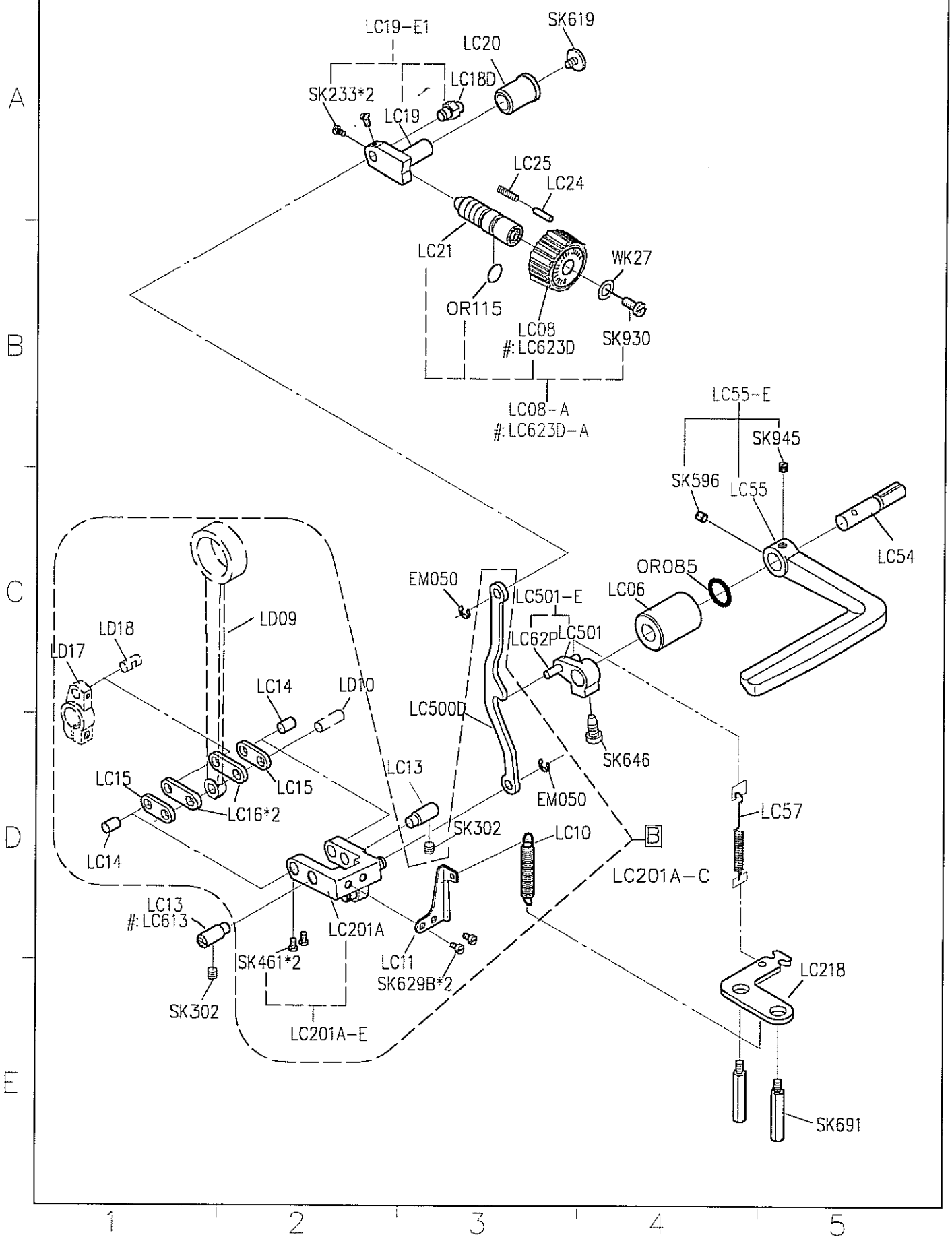

SIRUBA PARTS LIST	Series	Parts Group	Subclass / Remark	Page
	DL7000-BM1/BH1	LC		2/2
				Date
				2013/09/13

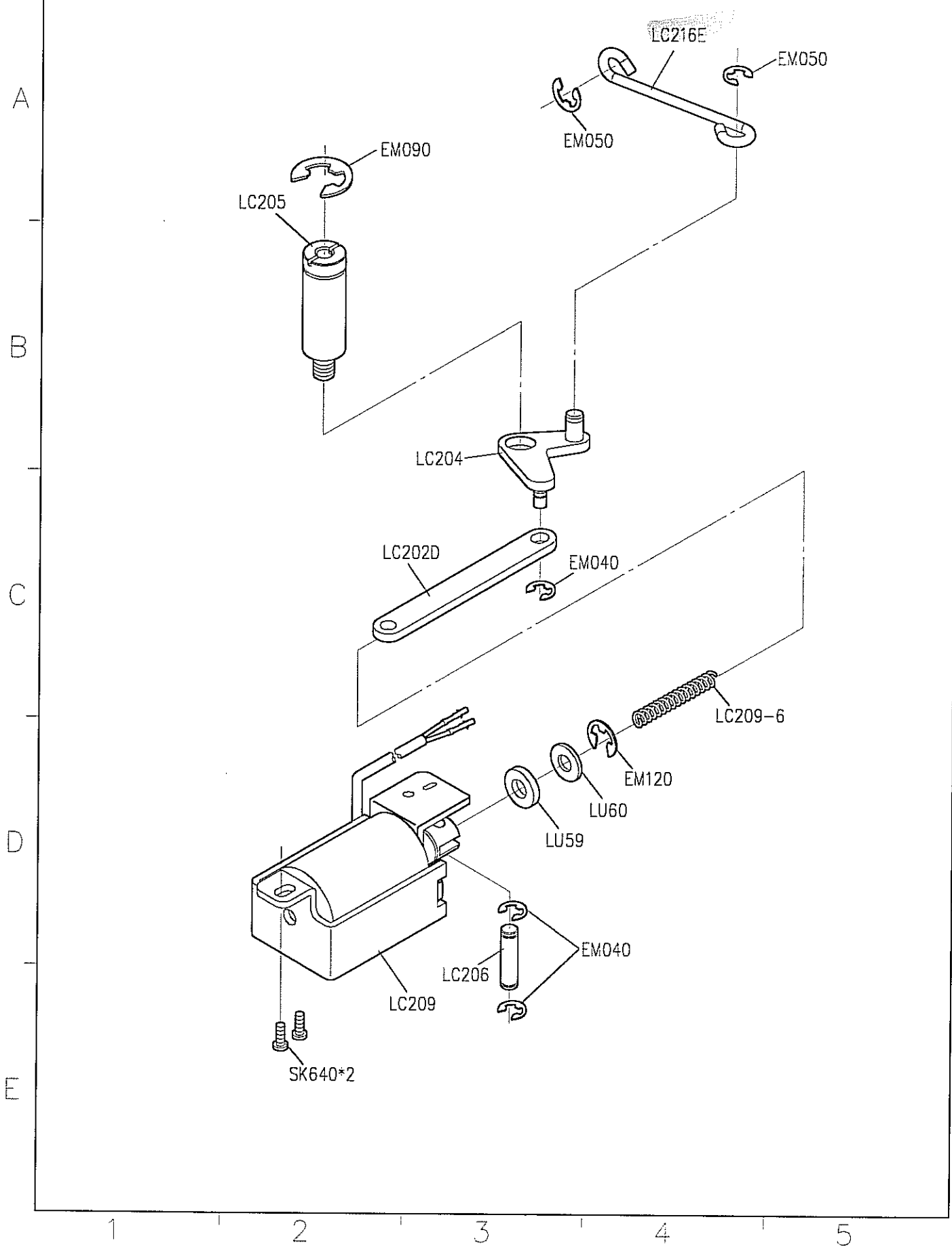

SiRUBA PARTS LIST	Series	Parts Group	Subclass / Remark	Page
	DL7000-BM1/BH1	LD		1/1
				Date
				2013/01/01

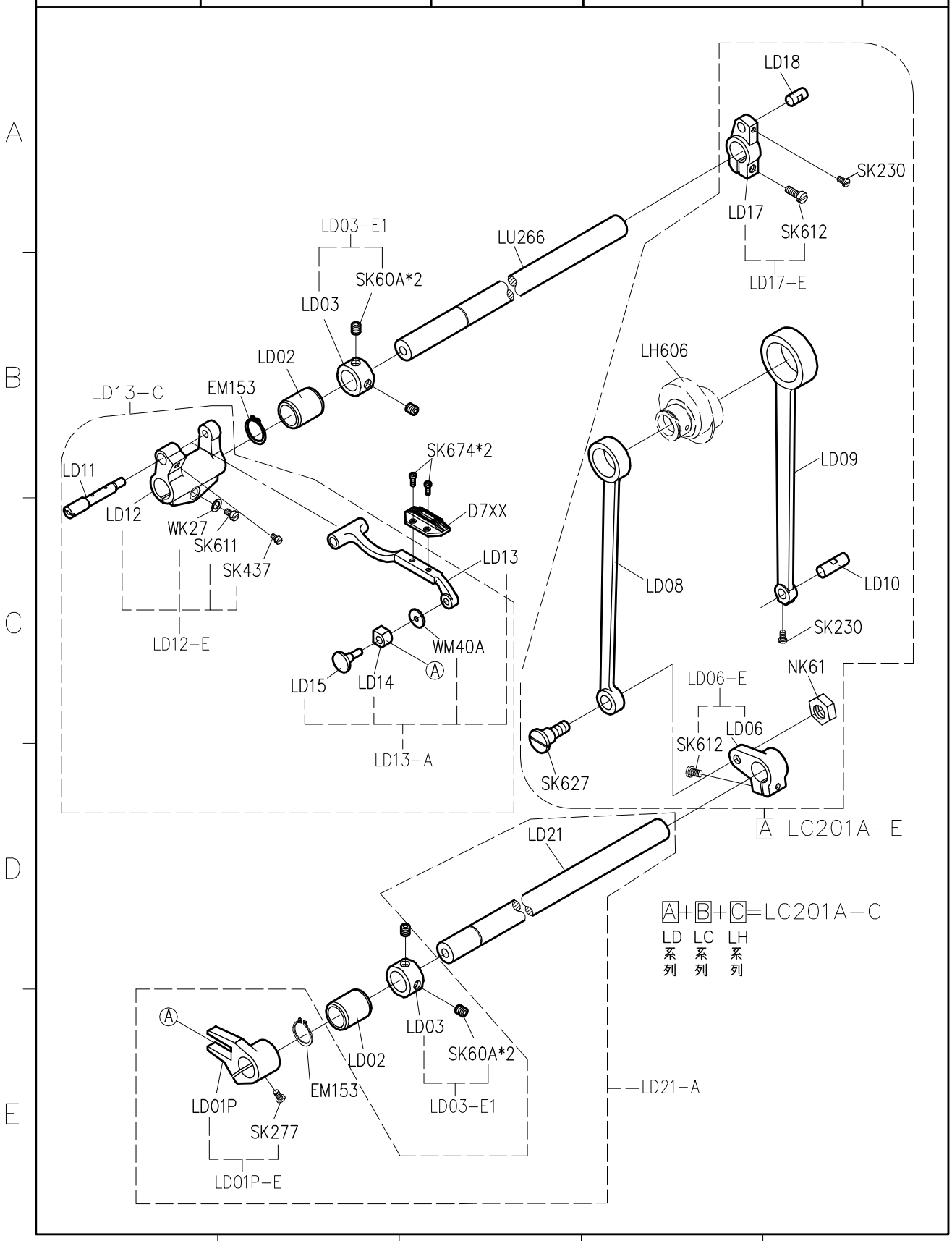

SiRUBA PARTS LIST	Series	Parts Group	Subclass / Remark	Page
	DL7000-BM1/BH1	LE		1/1
				Date
				2013/01/10

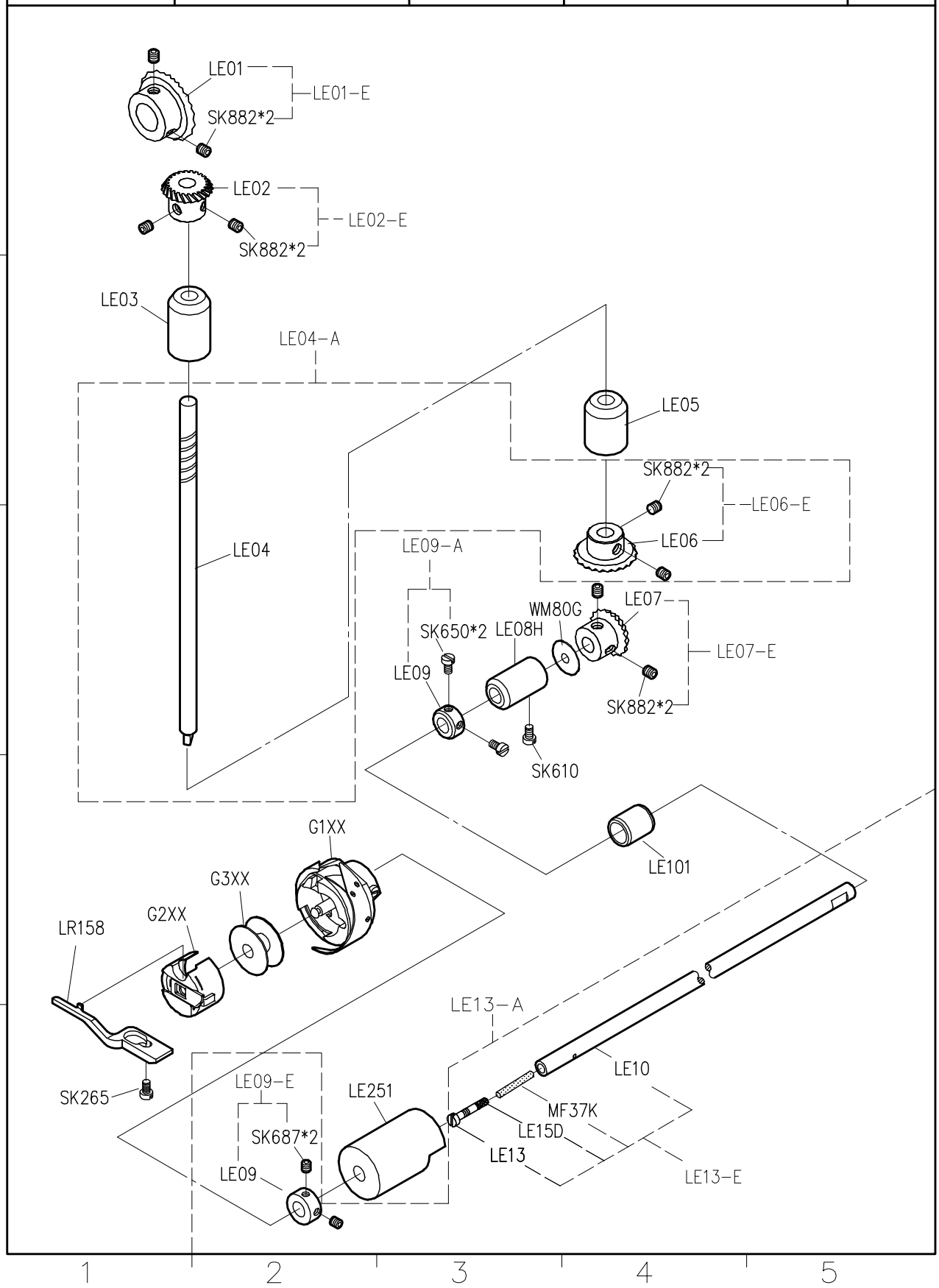

SiRUBA PARTS LIST	Series	Parts Group	Subclass / Remark	Page
	DL7000-BM1/BH1	LG	#:Use for BH1	1/1
				Date
				2013/01/01

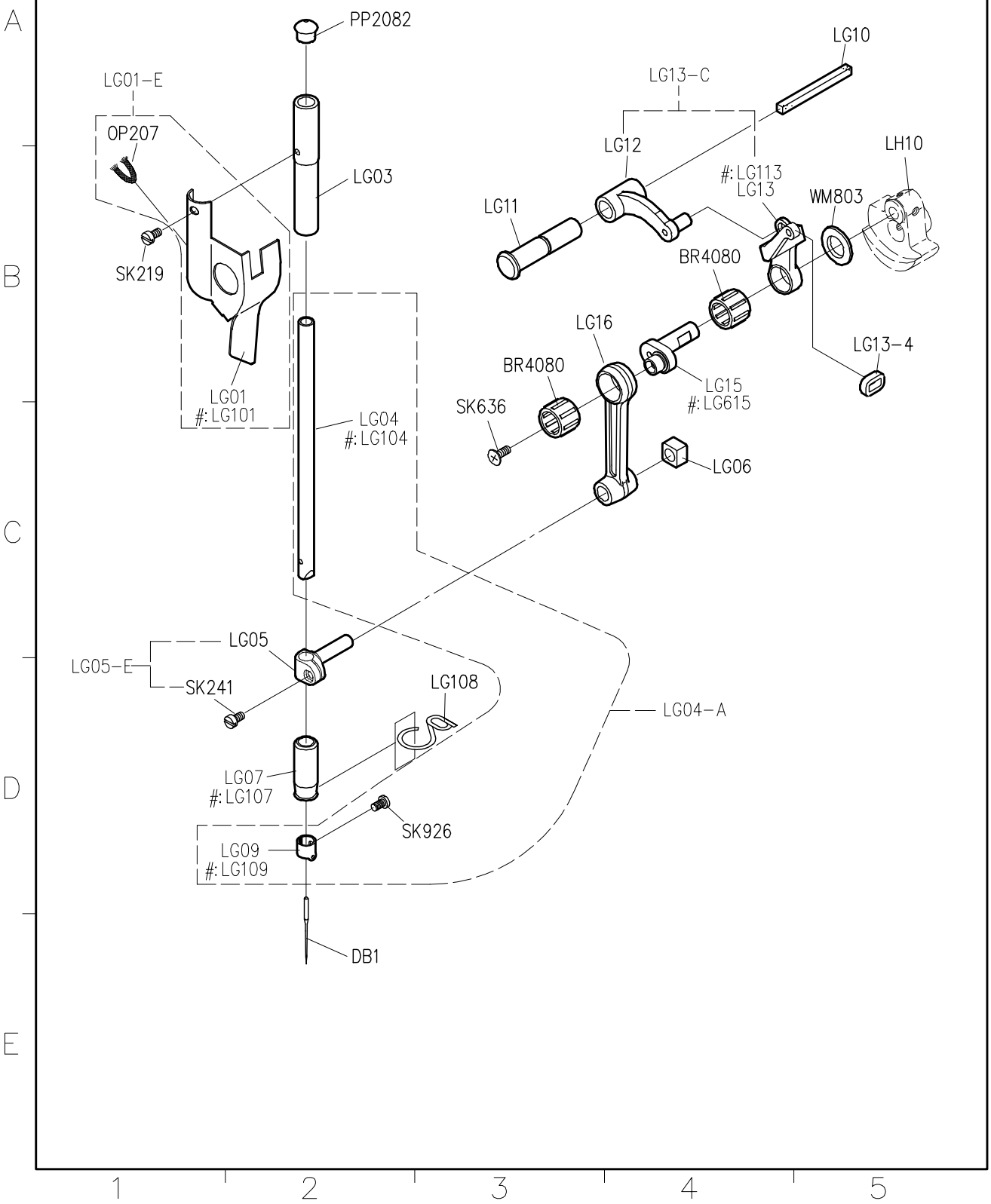

SiRUBA PARTS LIST	Series	Parts Group	Subclass / Remark	Page
	DL7000-BM1/BH1	LH		1/1
				Date
				2013/08/19

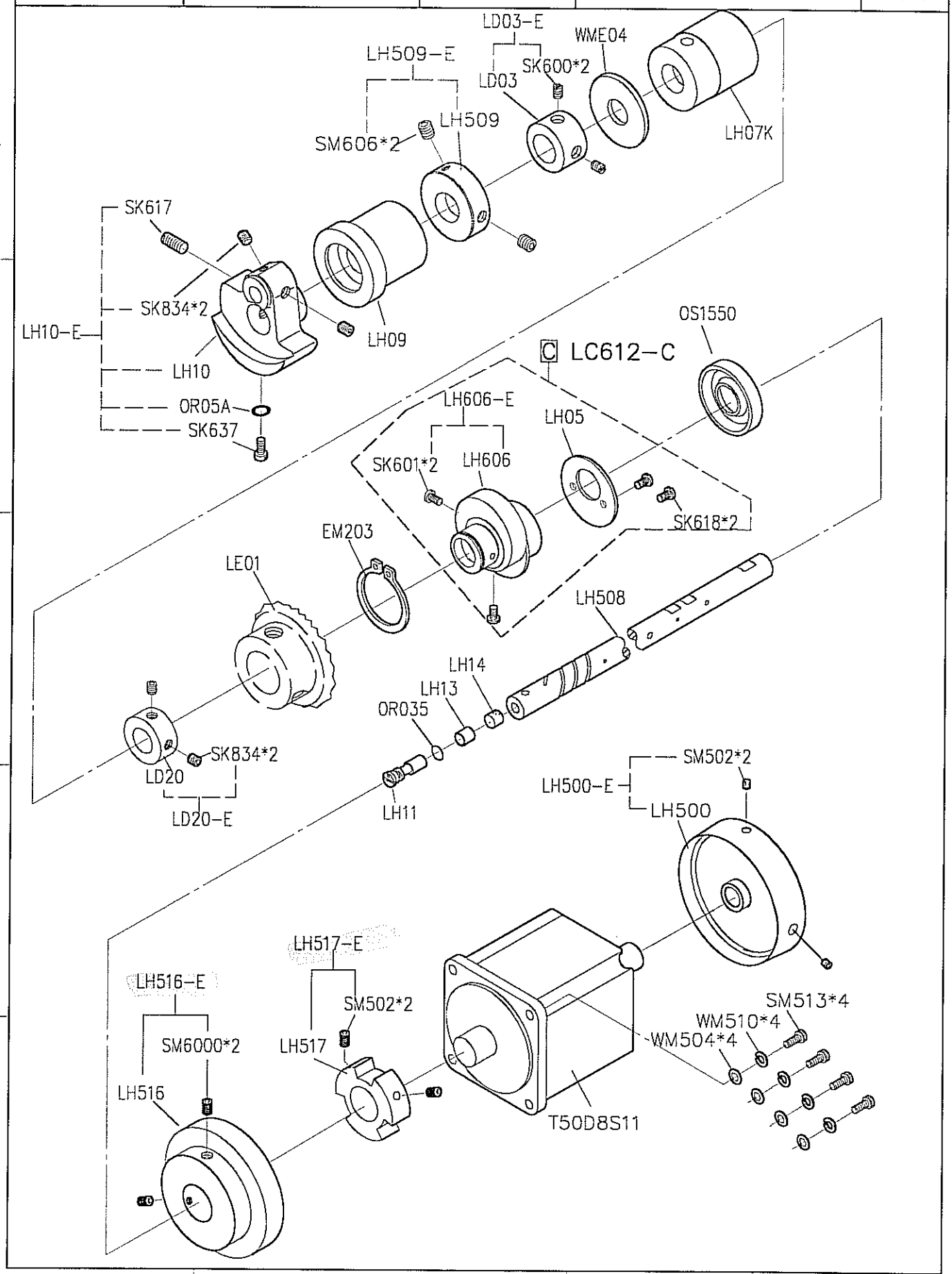

SiRUBA PARTS LIST	Series	Parts Group	Subclass / Remark	Page
	DL7000-BM1/BH1	LL		Date 2013/01/01

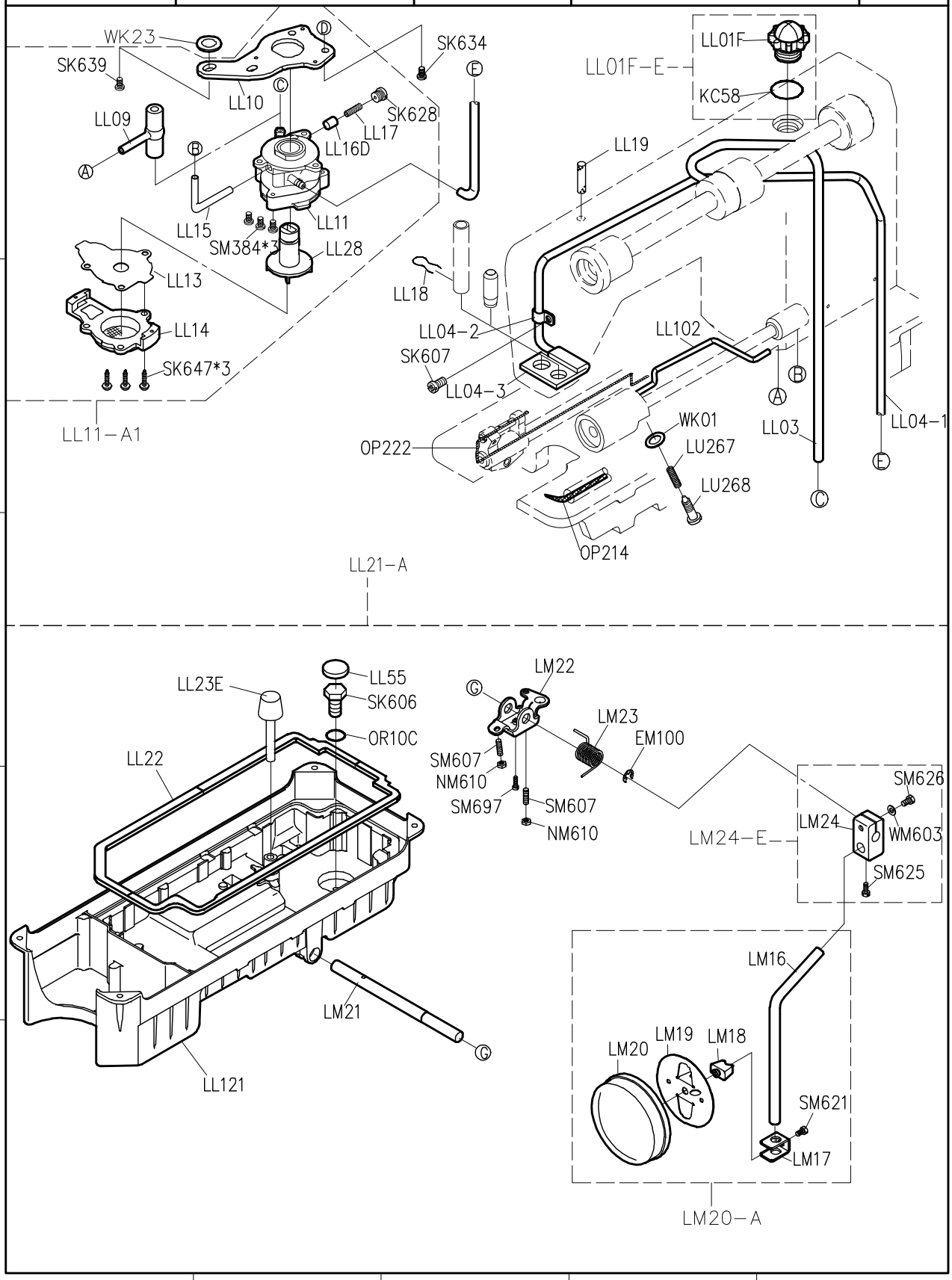

SIRUBA PARTS LIST	Series	Parts Group	Subclass / Remark	Page
	DL7000-BM1/BH1	LU		1/5
				Date
				2013/01/01

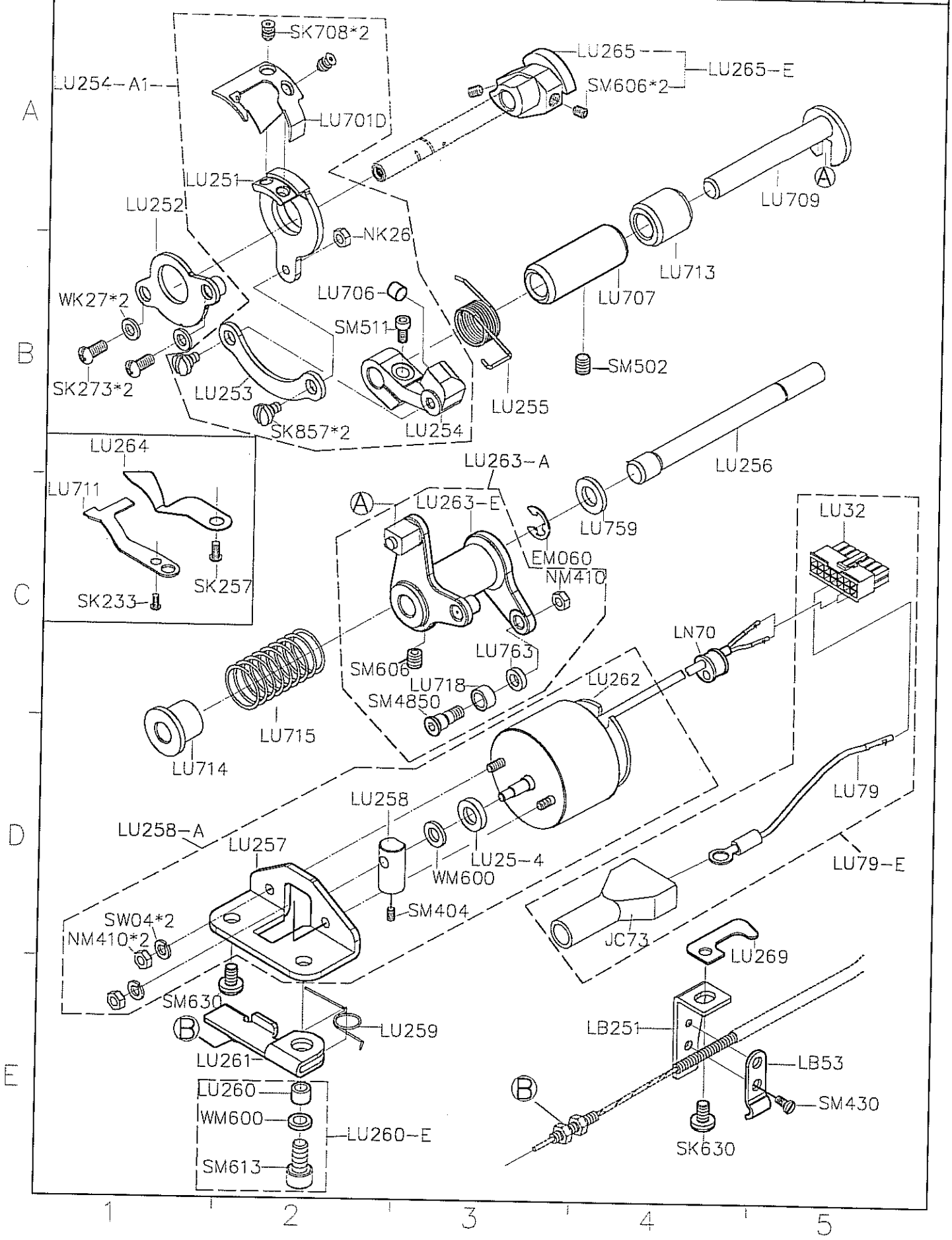

SIRUBA PARTS LIST	Series	Parts Group	Subclass / Remark	Page
	DL7000-BM1/BH1	LU		2/5
				Date
				2012/12/01

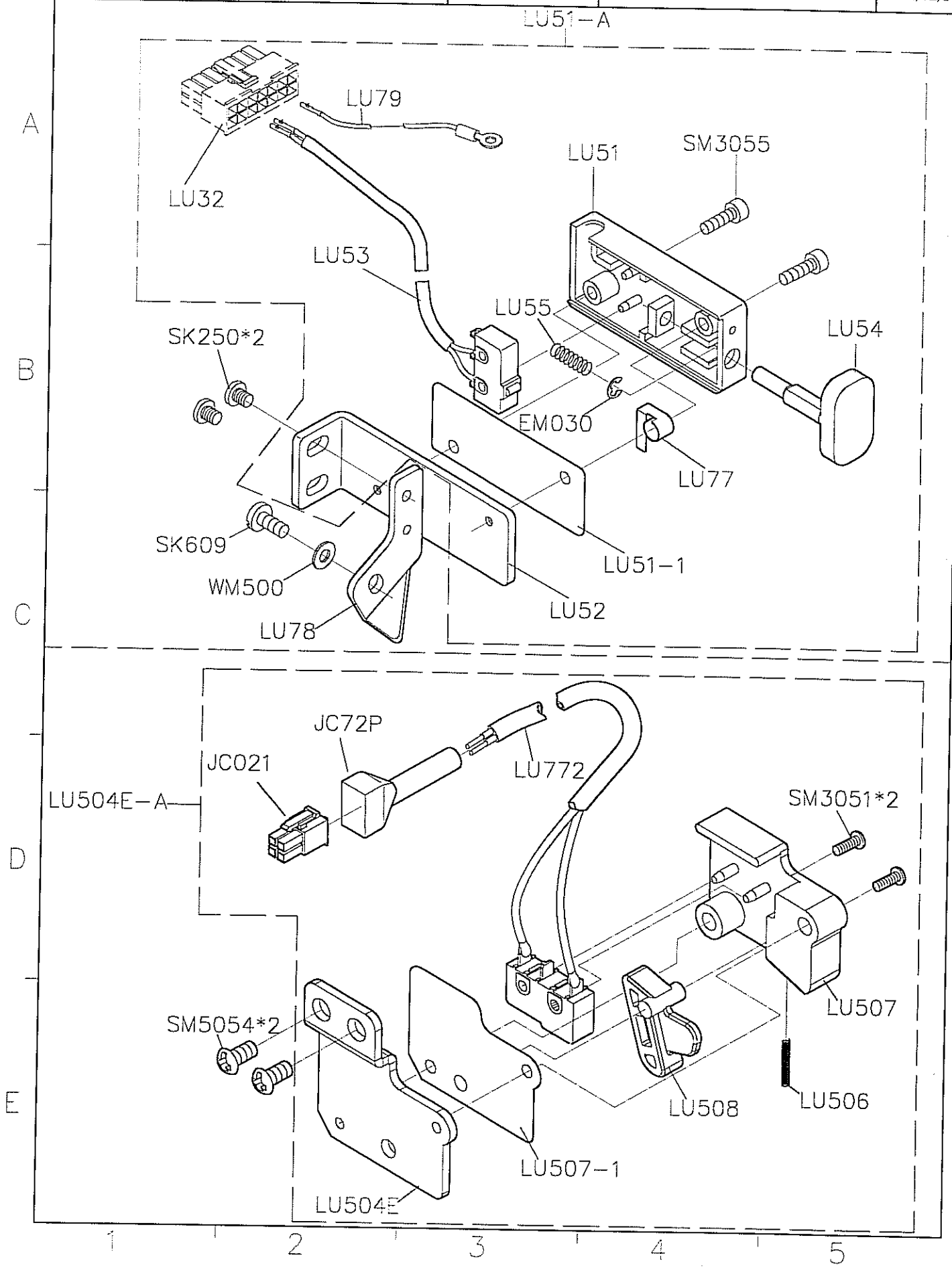

SiRUBA PARTS LIST	Series	Parts Group	Subclass / Remark	Page
	DL7000-BM1/BH1	LU	#:Use for BH1	3/5
				Date
				2013/01/01

#: LU64D-A1
LU64F-A1

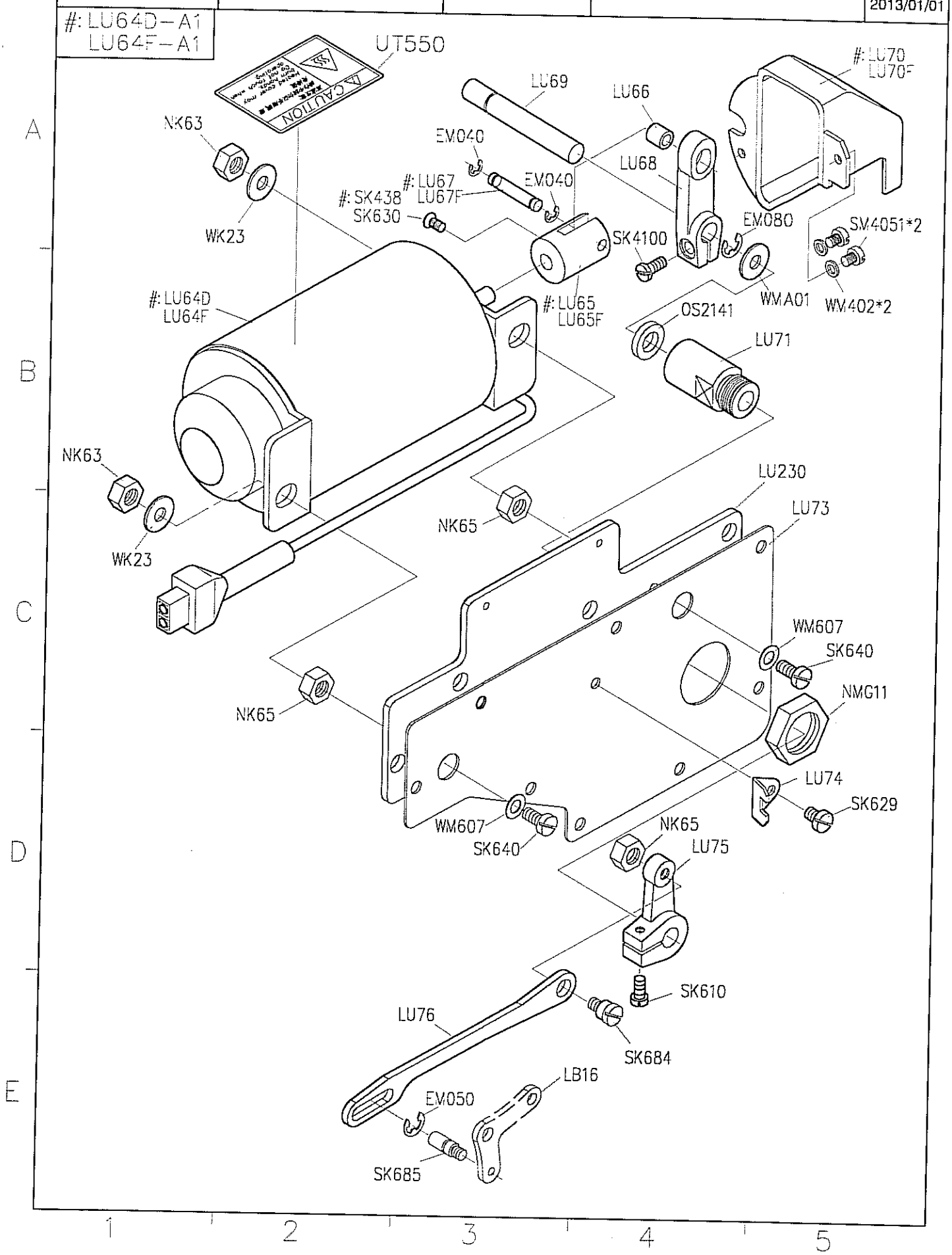

SIRUBA PARTS LIST	Series	Parts Group	Subclass / Remark	Page
	DL7000-BM1/BH1	LU		4/5
				Date
				2013/09/13

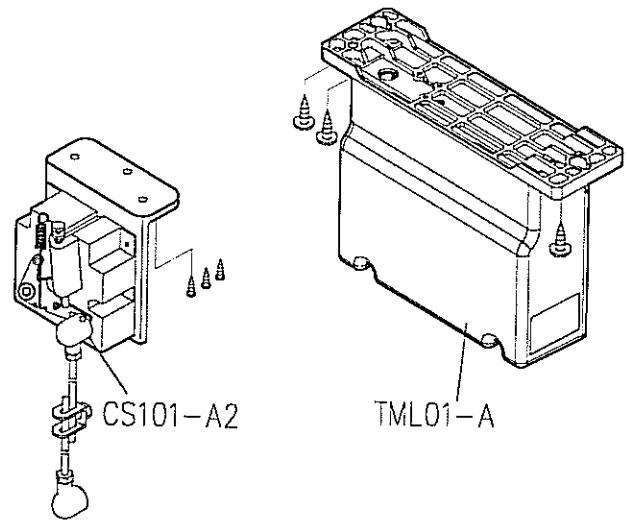

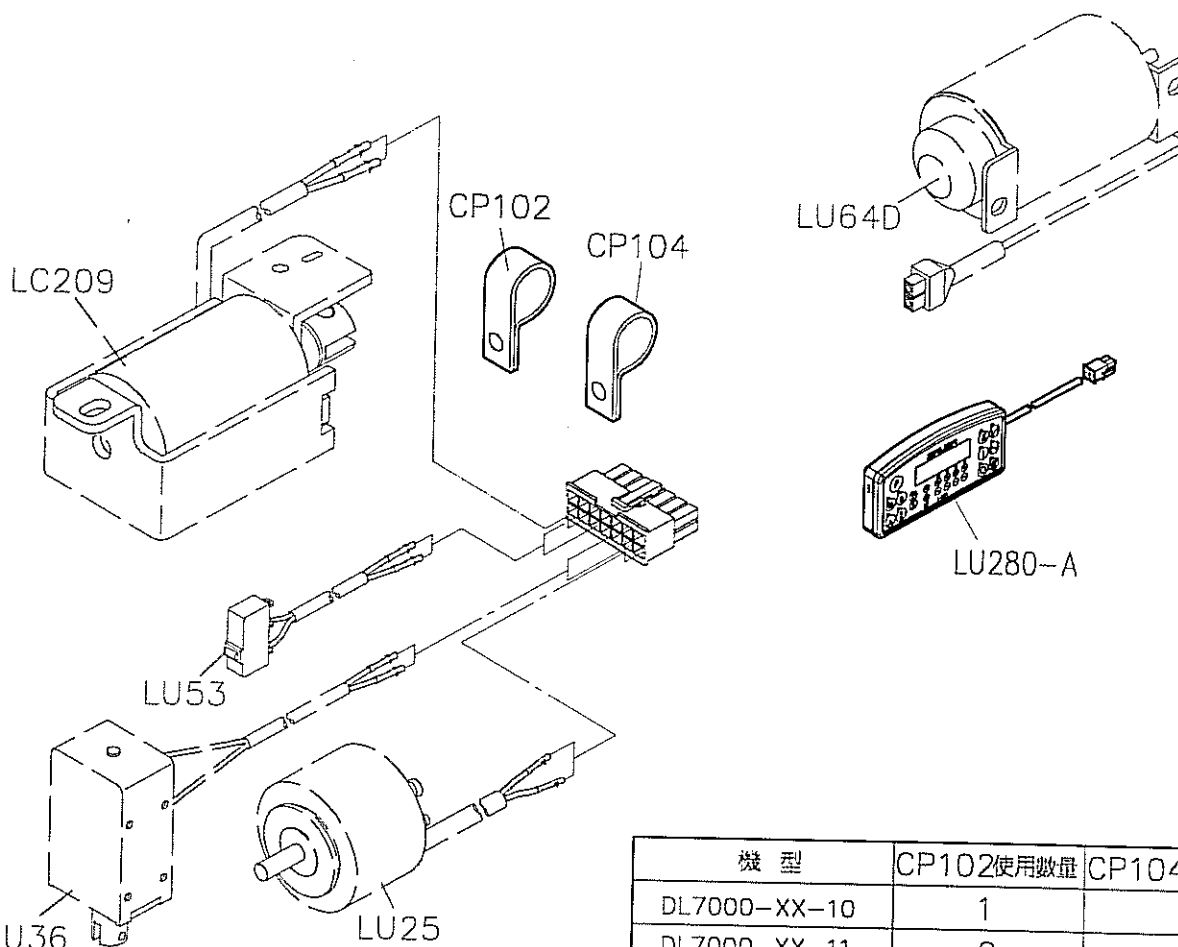

機 型	CP102使用数量	CP104使用数量
DL7000-XX-10	1	1
DL7000-XX-11	0	2
DL7000-XX-12	1	1
DL7000-XX-13	0	2

SIRUBA PARTS LIST	Series	Parts Group	Subclass / Remark	Page
	DL7000-BM1/BH1	LU		5/5
				Date
				2012/12/01

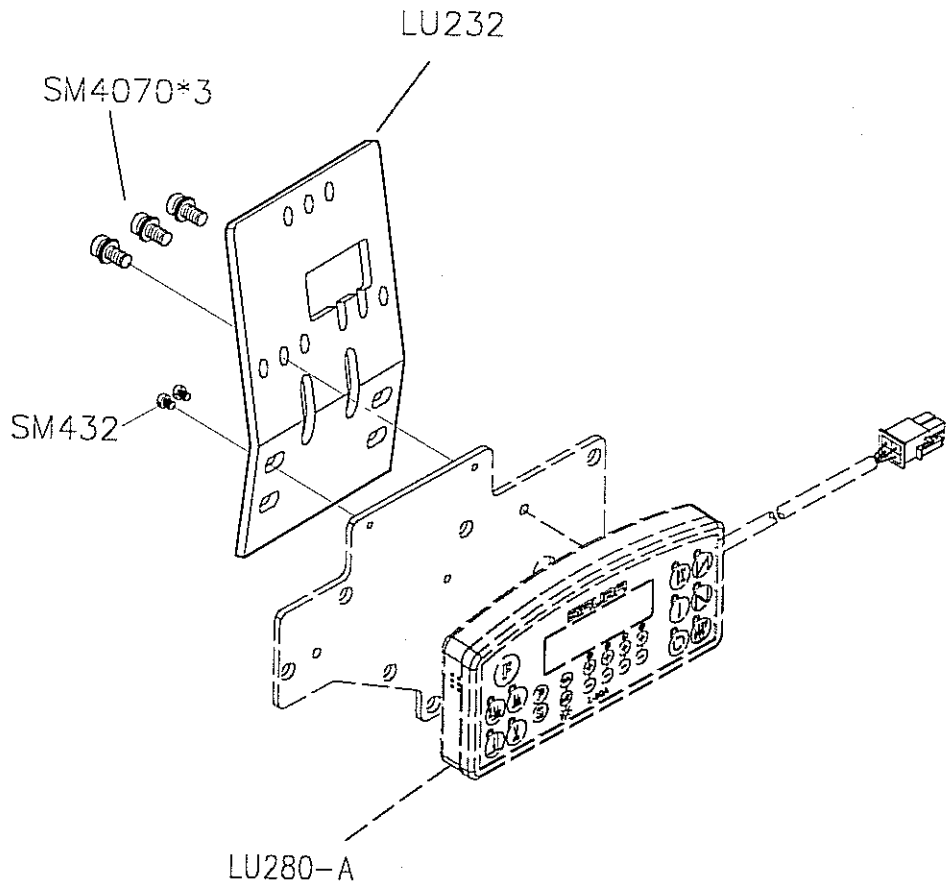

代碼 NO.	操作面板 Control Panel	代碼 NO.	自動切線 Auto THREAD Trimmer	快速倒縫 Reverse Feeding	撥線桿 Wiper	自動抬押具 Auto Lifer
1	LU280-A	0	V	V	—	—
		1	V	V	V	—
		2	V	V	—	V
		3	V	V	V	V

SIRUBA PARTS LIST	Series	Parts Group	Subclass / Remark	Page
	DL7000-BM1/BH1	LW		1/1
				Date
				2012/04/10

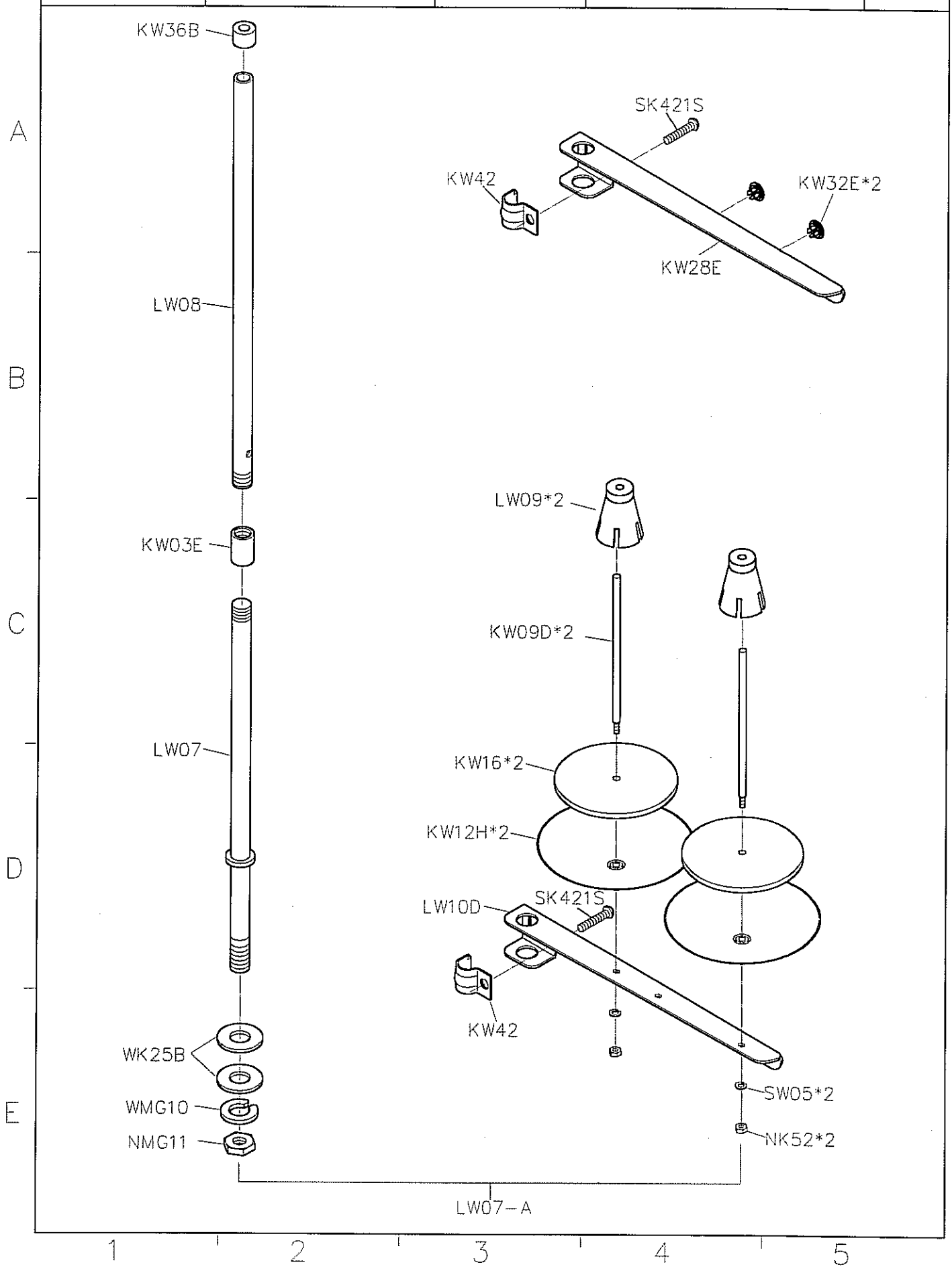

SiRUBA PARTS LIST	Series	Parts Group	Subclass / Remark	Page
	DL7000-BM1/BH1	LY		1/1
				Date
				2013/01/09

LY01

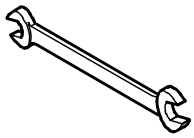

LY02

YM04*2

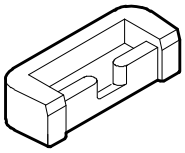

LY05*2

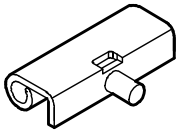

YM102*2

MY09

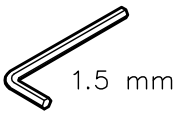

LY502K

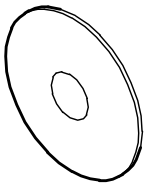

KY201

LY37−A

YM103*2

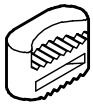

針*2

LY38

MY12

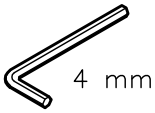

G3XX

LY33

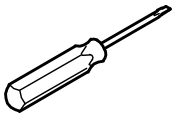

LY34

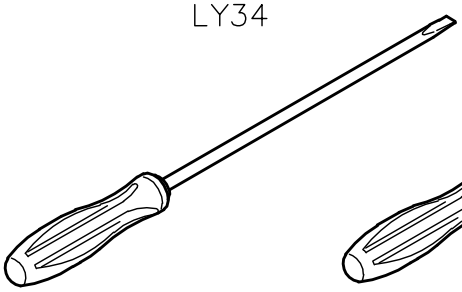

LY35

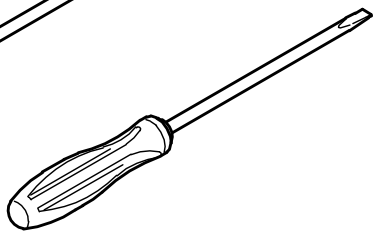

KZ03*1

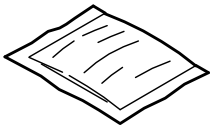

SiRUBA PARTS LIST	Series	Parts Group	Subclass / Remark	Page
	DL7000-BM1/BH1	LZ		1/1
				Date
				2013/01/01

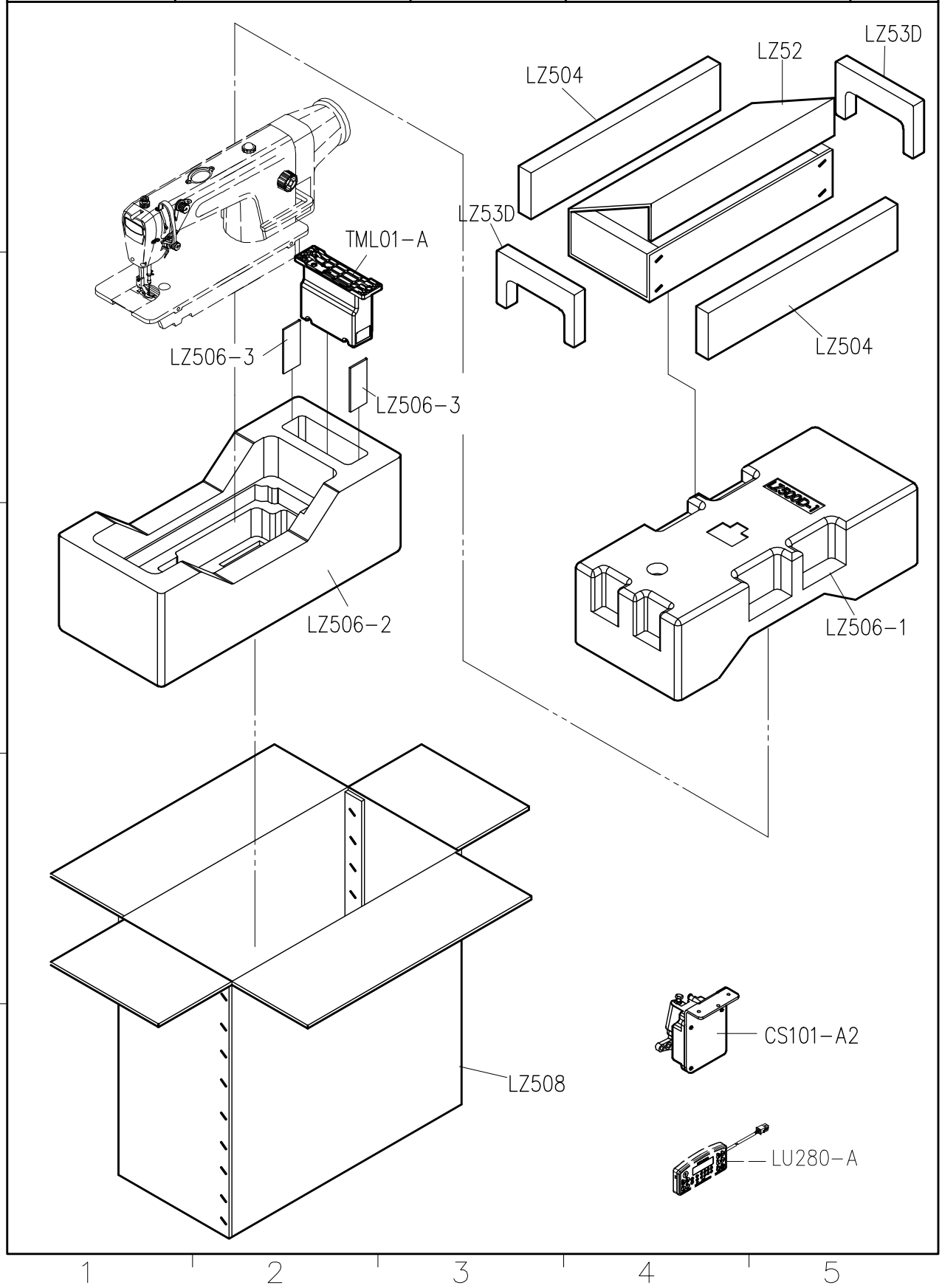

SIRUBA	Series	Item Code	Subclass / Remark	Mounting
TABLE CUT - OUT	DL7000	DL7000T-T1		Fully-submerged
				Date
				2013/03/10
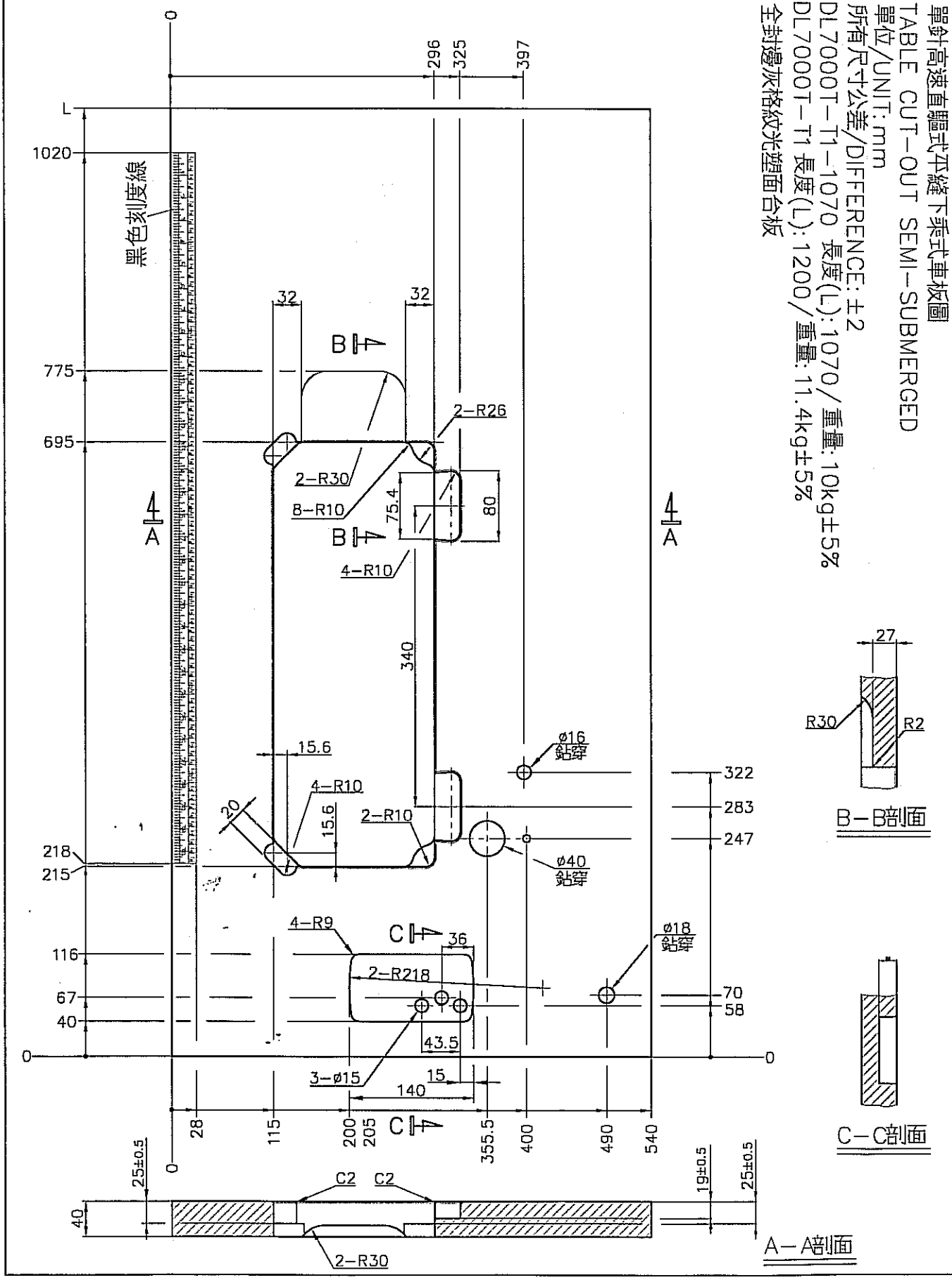
單針高速直驅式平縫下乘式車板圖
TABLE CUT-OUT SEMI-SUBMERGED
單位/UNIT: mm
所有尺寸公差/DIFFERENCE: ±2
DL7000T-T1-1070 長度(L): 1070/重量: 10kg±5%
DL7000T-T1 長度(L): 1200/重量: 11.4kg±5%
全封邊灰格紋光塑面台板