C007,17 3 agulhas

eletrônico

c/cortador

Simba

CYLINDER BED INTERLOCK MACHINE

18PGS.

輔助件零件圖

ATTACHMENT PARTS LIS

-LOJA

PARTS LIST FOR CC GROUP

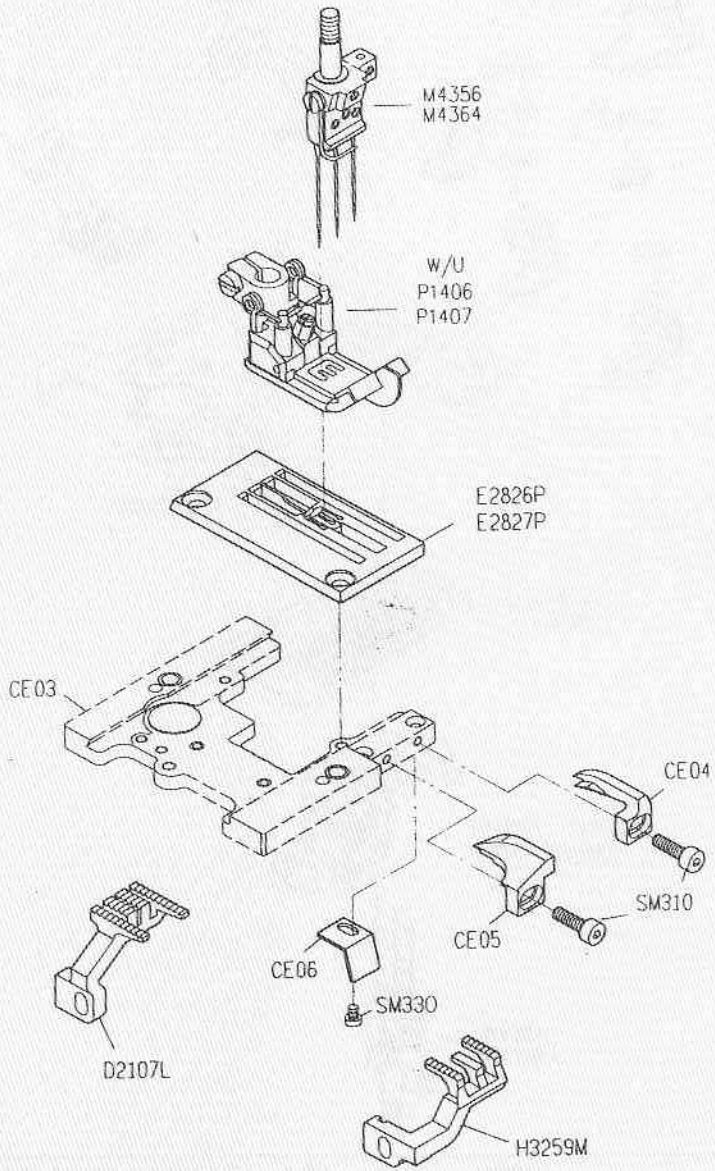

PARTS LIST FOR CD GROUP

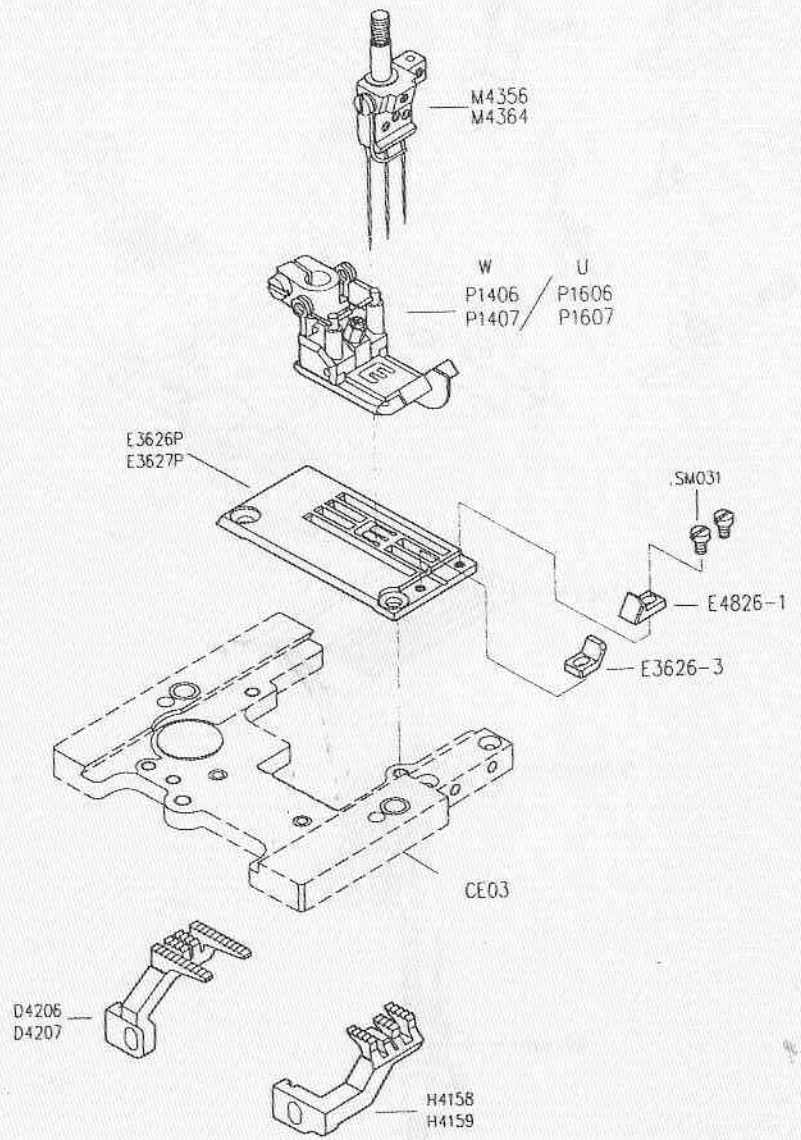

PARTS LIST FOR CE GROUP

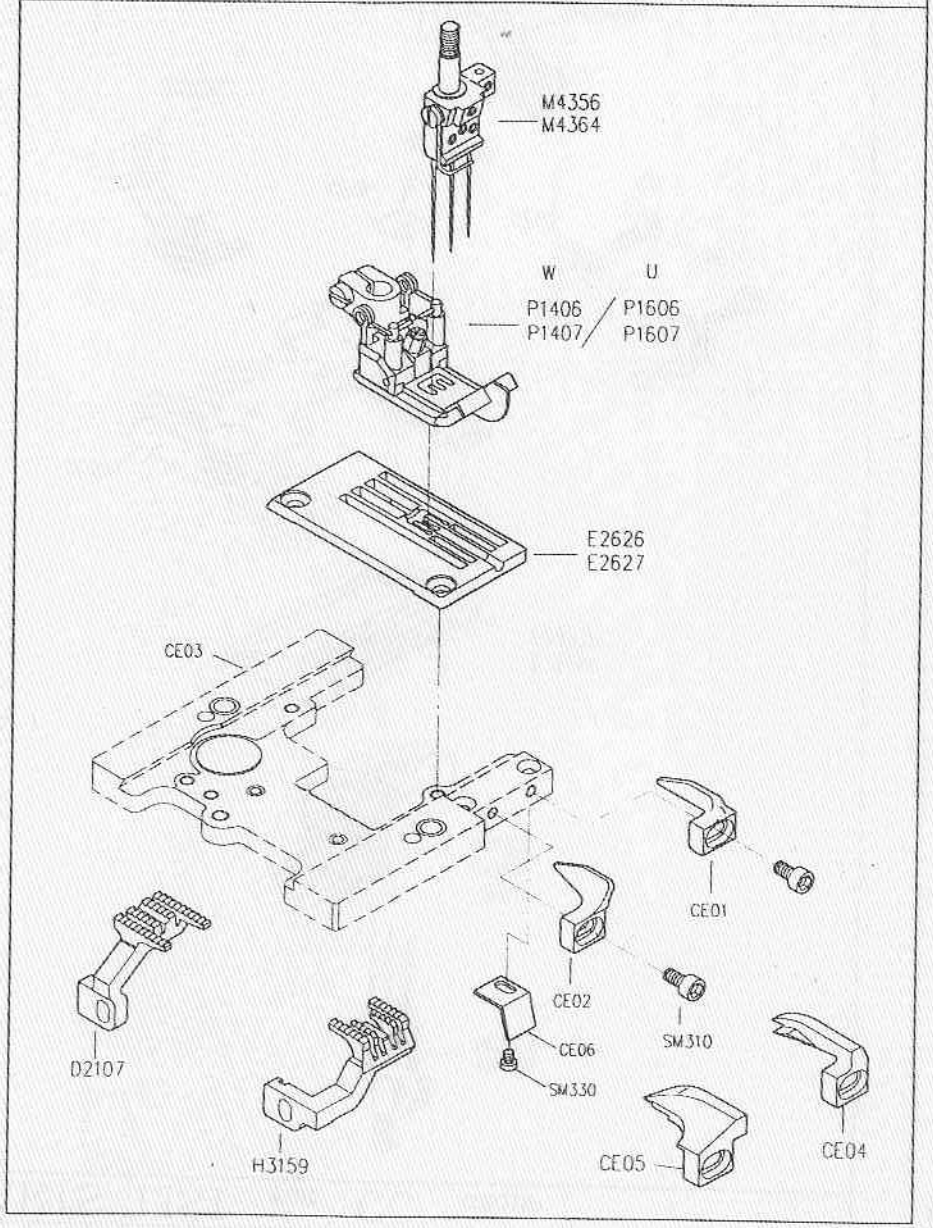

PARTS LIST FOR CF GROUP

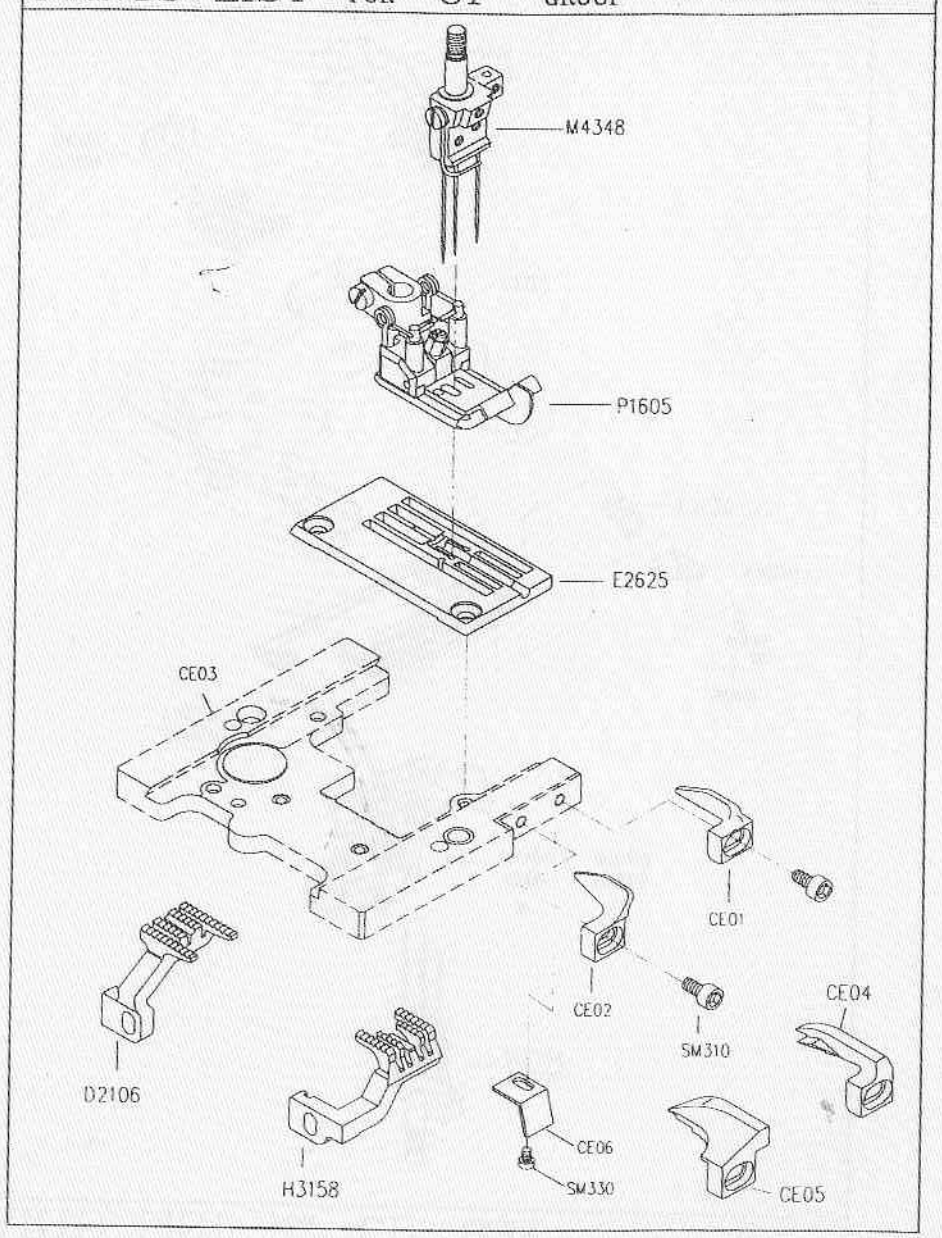

PARTS LIST FOR CFC(1) GROUP 1/2

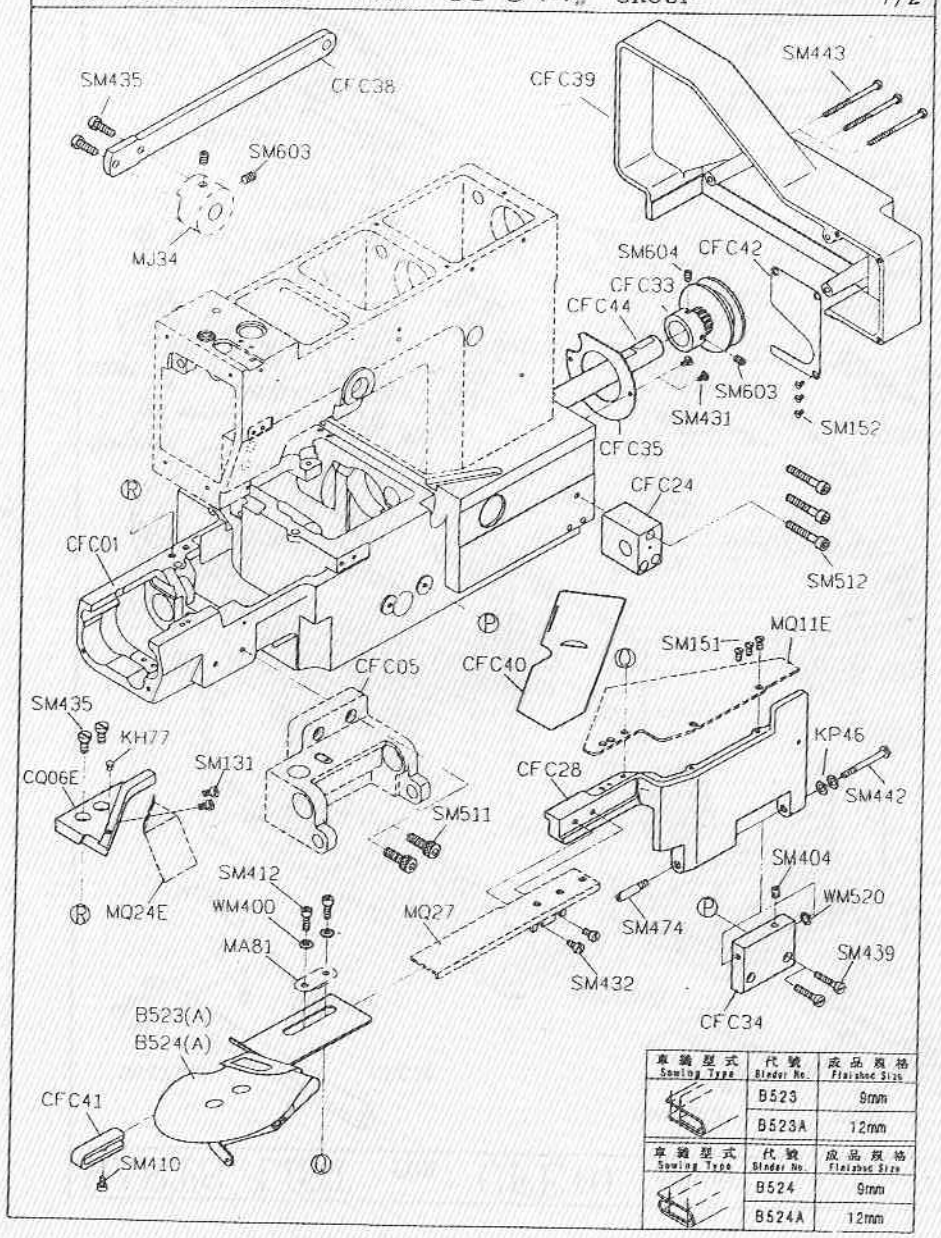

車縫型式 Sewing Type	代號 Binder No.	成品規格 Finished Size
	B523	9mm
	B523A	12mm
車縫型式 Sewing Type	代號 Binder No.	成品規格 Finished Size
	B524	9mm
	B524A	12mm

PARTS LIST FOR CFC(2) GROUP 2/2

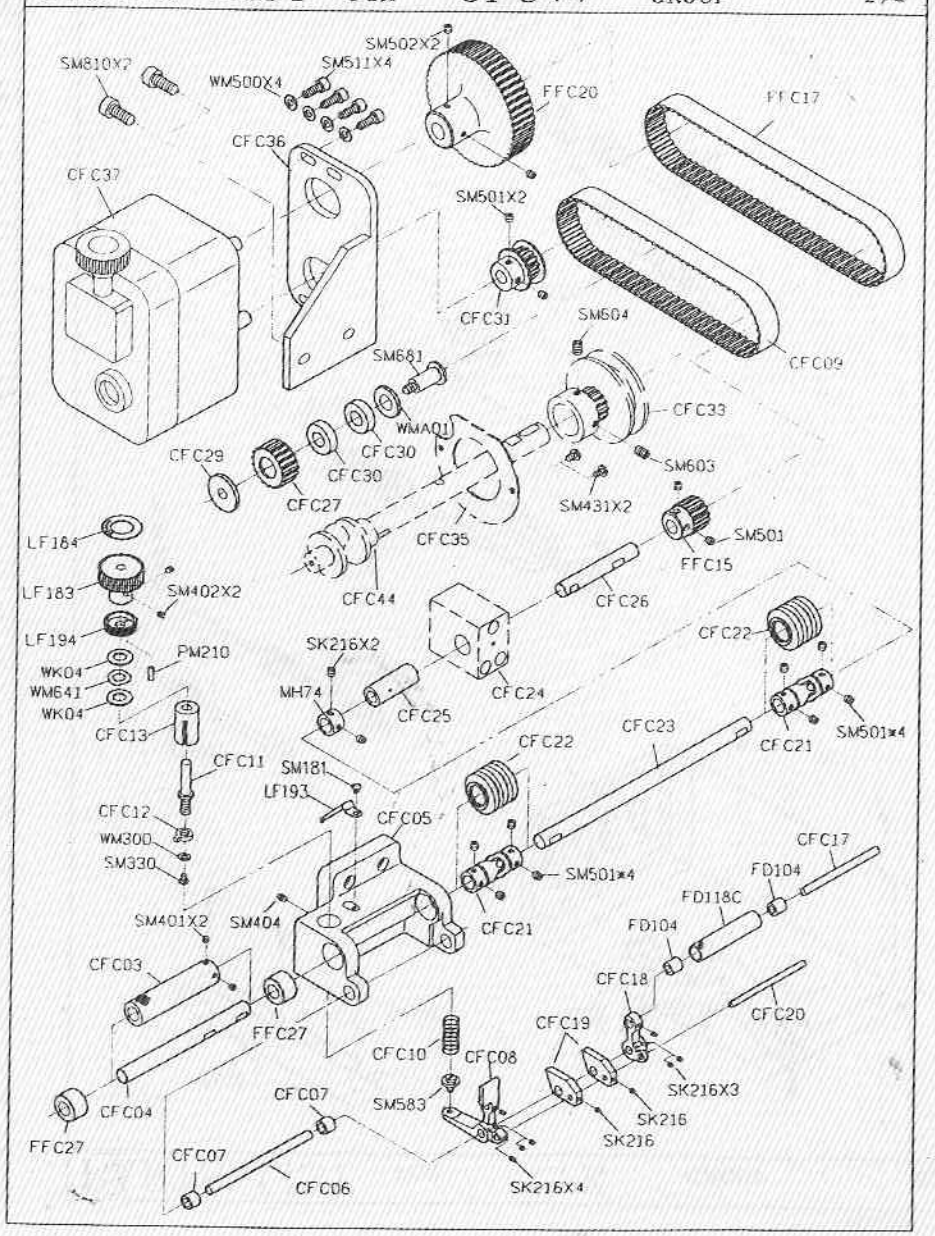

PARTS LIST FOR CFE(1) GROUP 1/3

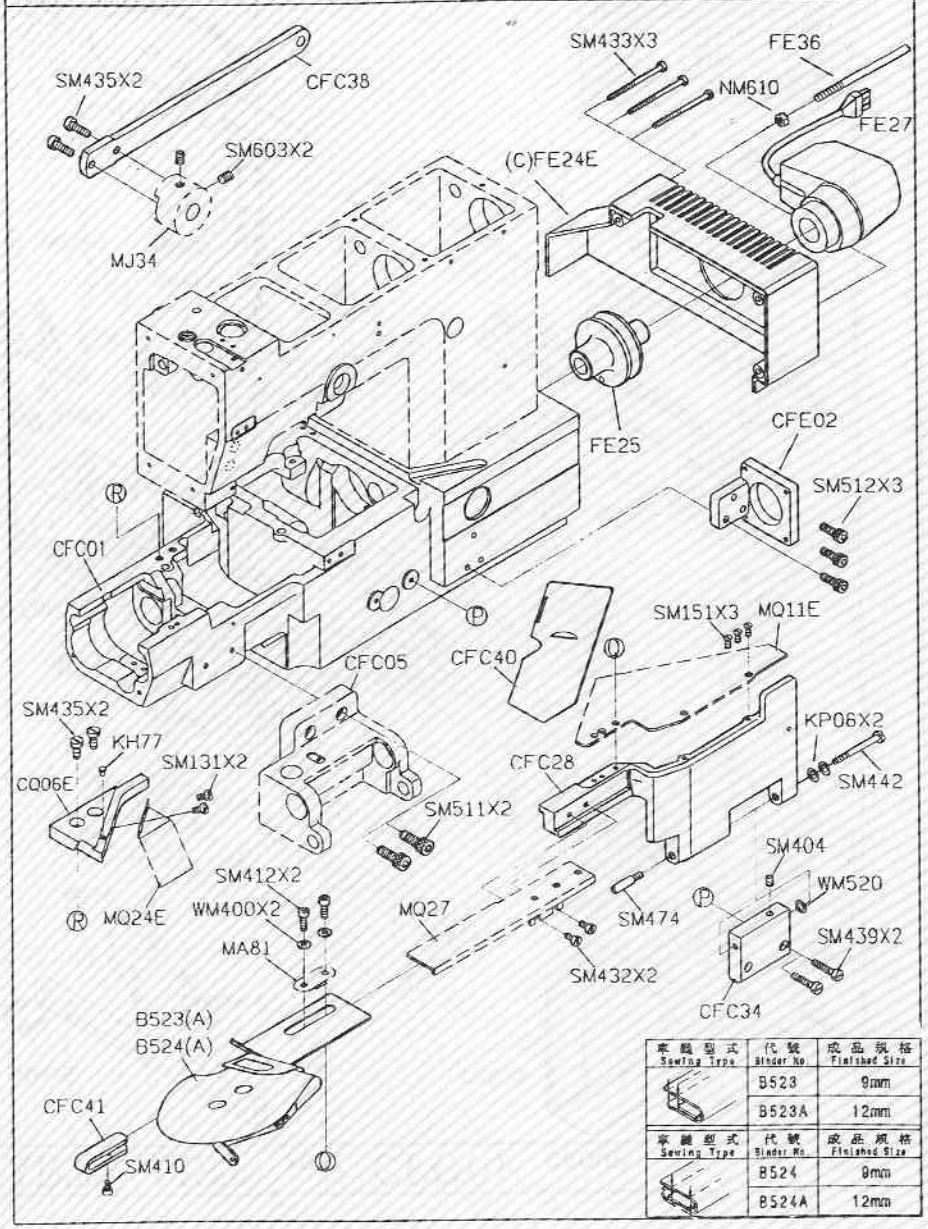

車縫型式 Sewing Type	代號 Binder No.	成品規格 Finished Size
	B523	9mm
	B523A	12mm

車縫型式 Sewing Type	代號 Binder No.	成品規格 Finished Size
	B524	9mm
	B524A	12mm

PARTS LIST FOR CFE GROUP 2/3

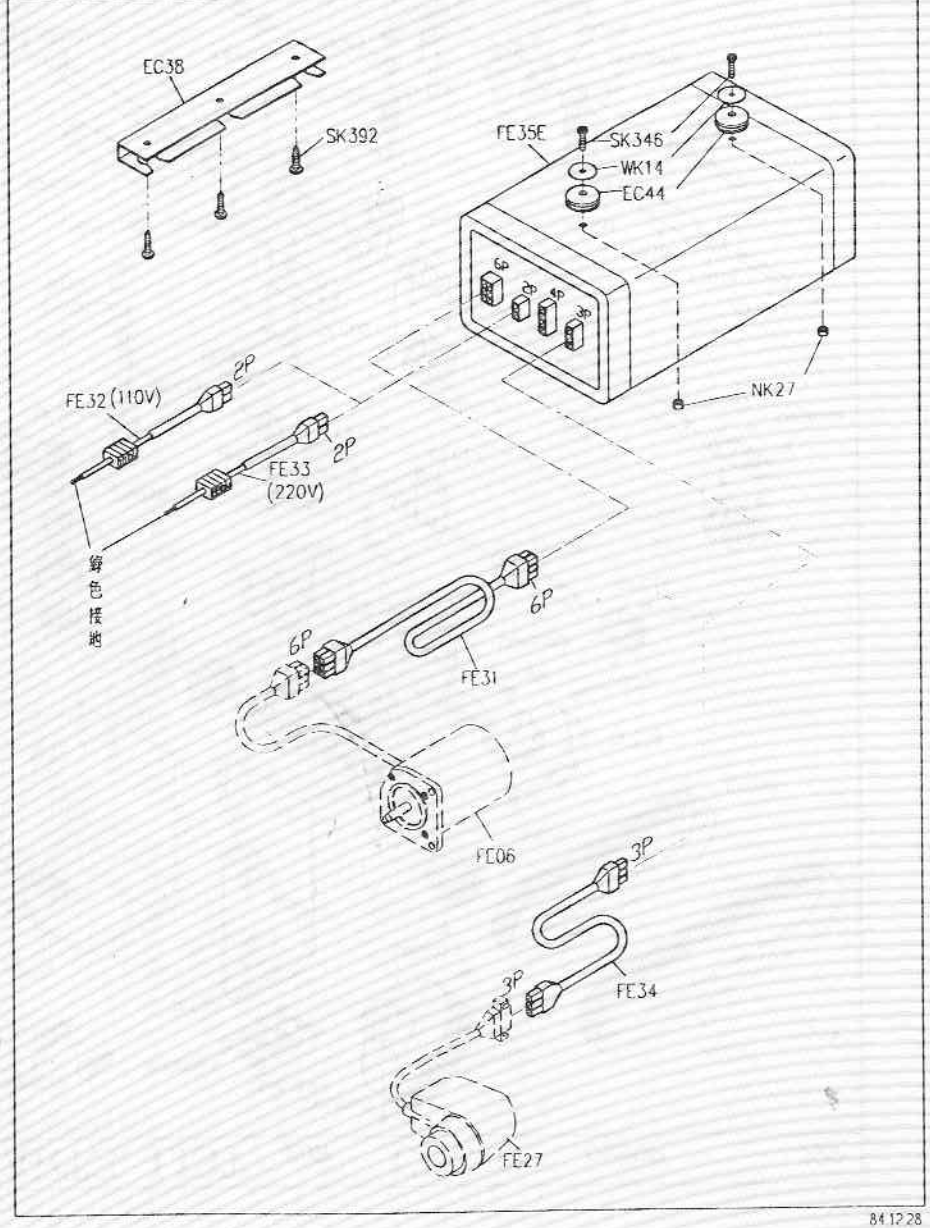

PARTS LIST FOR CFE(3) GROUP 3/3

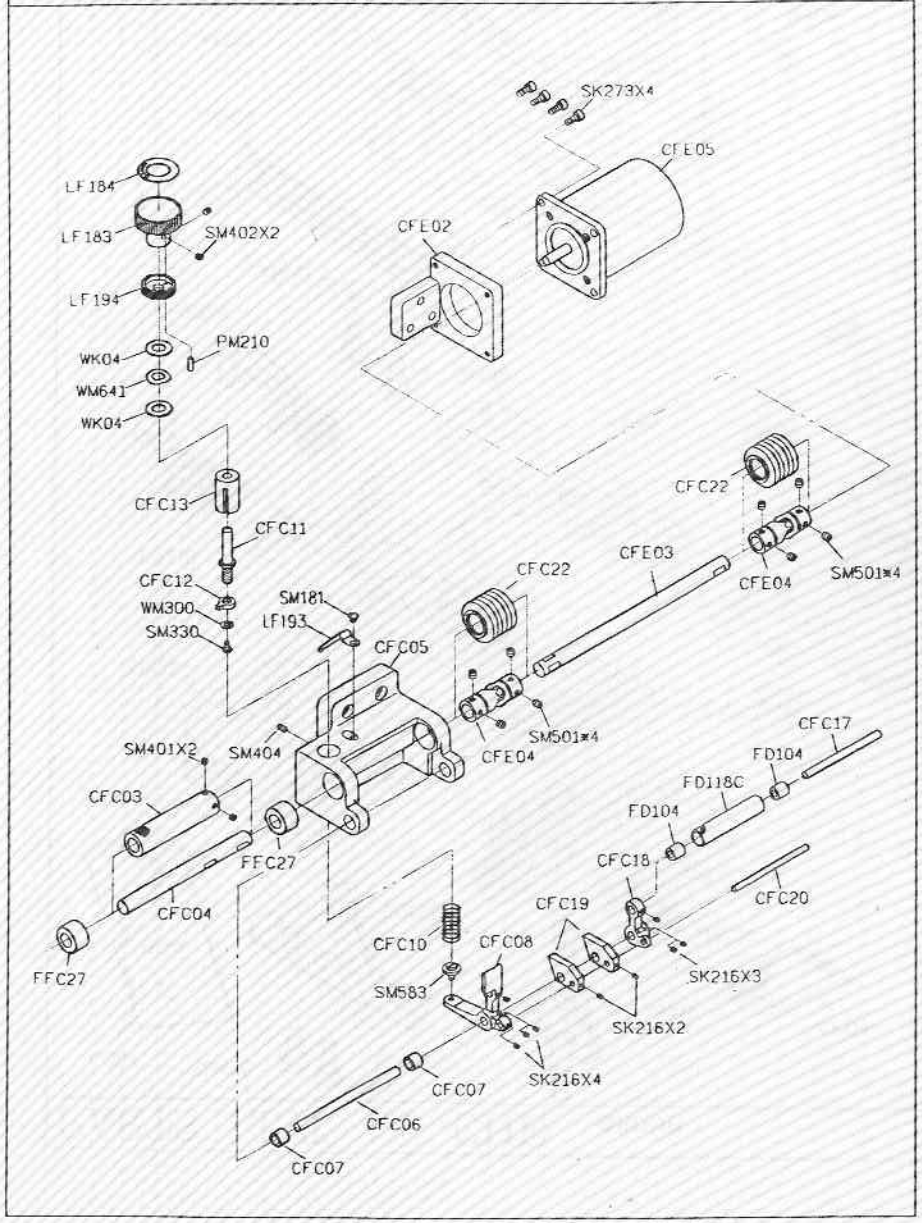

PARTS LIST FOR CH GROUP

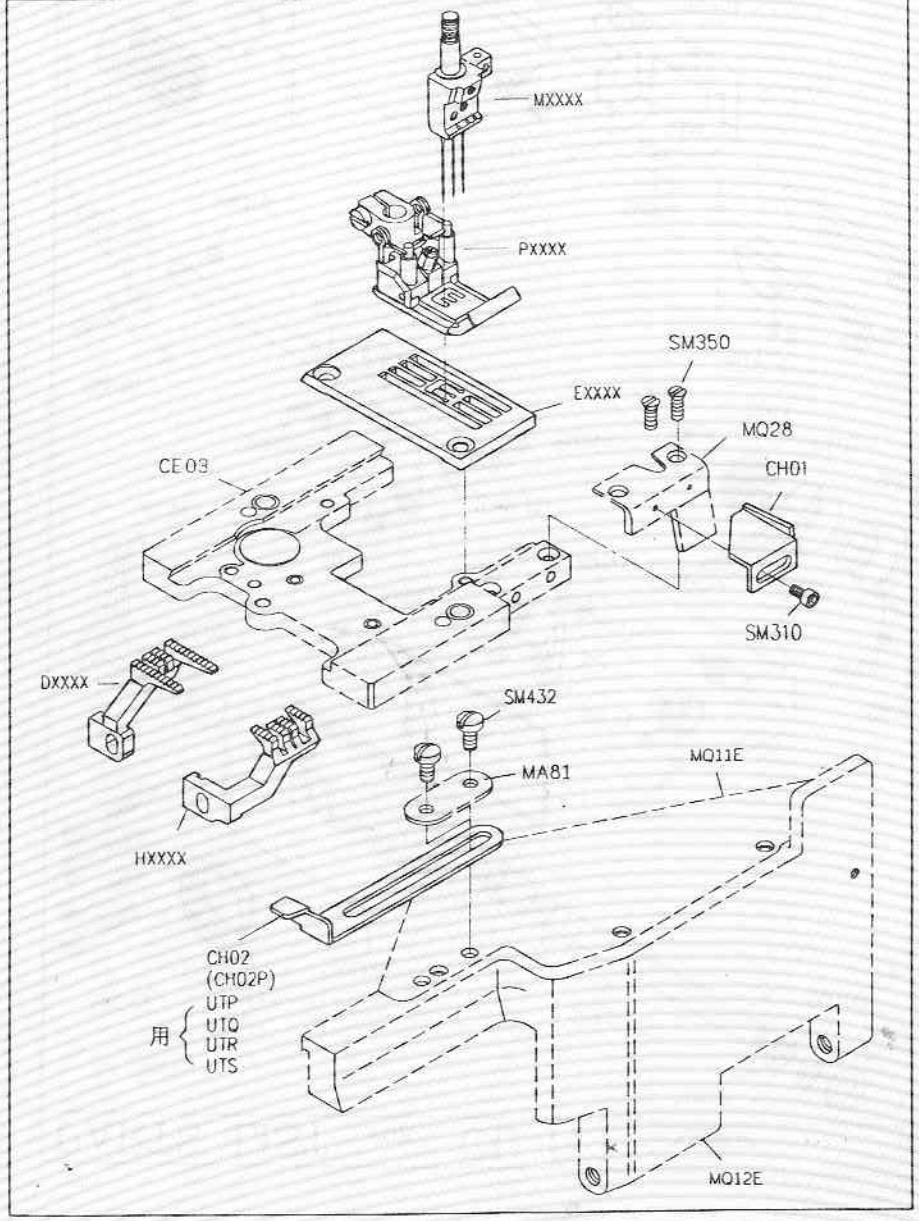

PARTS LIST FOR CHE GROUP

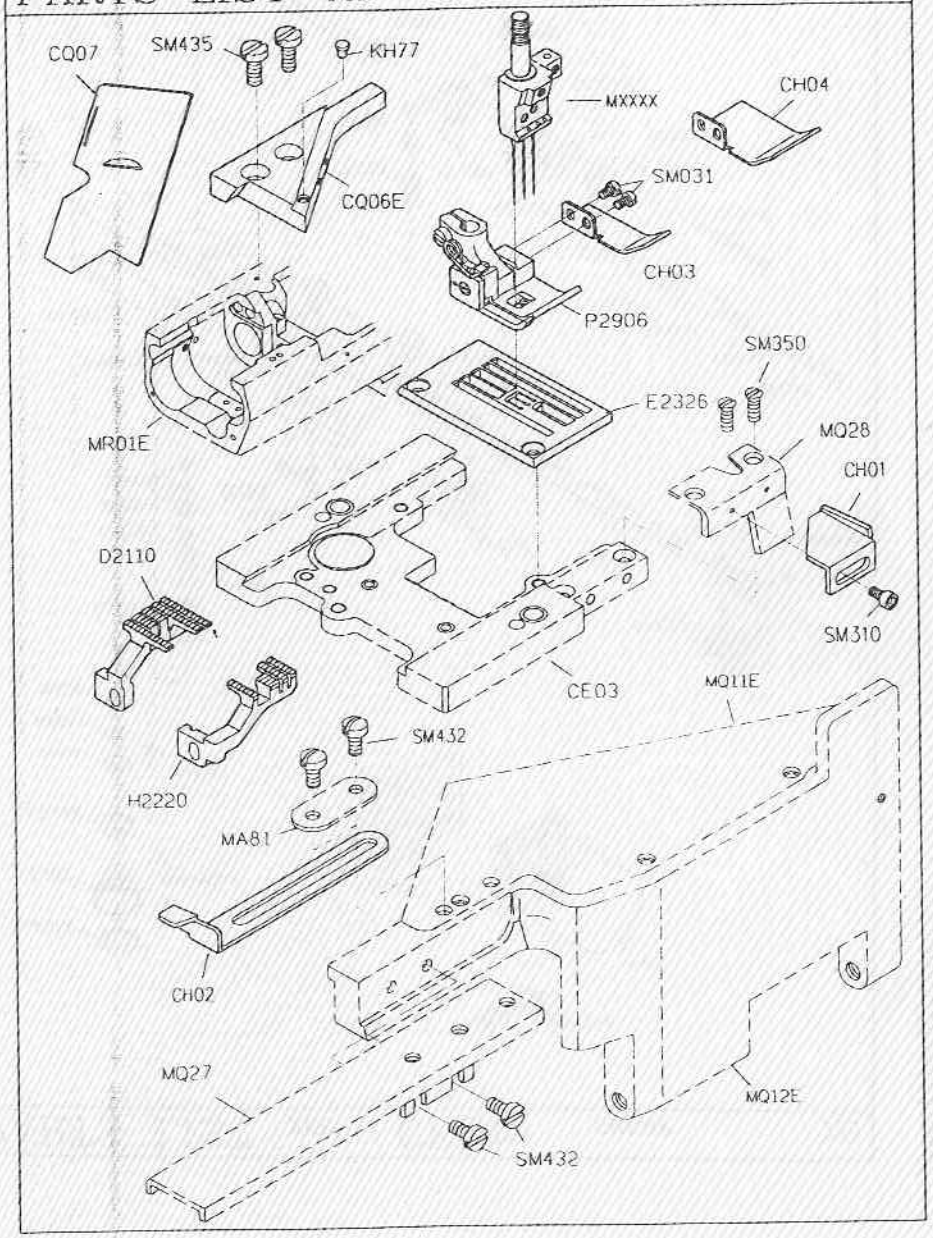

PARTS LIST FOR CL (1) GROUP

1/2

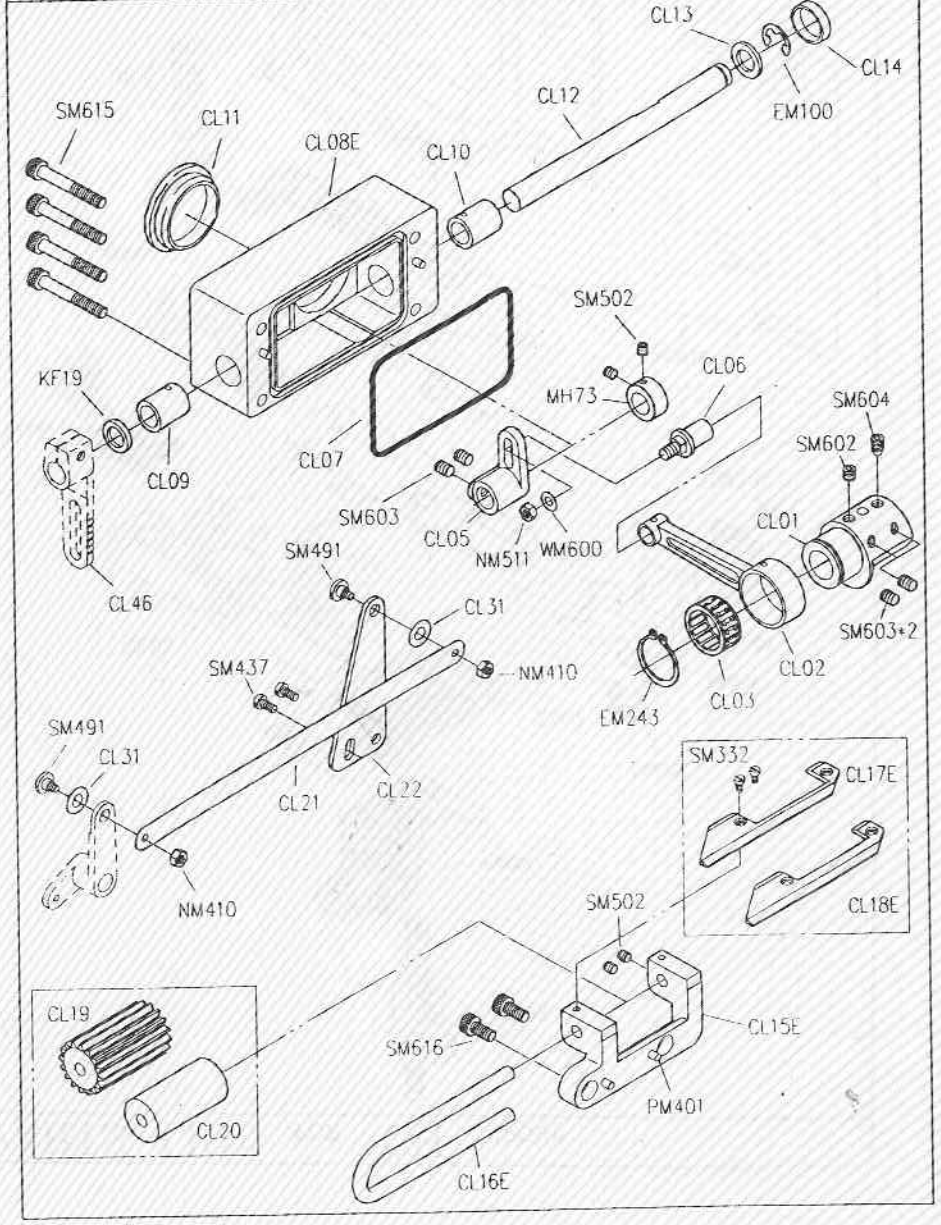

PARTS LIST FOR CL (2) GROUP 2/2

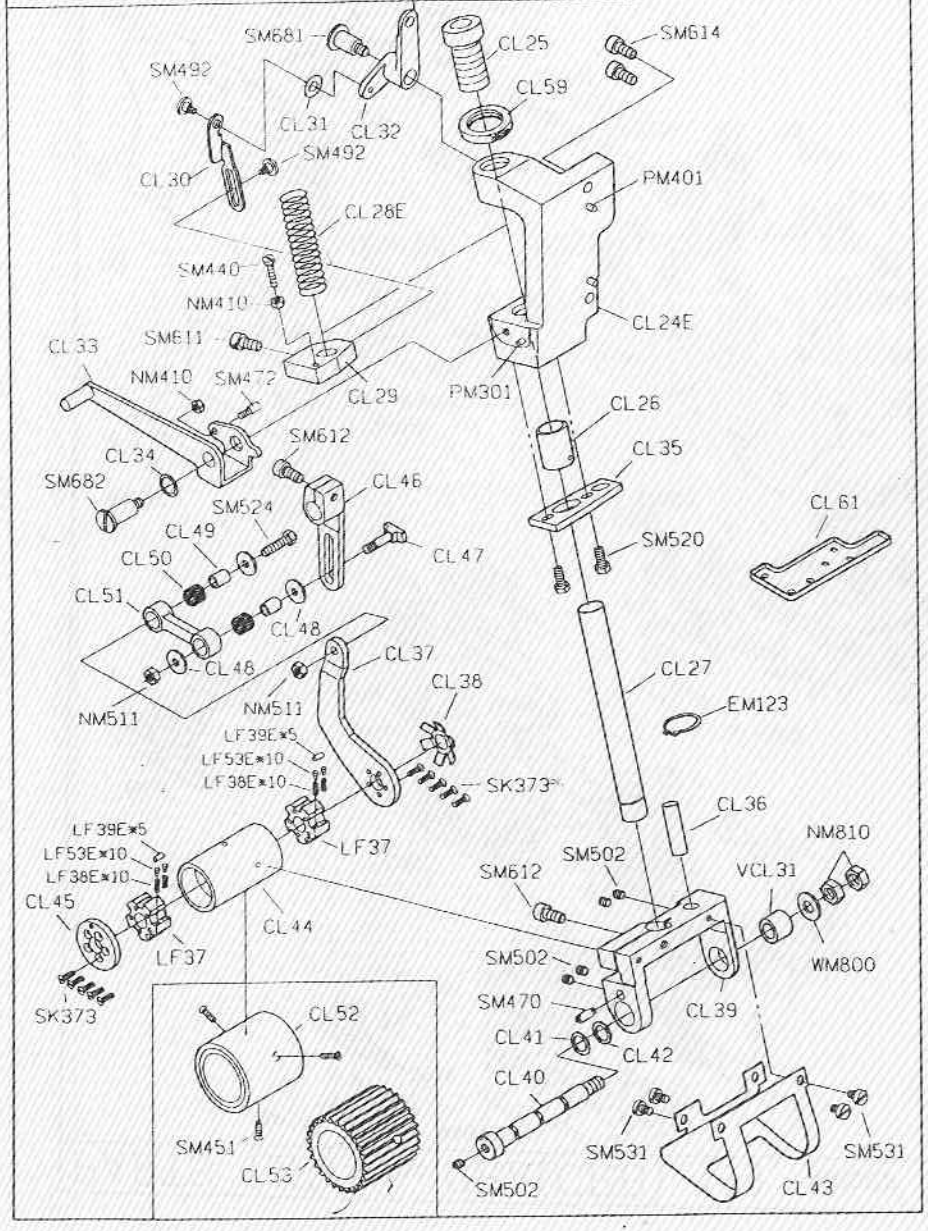

PARTS LIST FOR CQ GROUP

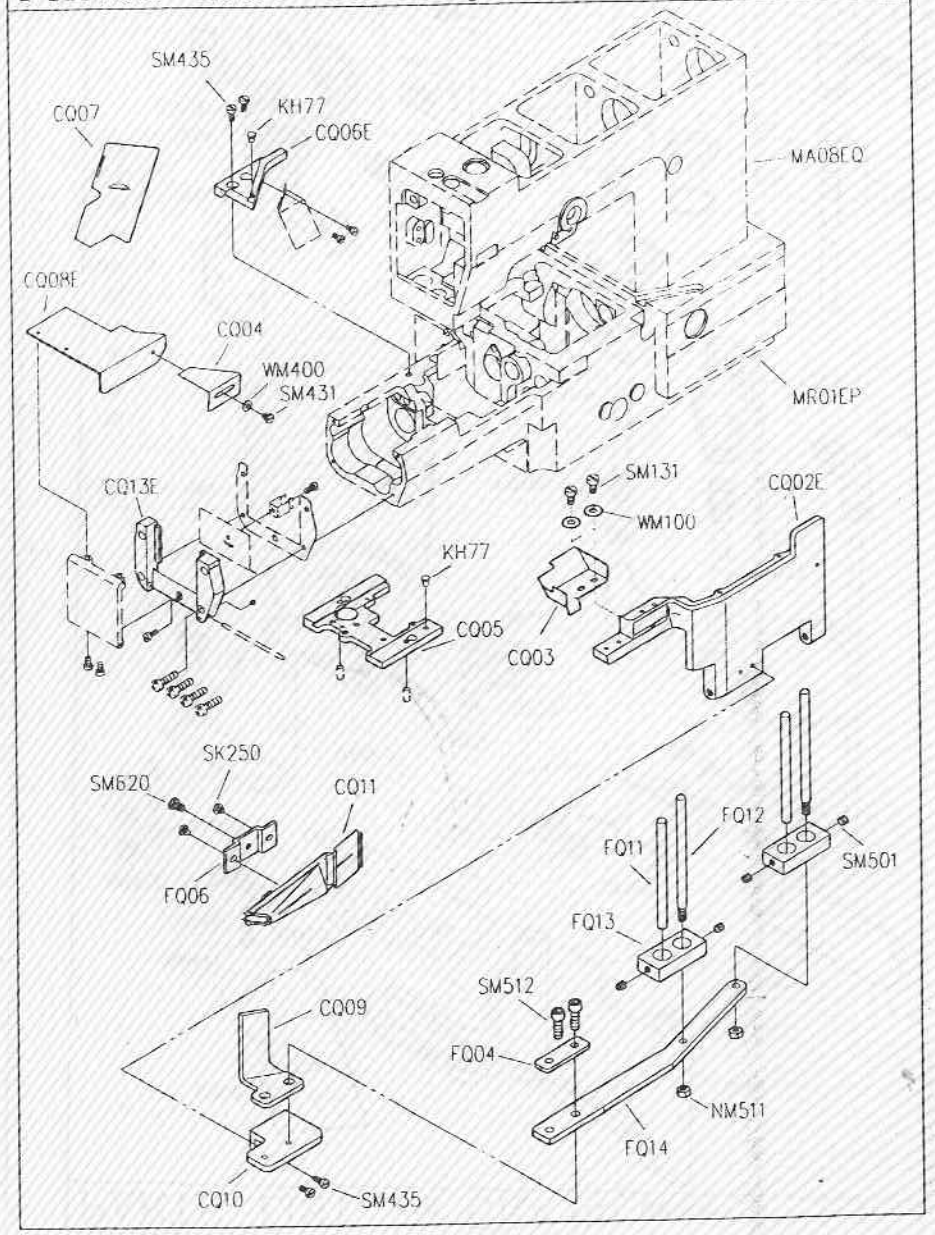

PARTS LIST FOR CRA(CRB) (1) GROUP

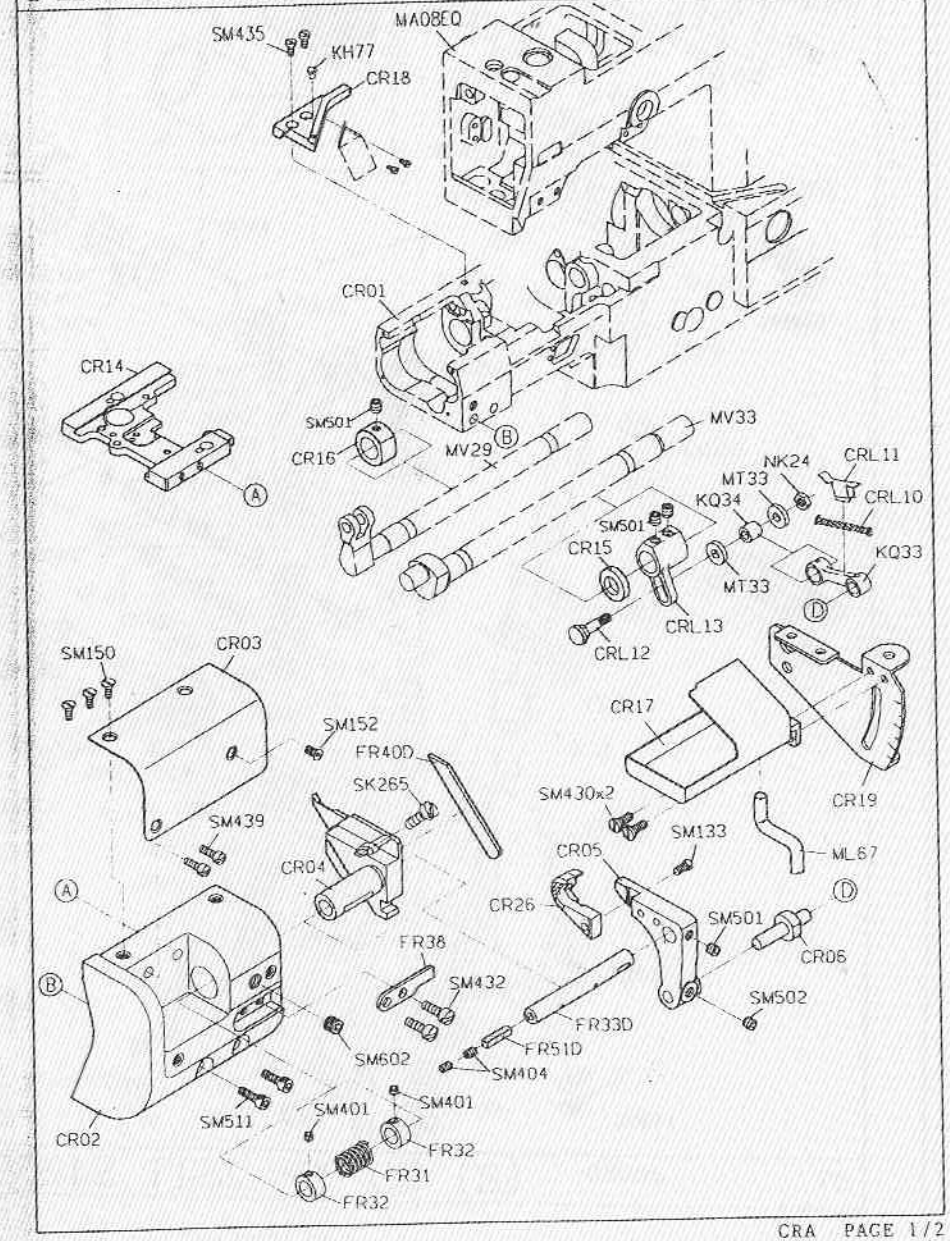

CRA PAGE 1/2
CRB PAGE 1/2

PARTS LIST FOR CRA (2) GROUP

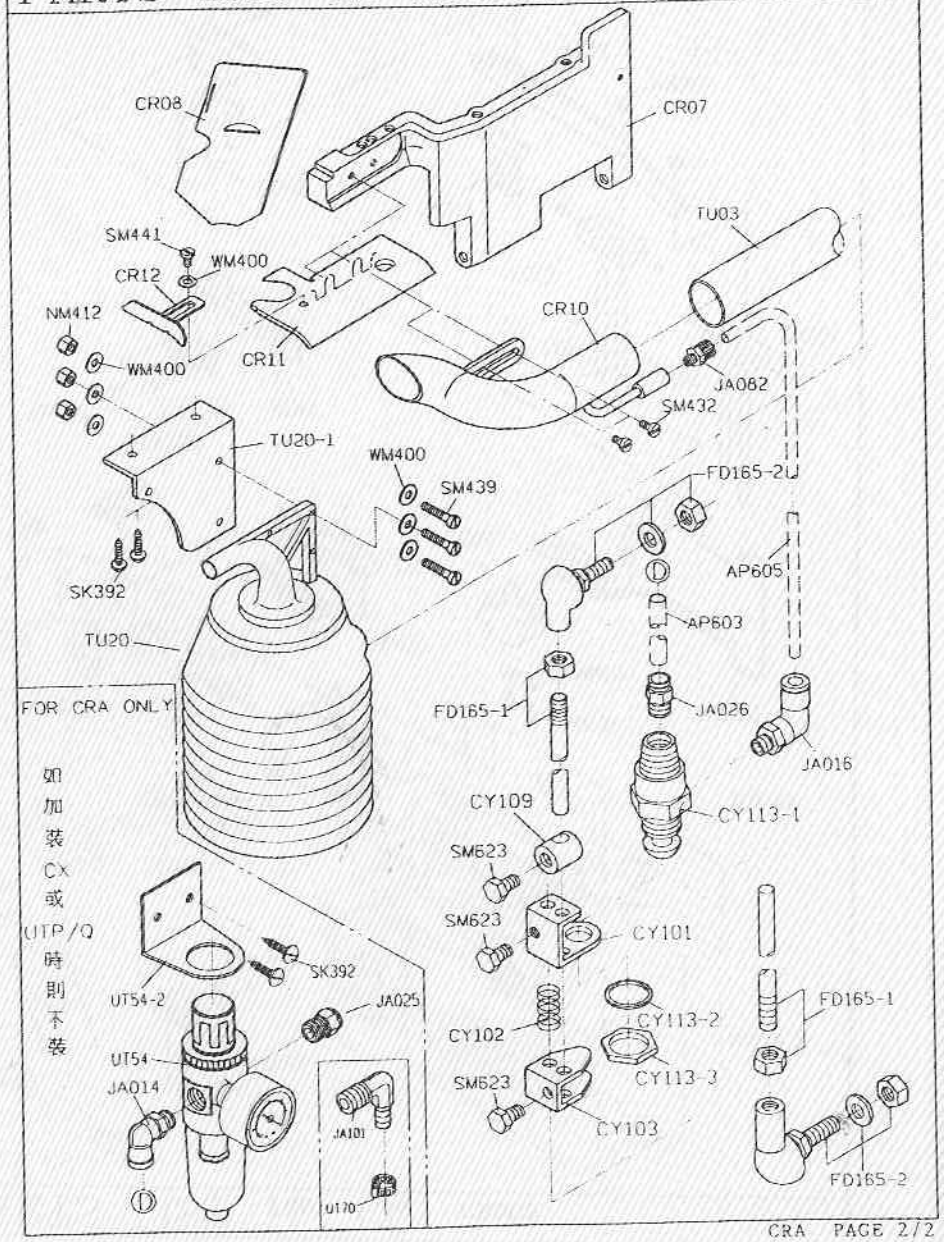

CRA PAGE 2/2

PARTS LIST FOR CRB(2) GROUP

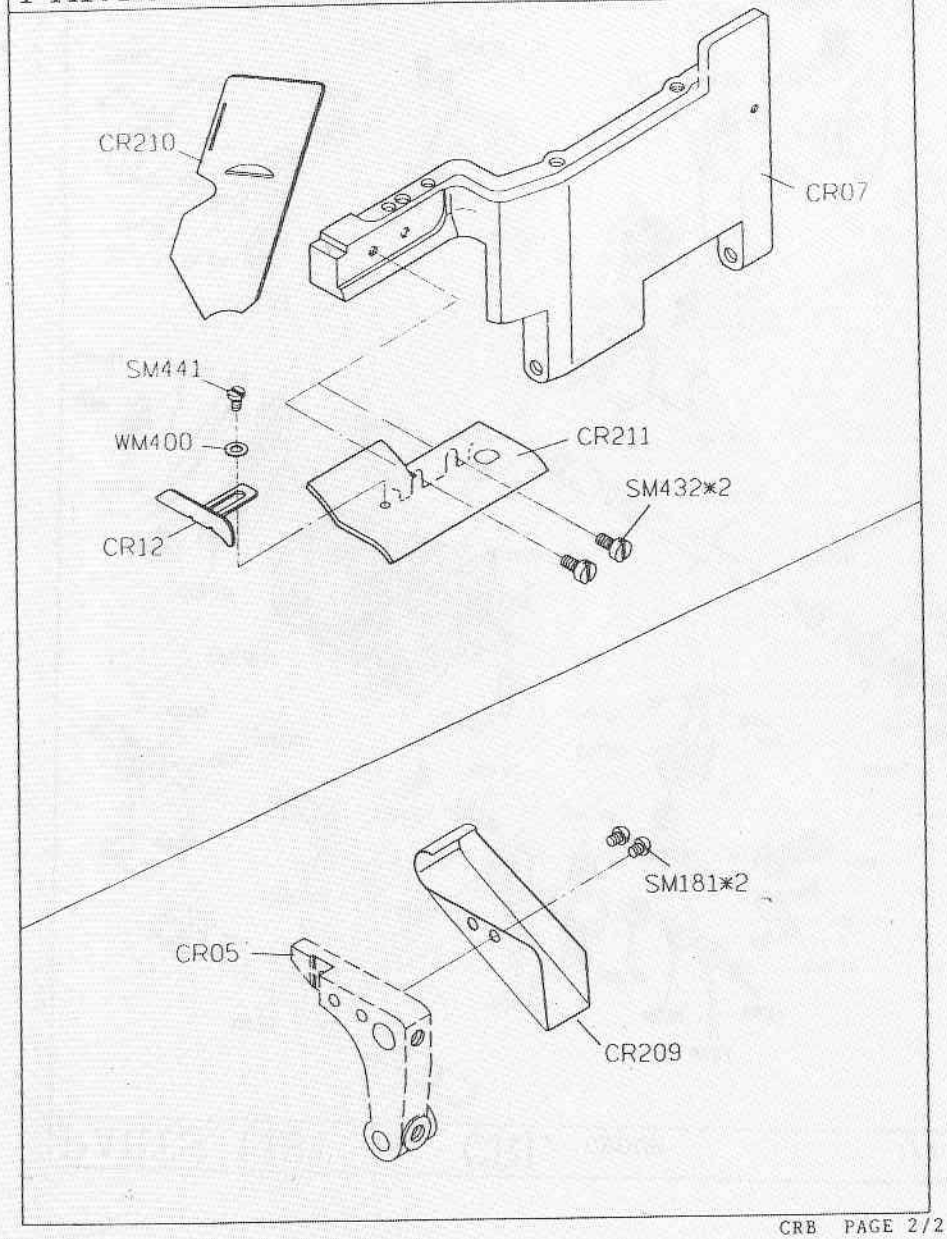

PARTS LIST FOR CRA/CX/UTP(UTQ) GROUP

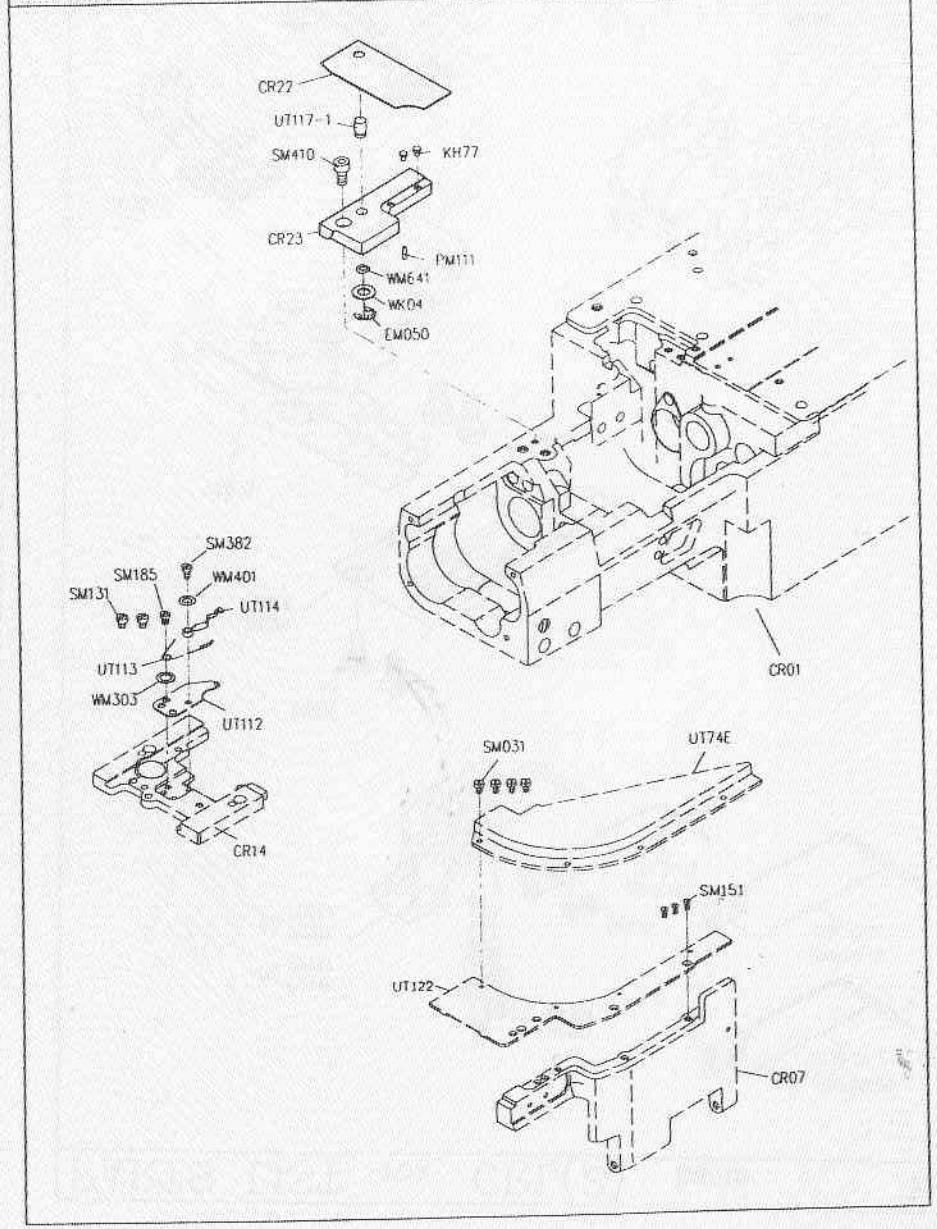

PARTS LIST FOR CRL GROUP 1/3

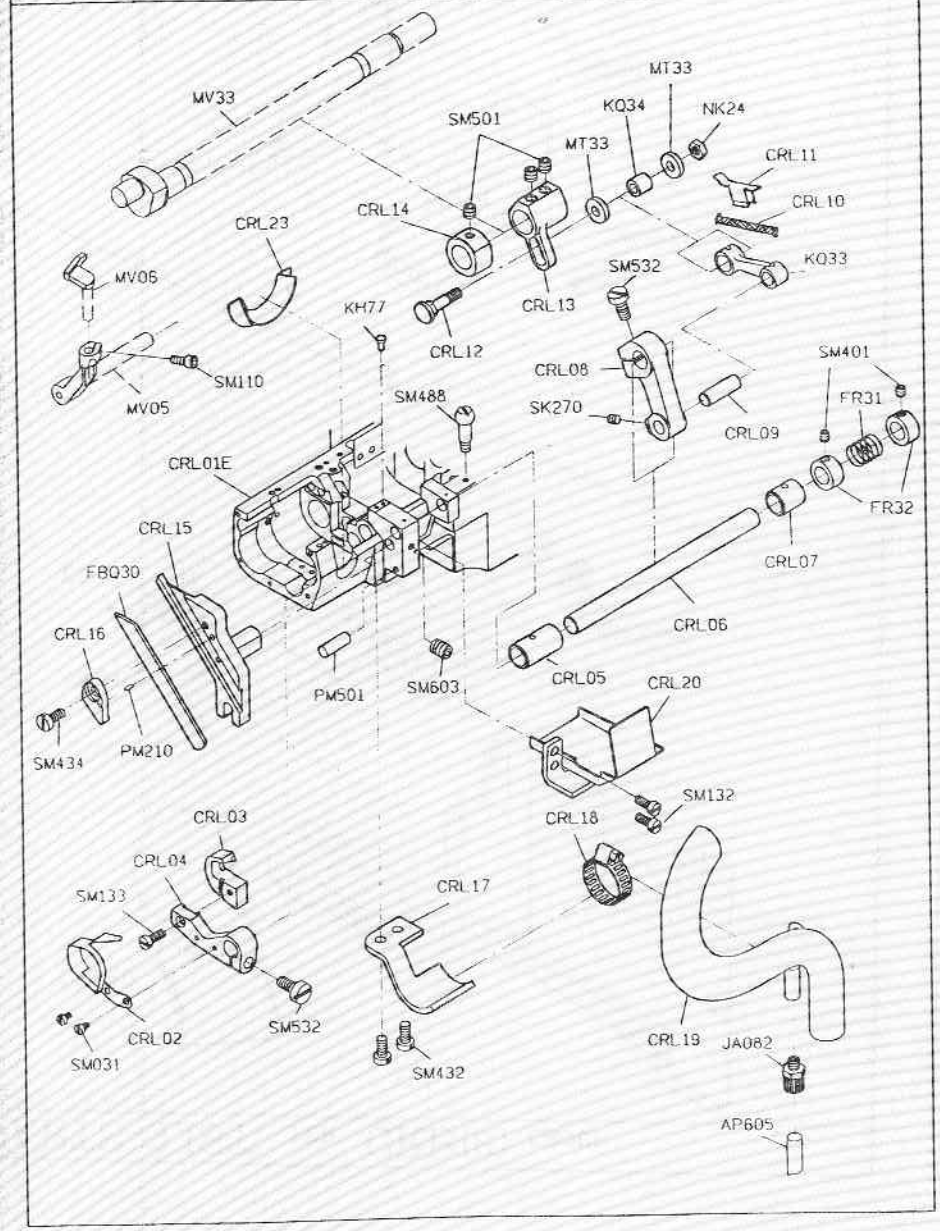

PARTS LIST FOR CRL(2) GROUP 2/3

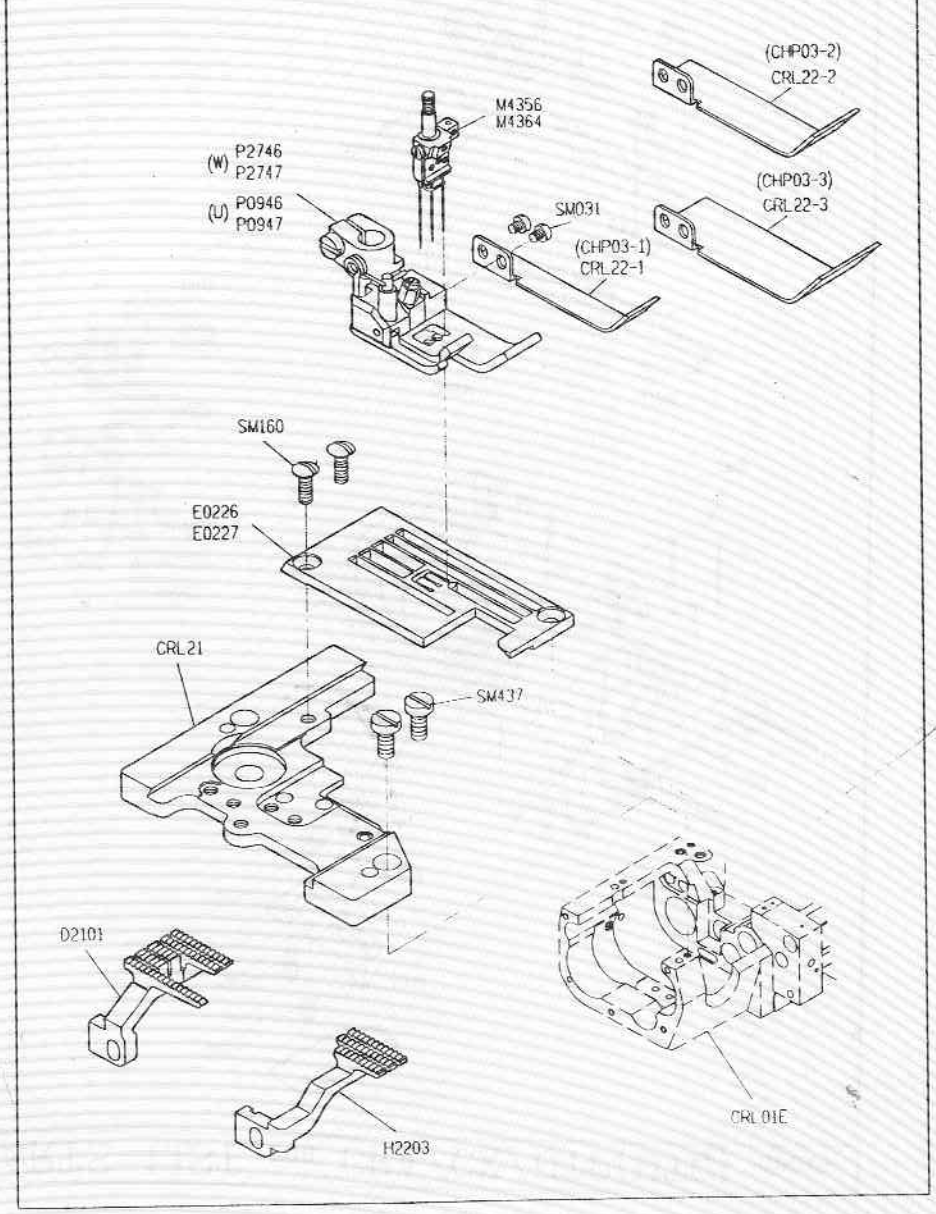

PARTS LIST FOR CRL (3) GROUP 3/3

CRL	CRL/CY(CHP)	CRL/CY/UTP(UTQ)
※ CRL25	※ CRL25	※ CY02P + UT74E
※ CRL26	※ CRL26	不用
※ CRL27	※ CRL27	※ UT73
※ CRL28	※ CRL28	※ CY16P
※ CH02	※ CY03 + CY04	不用
※ CQ06E	※ CQ06E	※ UT116P + UT117P

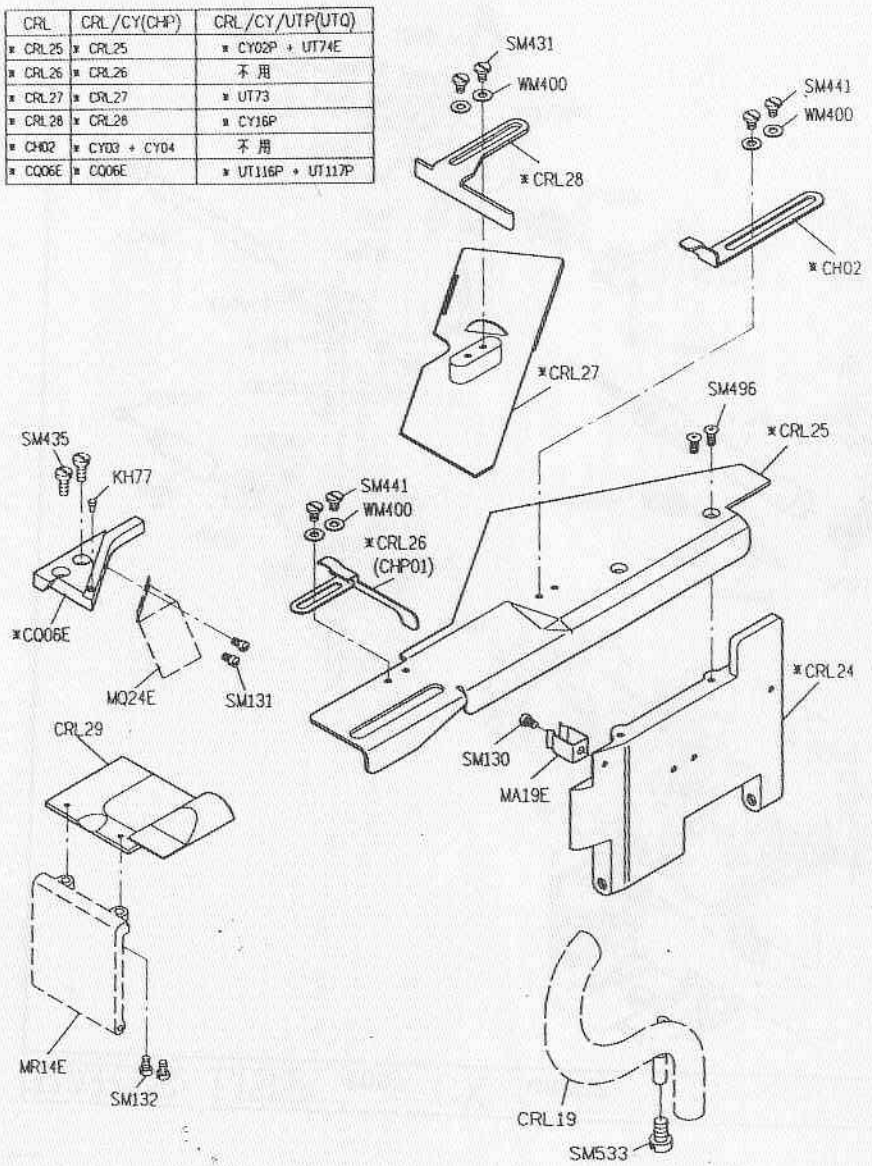

PARTS LIST FOR CRL/CY/UTP(UTQ) GROUP

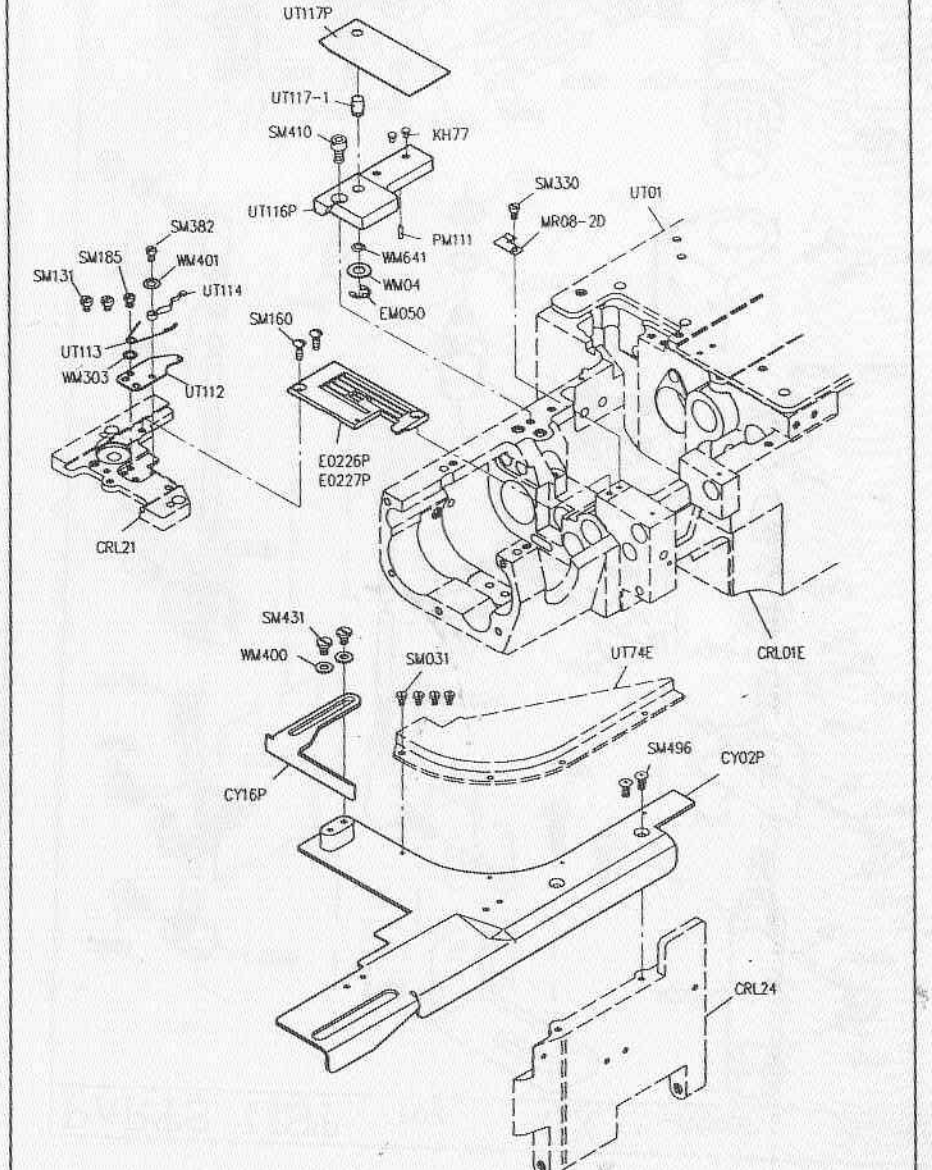

PARTS LIST FOR CX GROUP 1/3

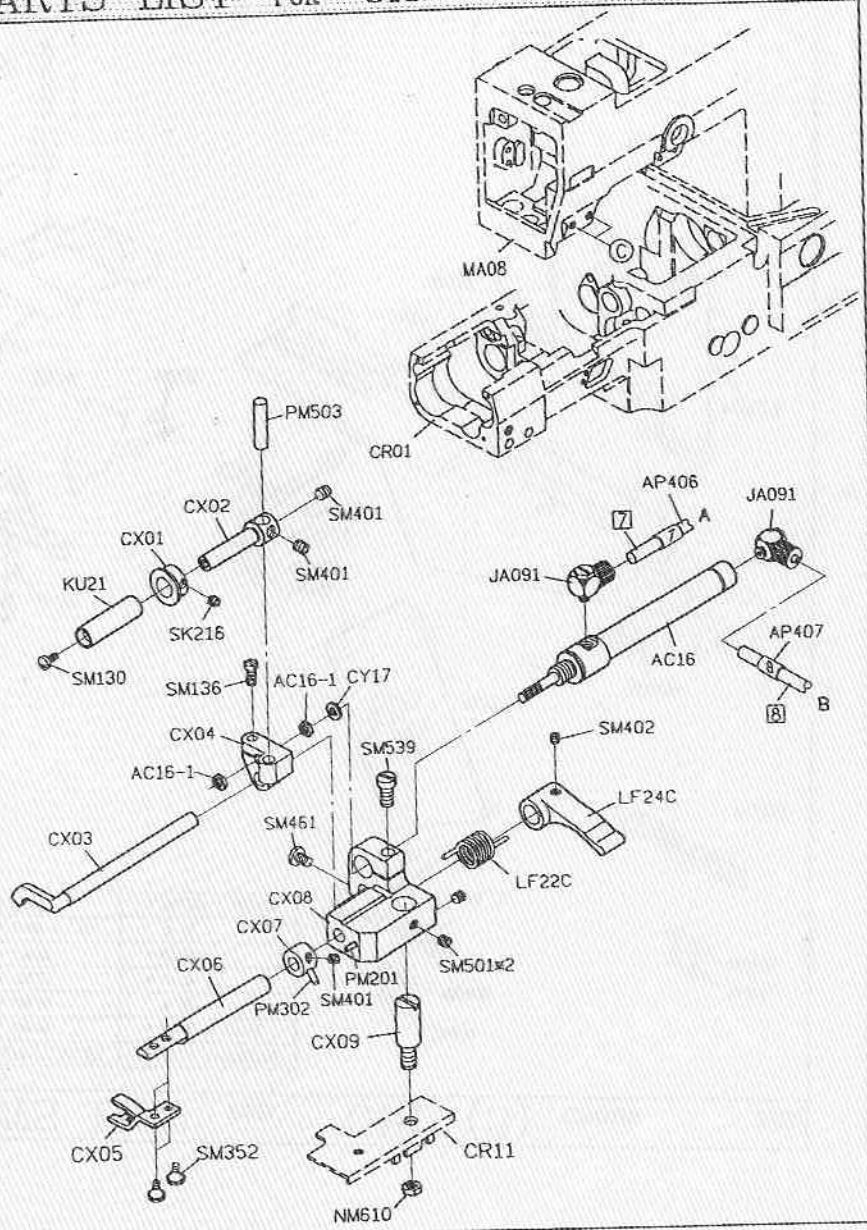

PARTS LIST FOR CX GROUP 2/3

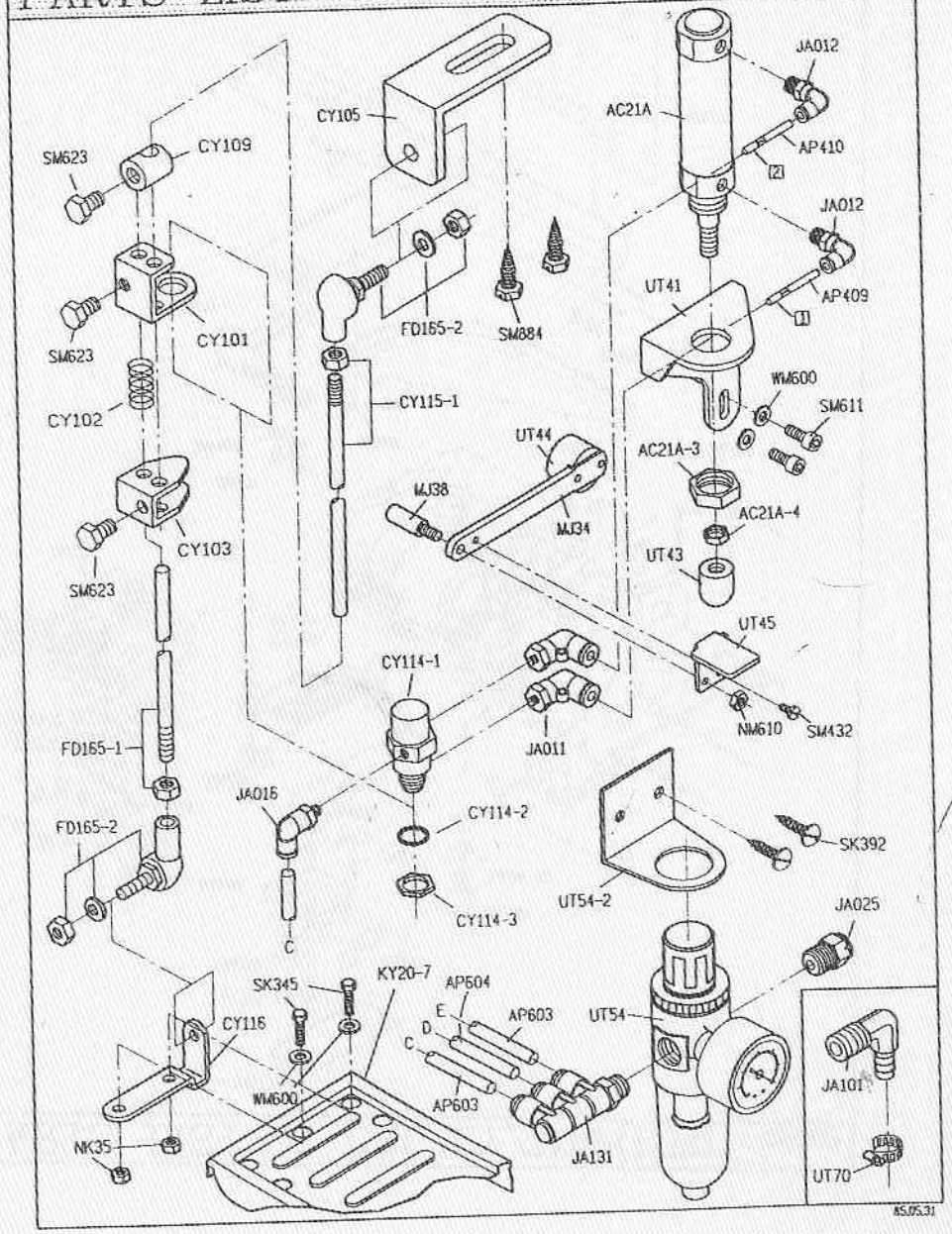

MZ215-1

PARTS LIST FOR CX GROUP 3/3

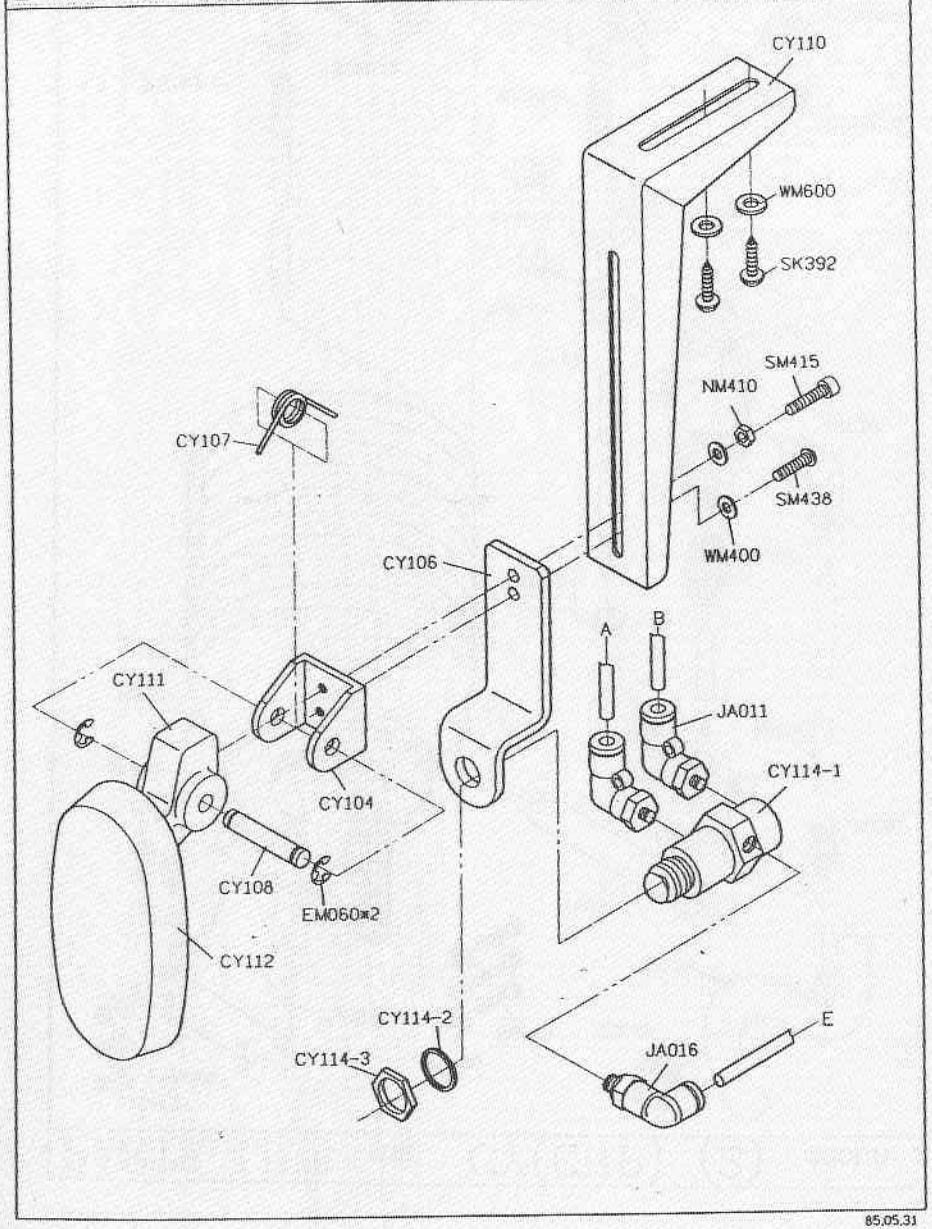

85.05.31

PARTS LIST FOR CY(CHP) (1) GROUP 1/4

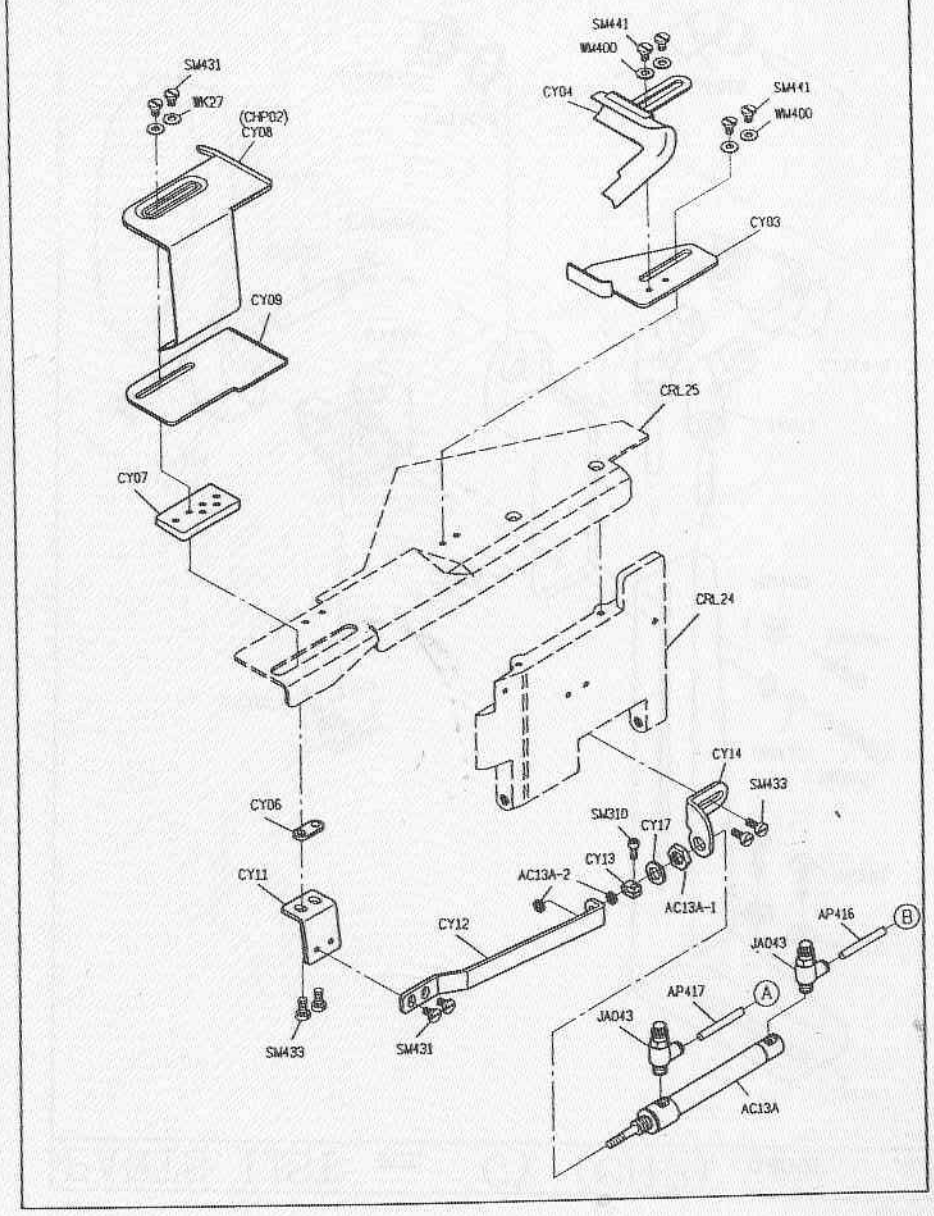

PARTS LIST FOR CY(CHP) (2) GROUP 2/4

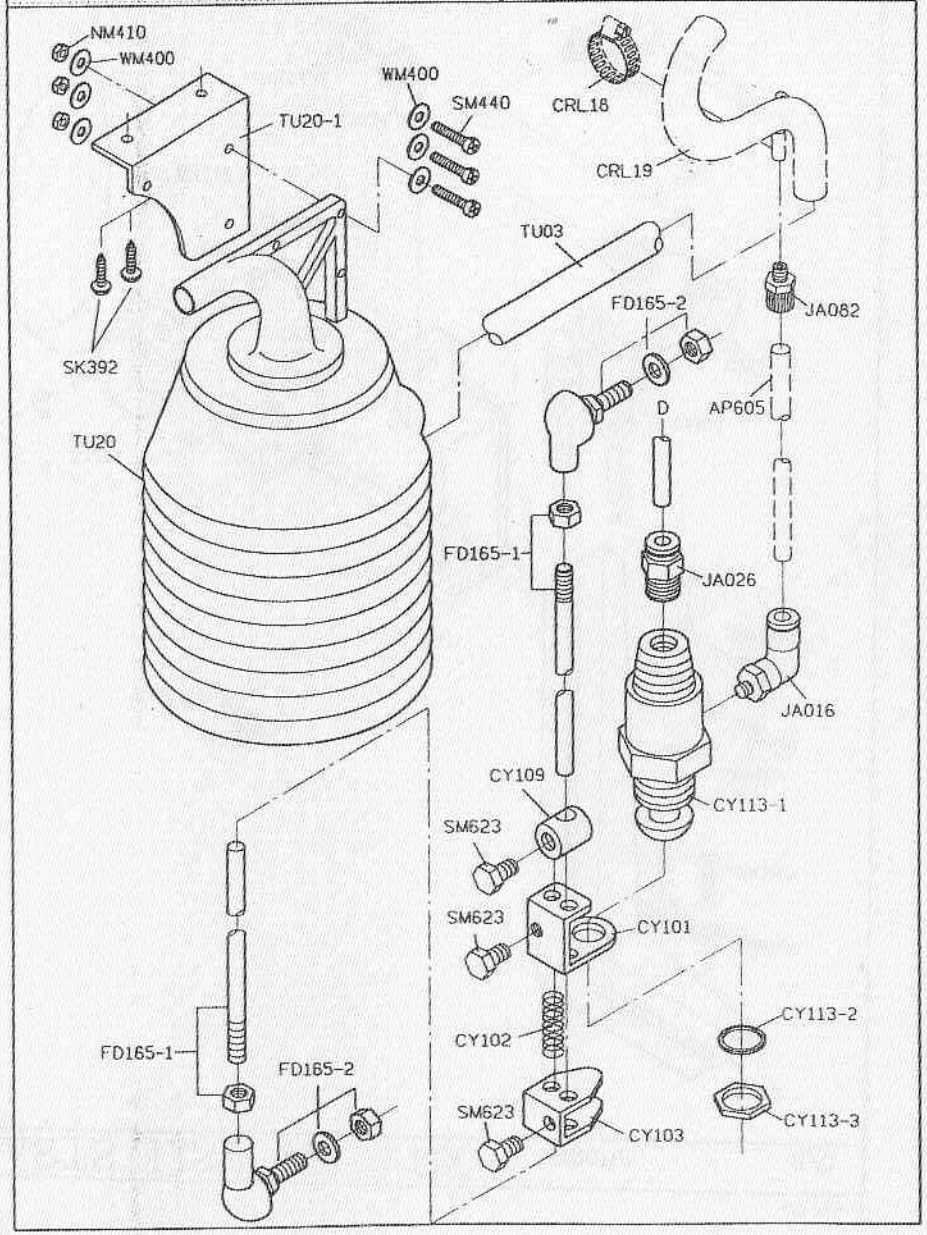

PARTS LIST FOR CY (CHP) GROUP 3/4

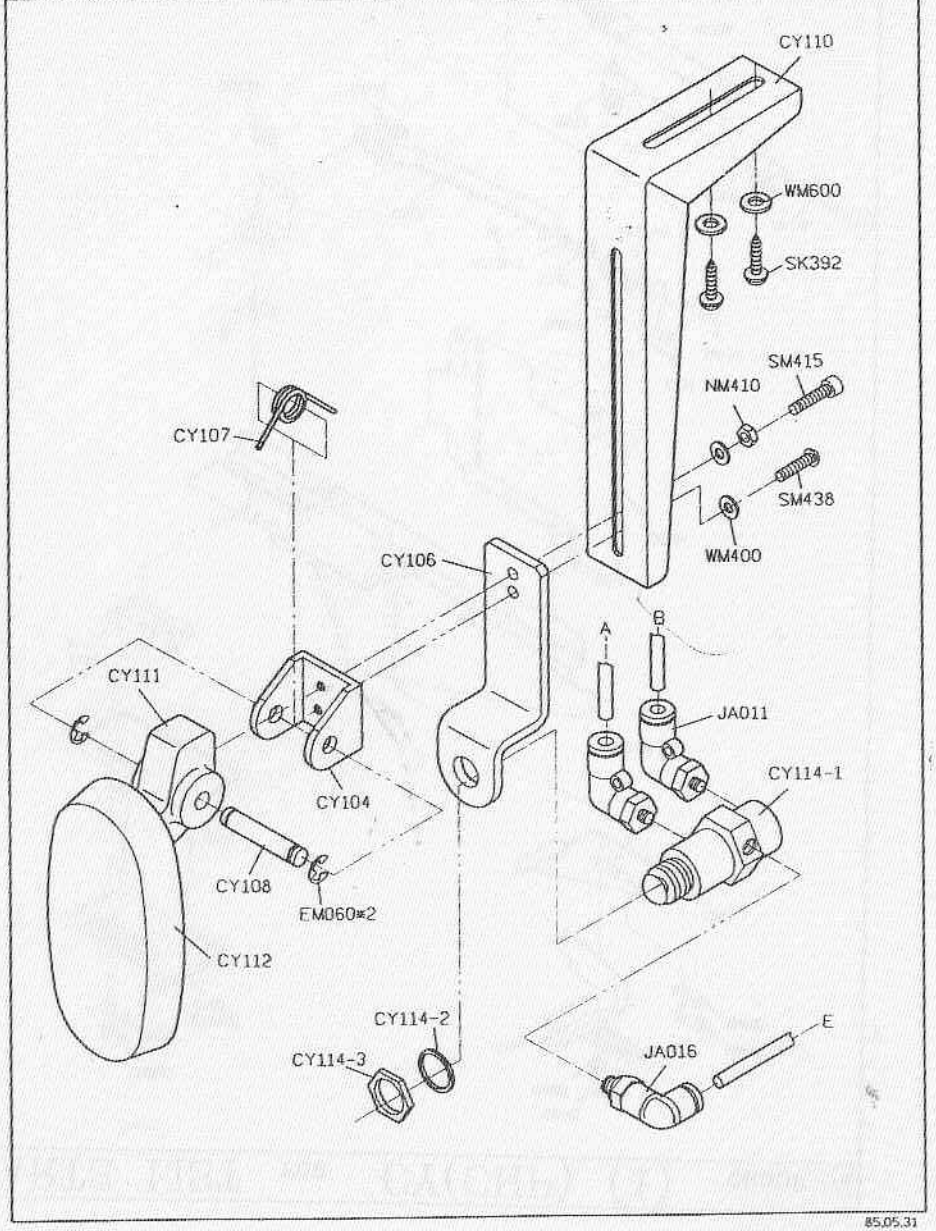

85.05.31

MZ216-4

PARTS LIST FOR CY (CHP) GROUP 4/4

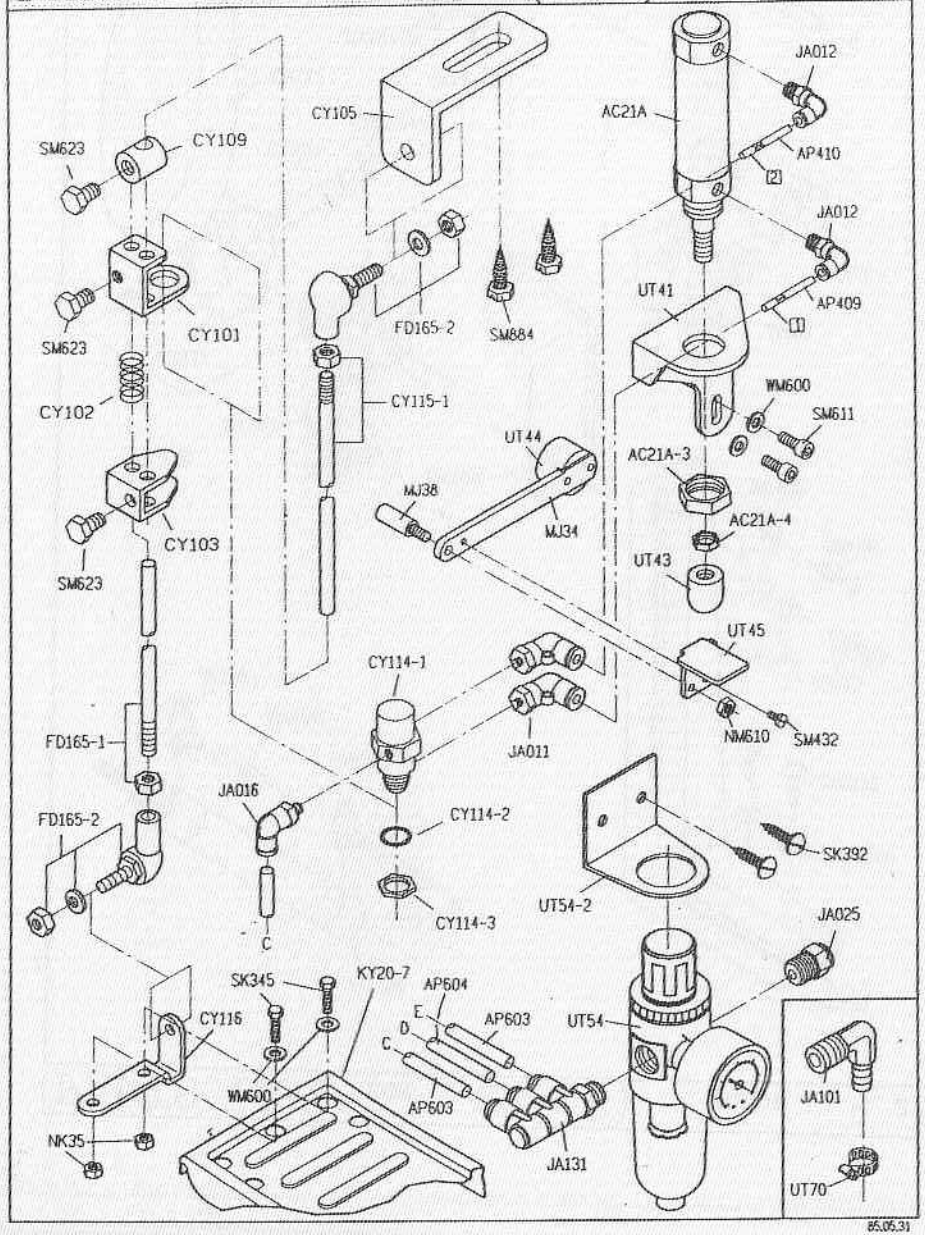

PARTS LIST FOR CZ (1) GROUP 1/3

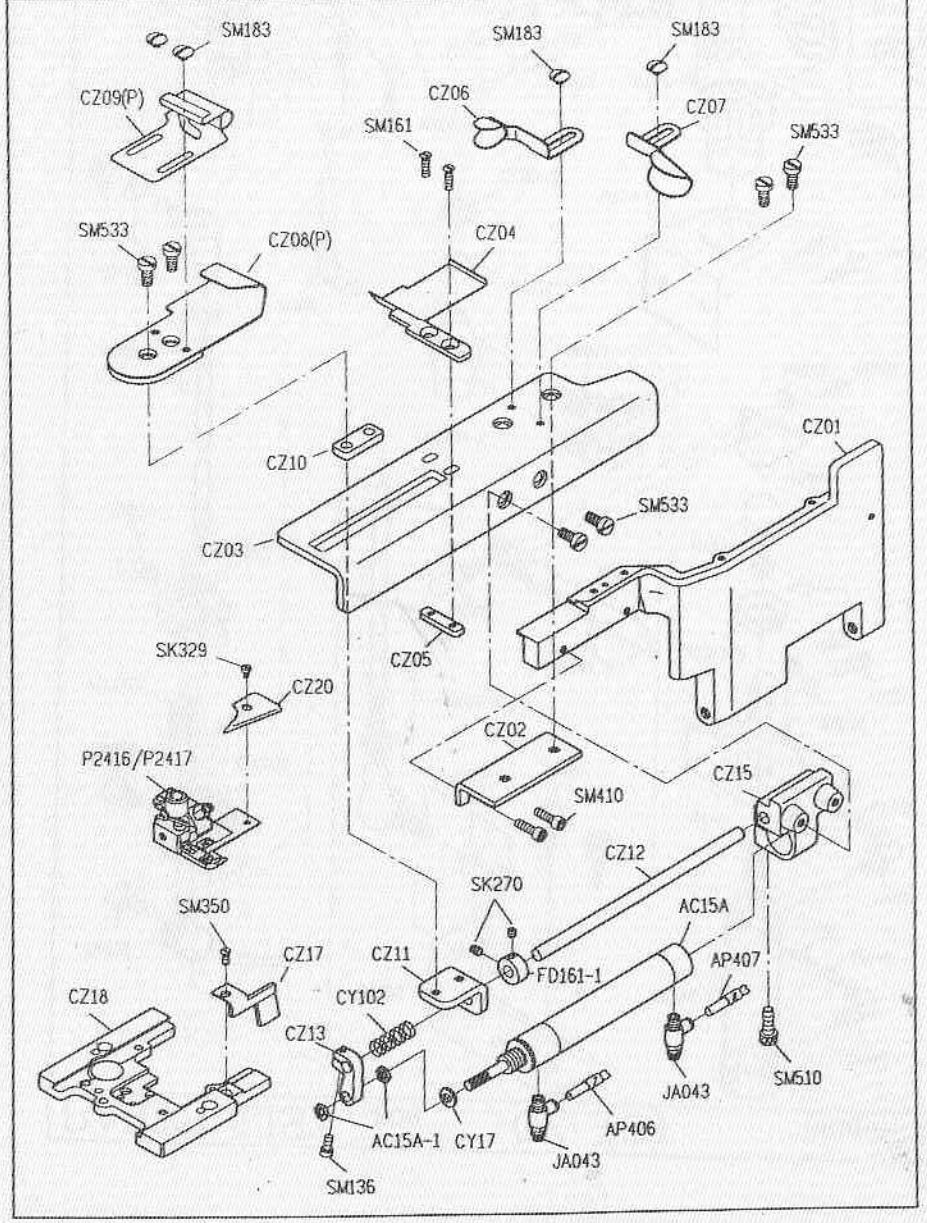

PARTS LIST FOR CZ (2) GROUP 2/3

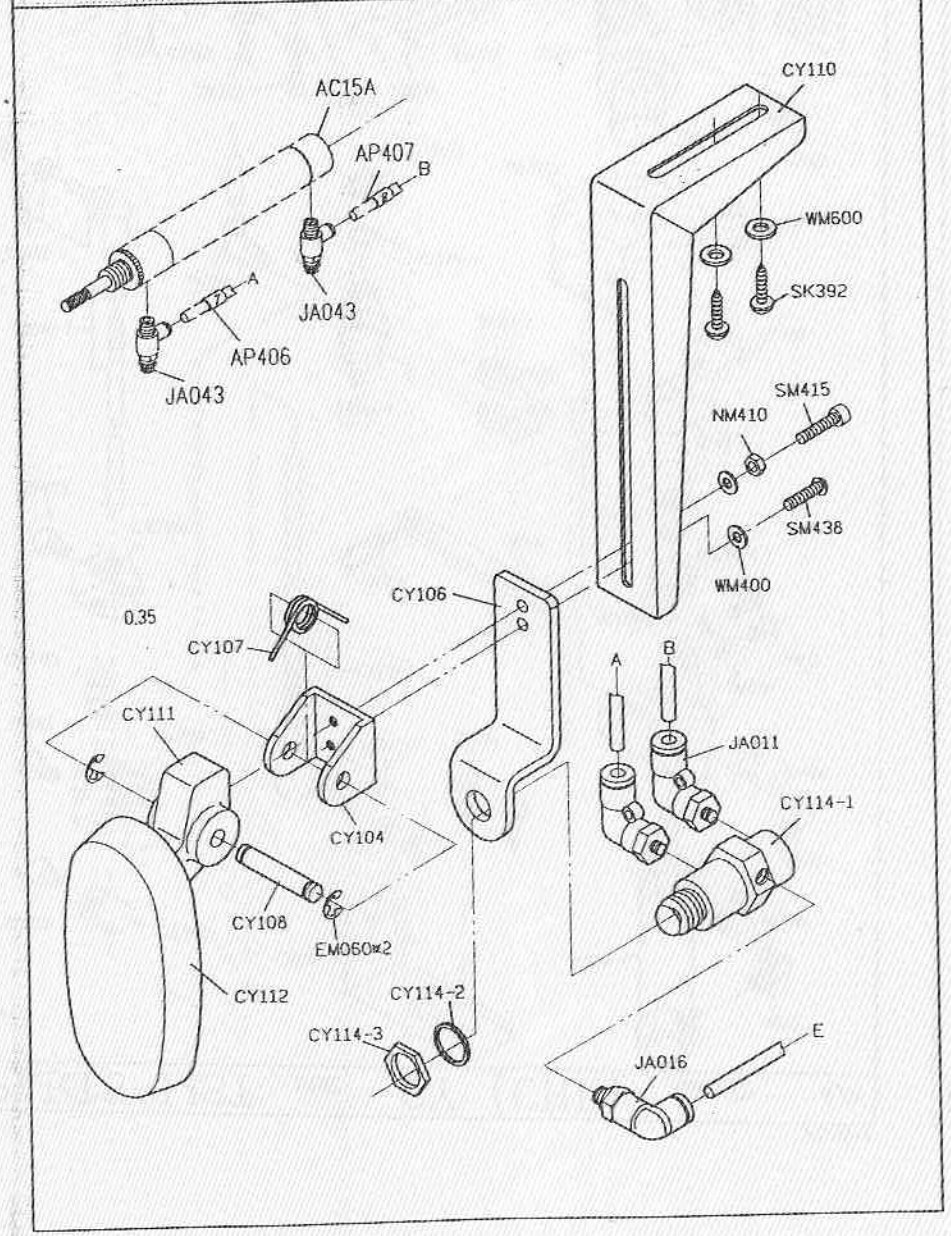

PARTS LIST FOR CZ (3) GROUP 3/3

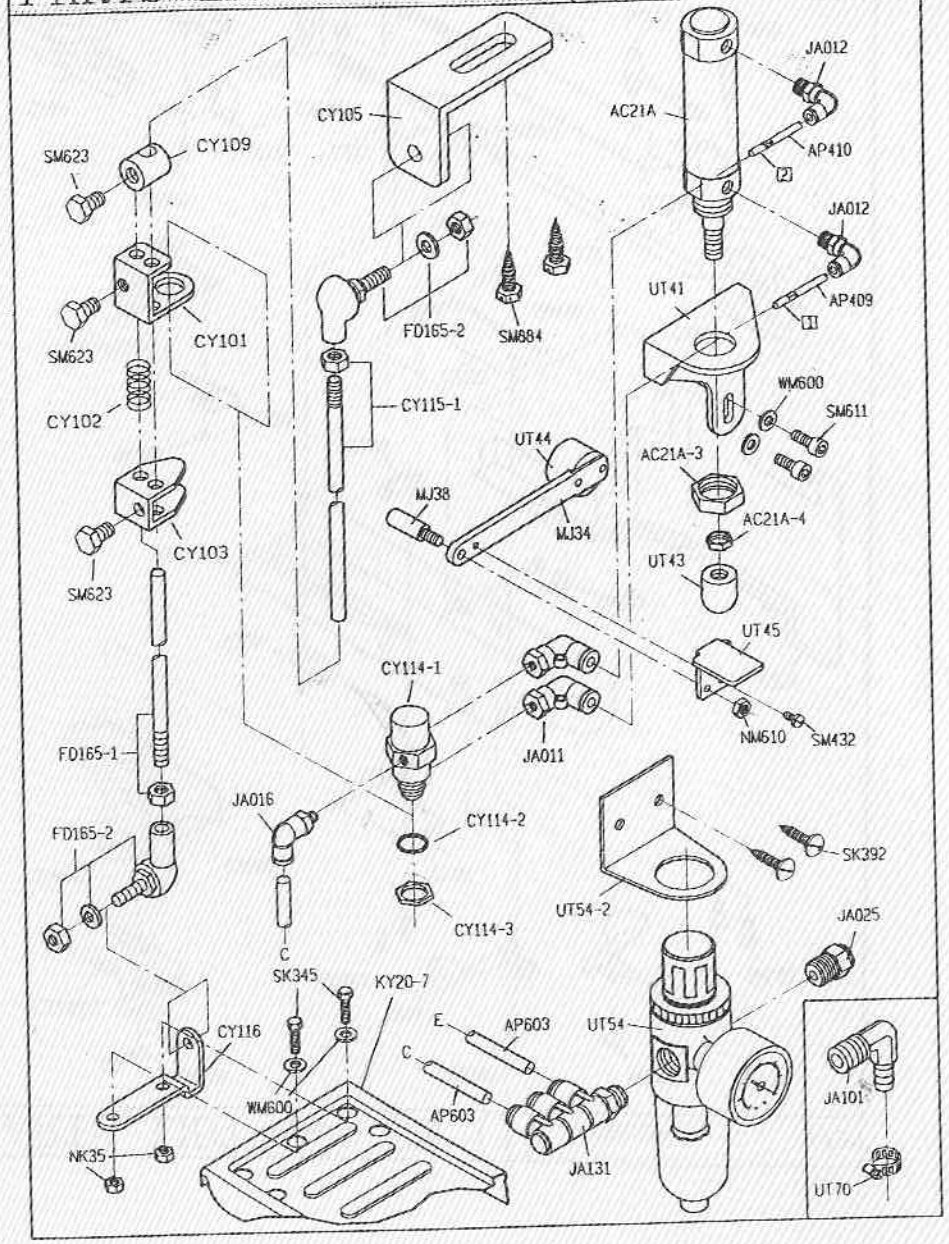

PARTS LIST FOR CZ/UTP(UTQ) GROUP

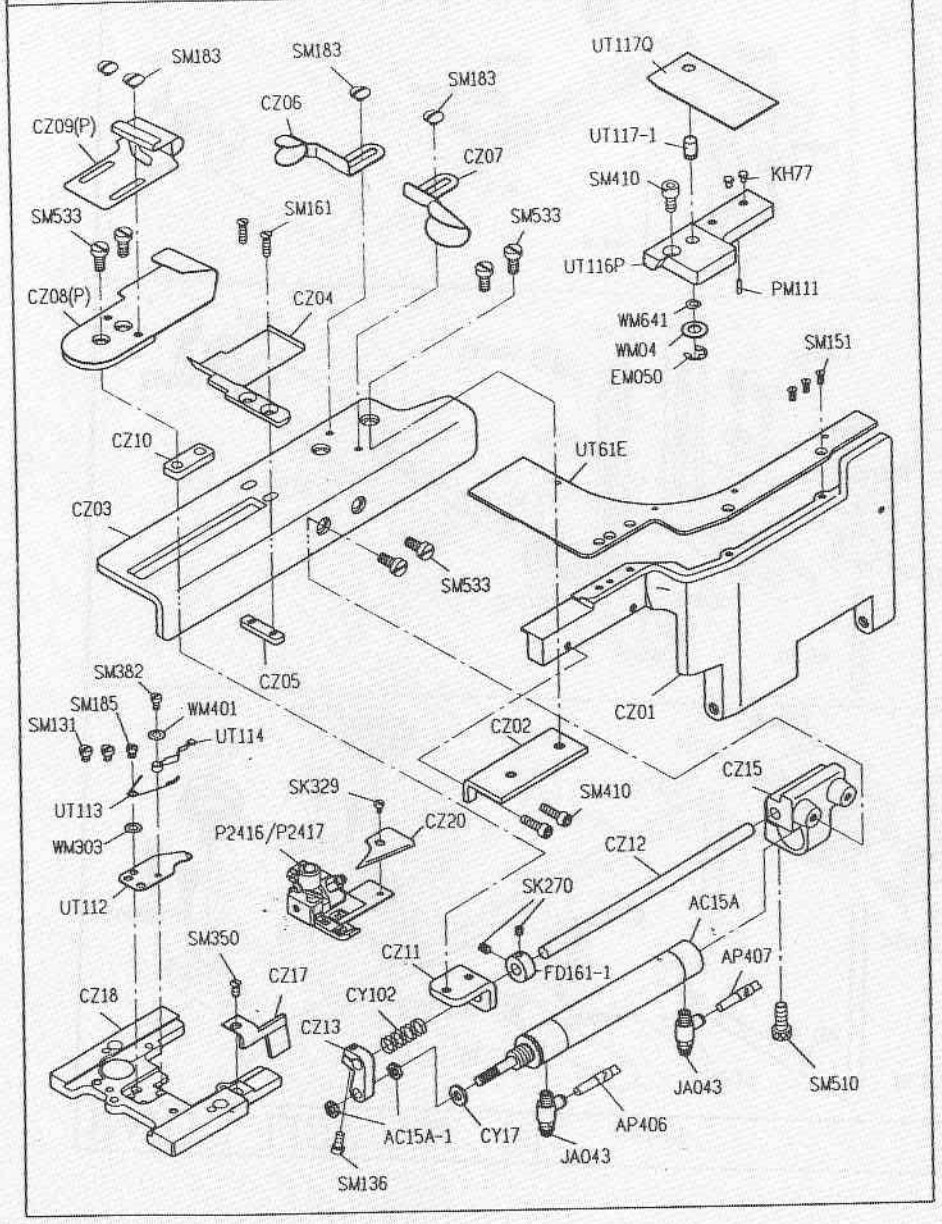

PARTS LIST FOR CZP GROUP

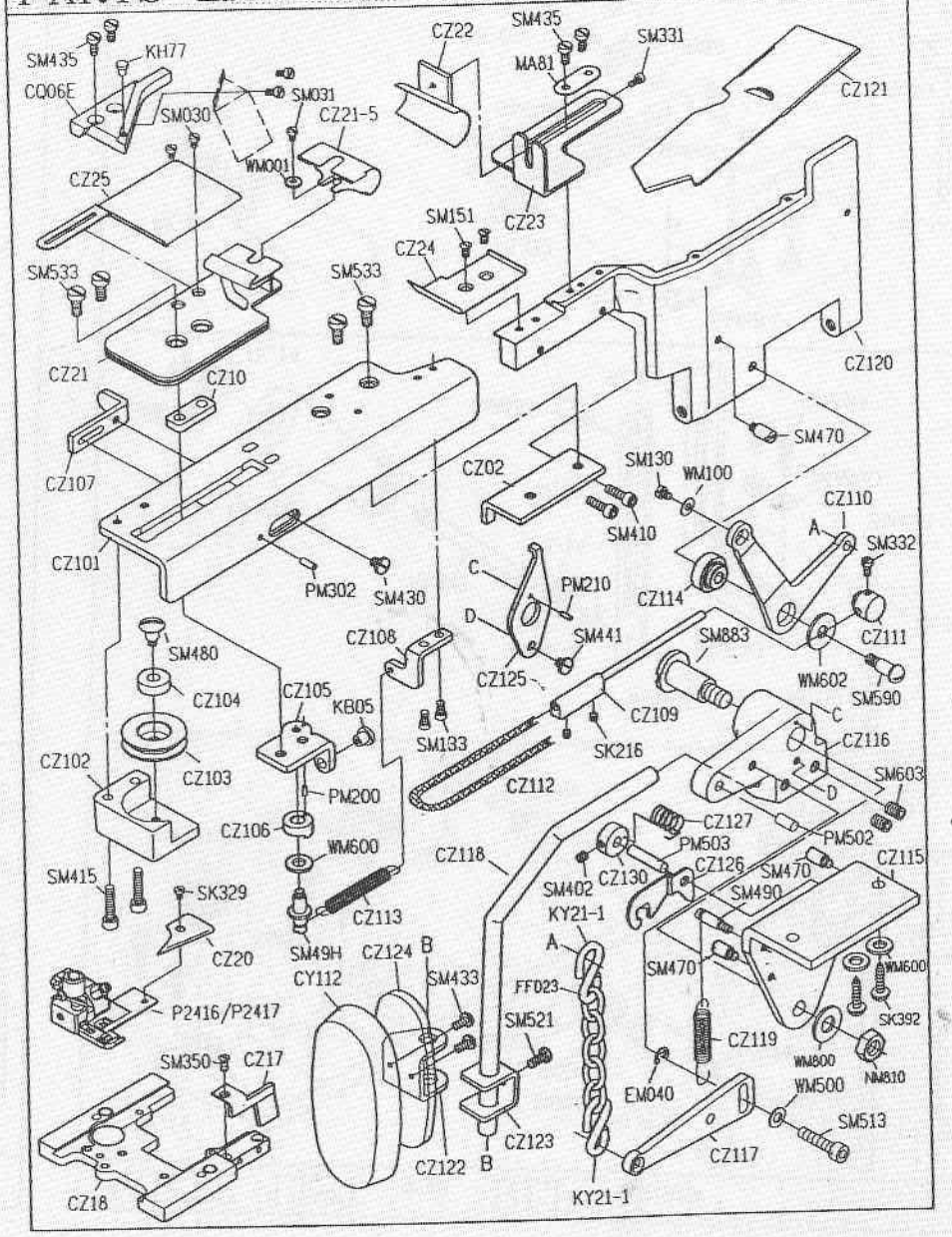

PARTS LIST FOR RL GROUP

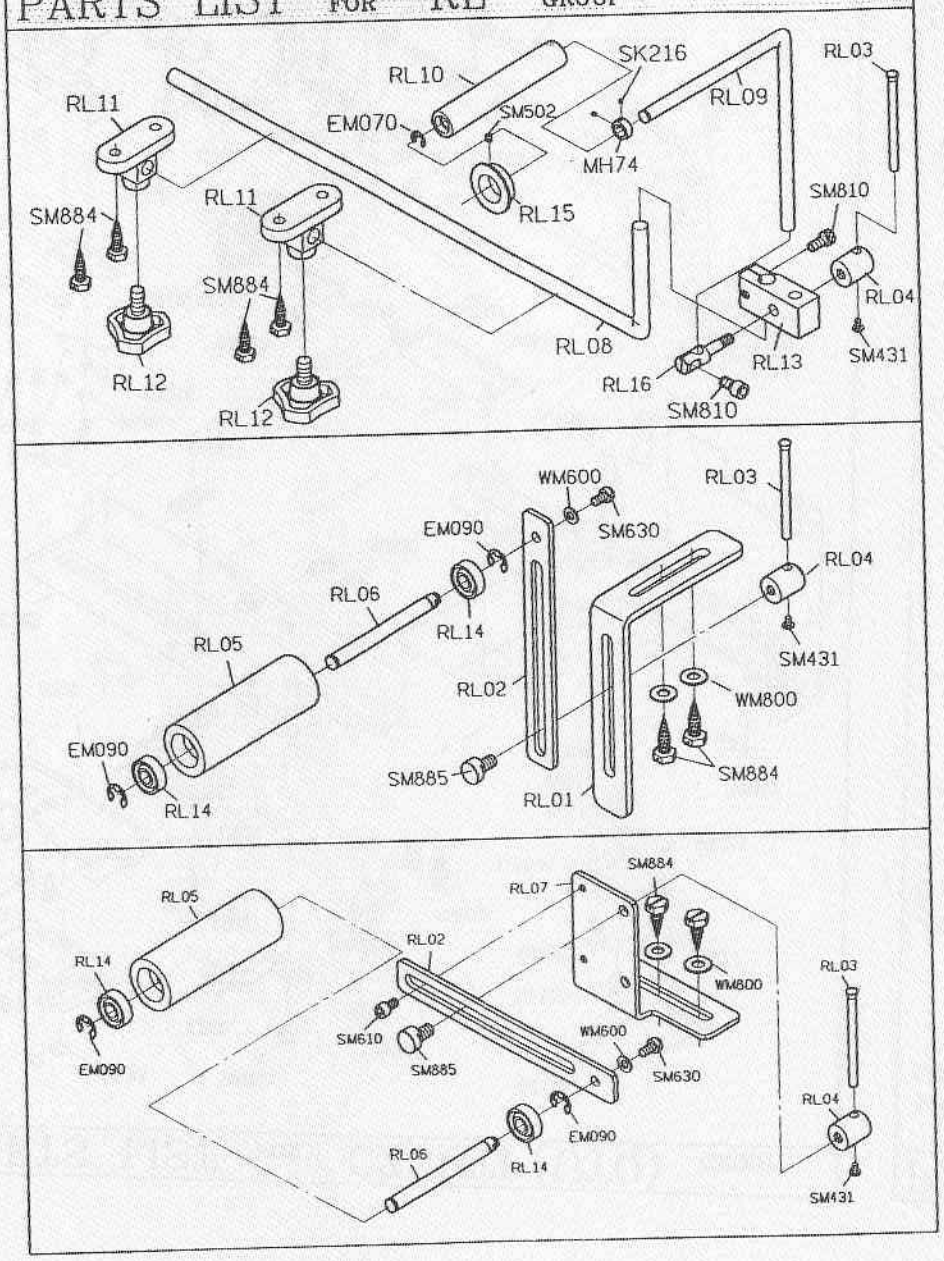

PARTS LIST FOR RLP GROUP

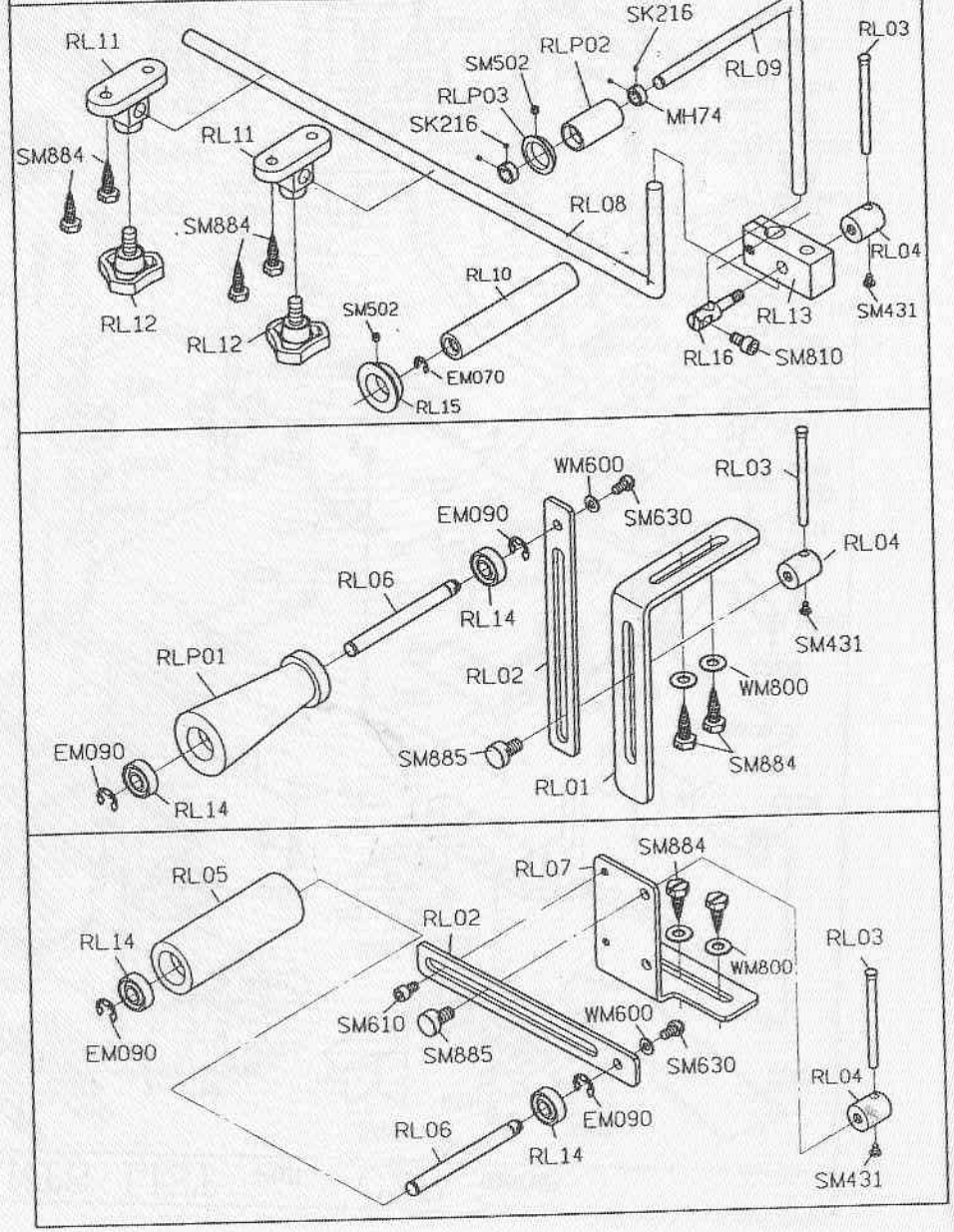

PARTS LIST FOR RLQ GROUP

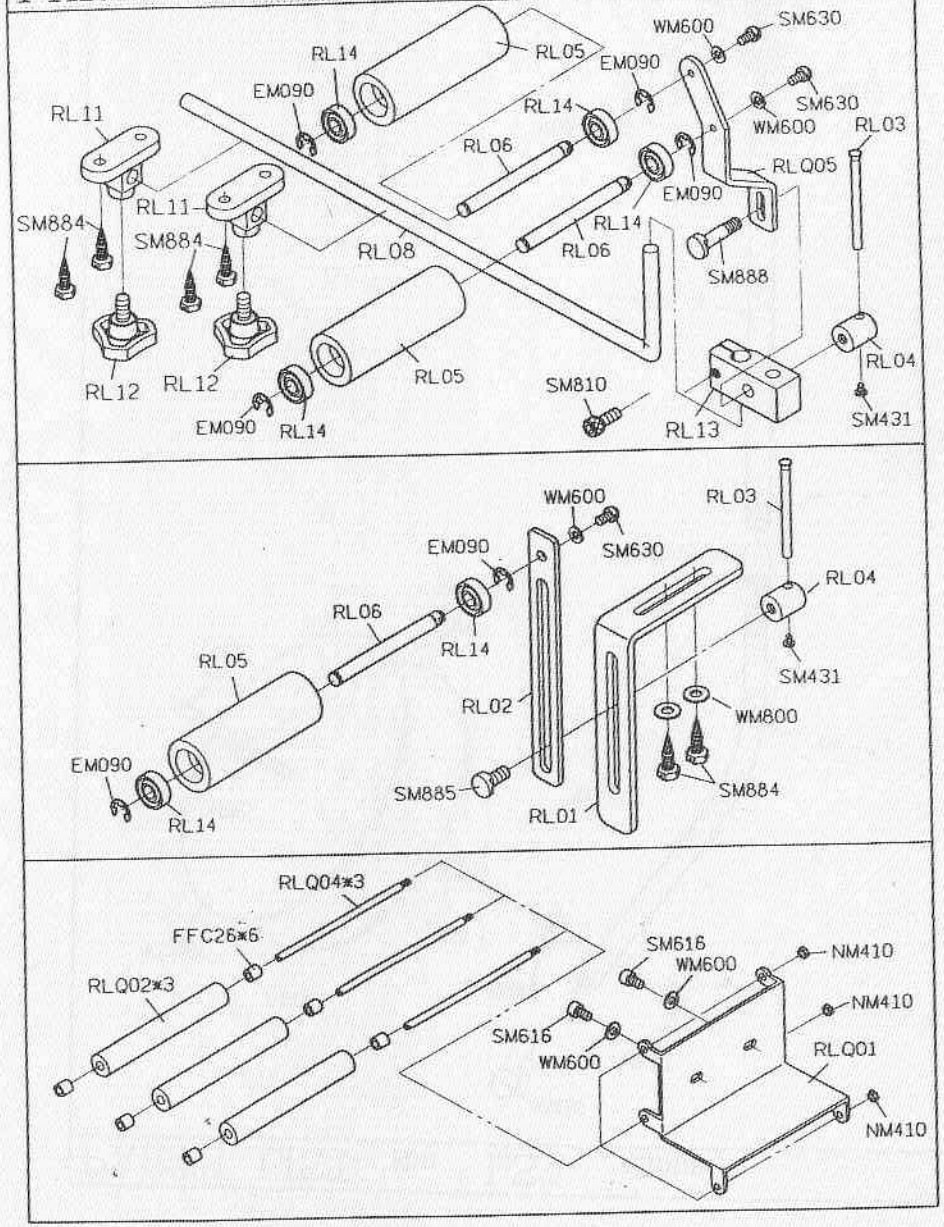

PARTS LIST FOR LS GROUP

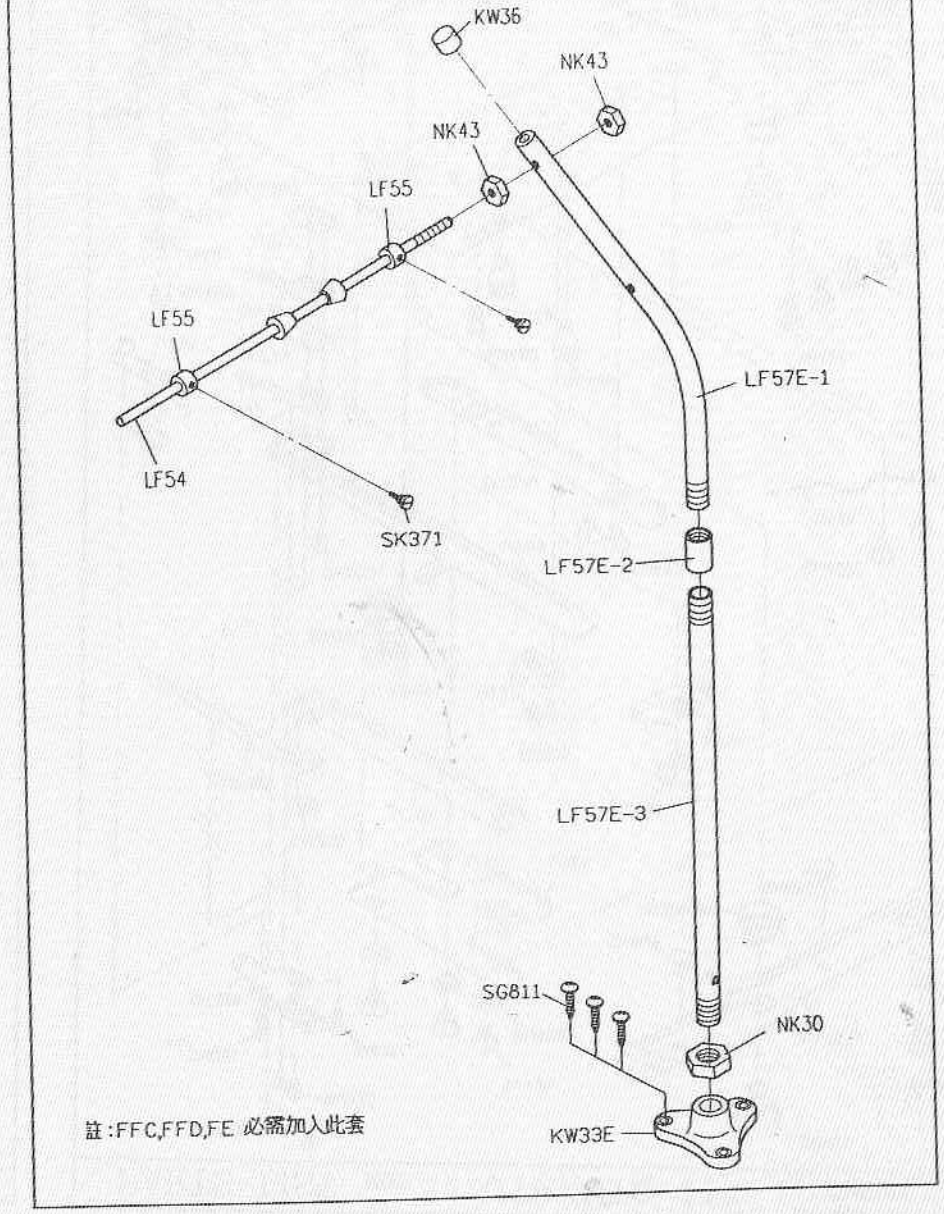

PARTS LIST FOR LSA GROUP

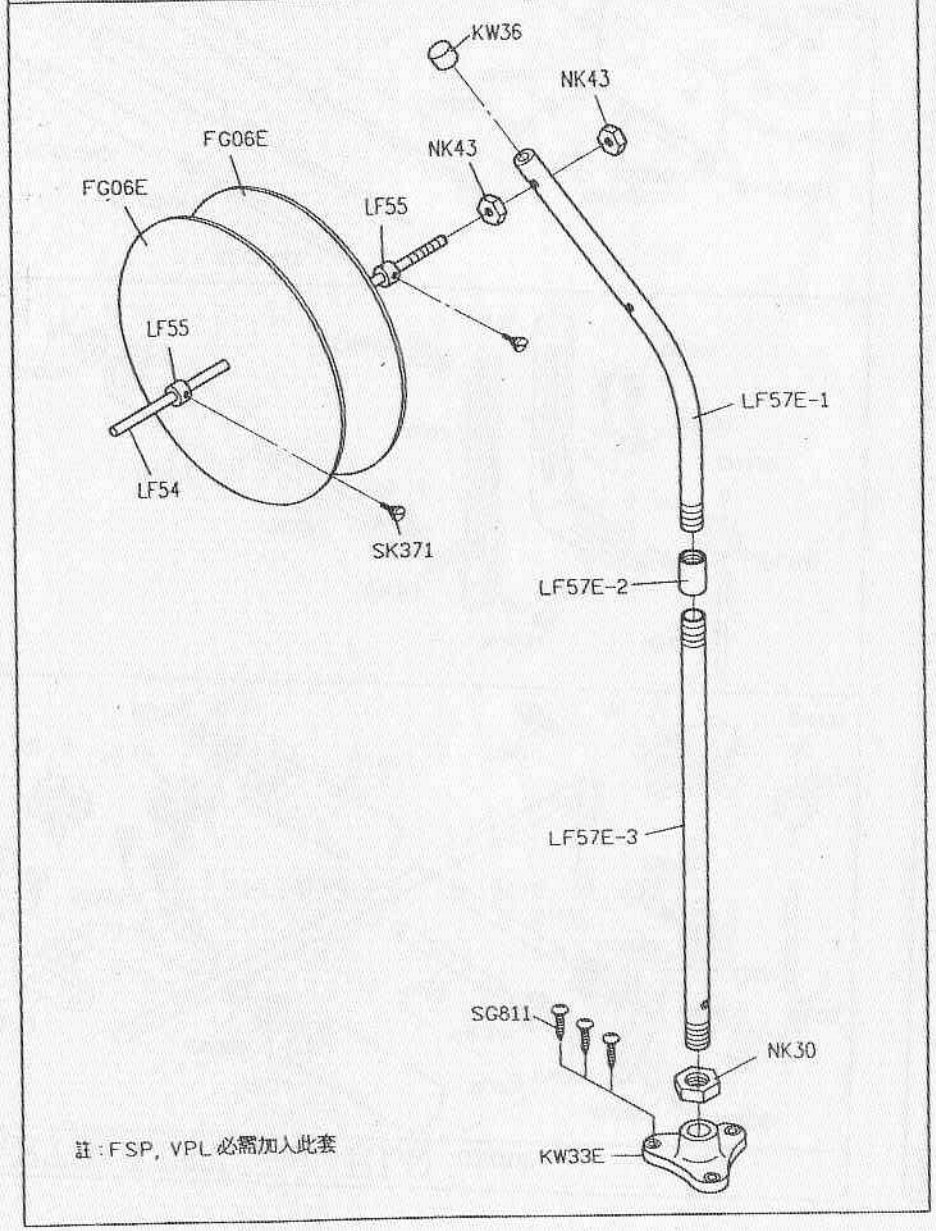

註：FSP, VPL 必需加入此套

PARTS LIST FOR UTP/UTQ (1) GROUP

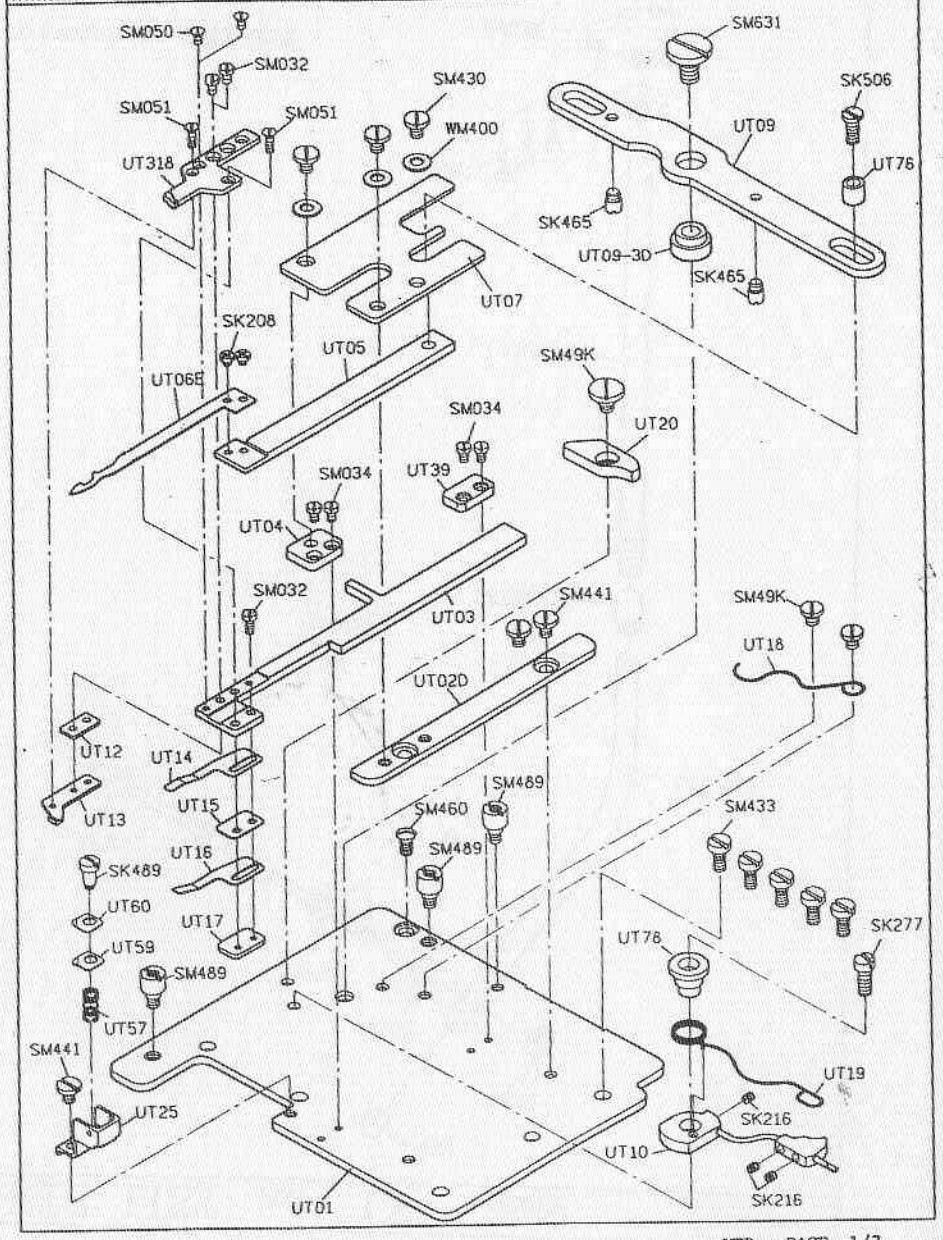

UTP PAGE 1/7
UTQ PAGE 1/6

PARTS LIST FOR UTP/UTQ (2) GROUP

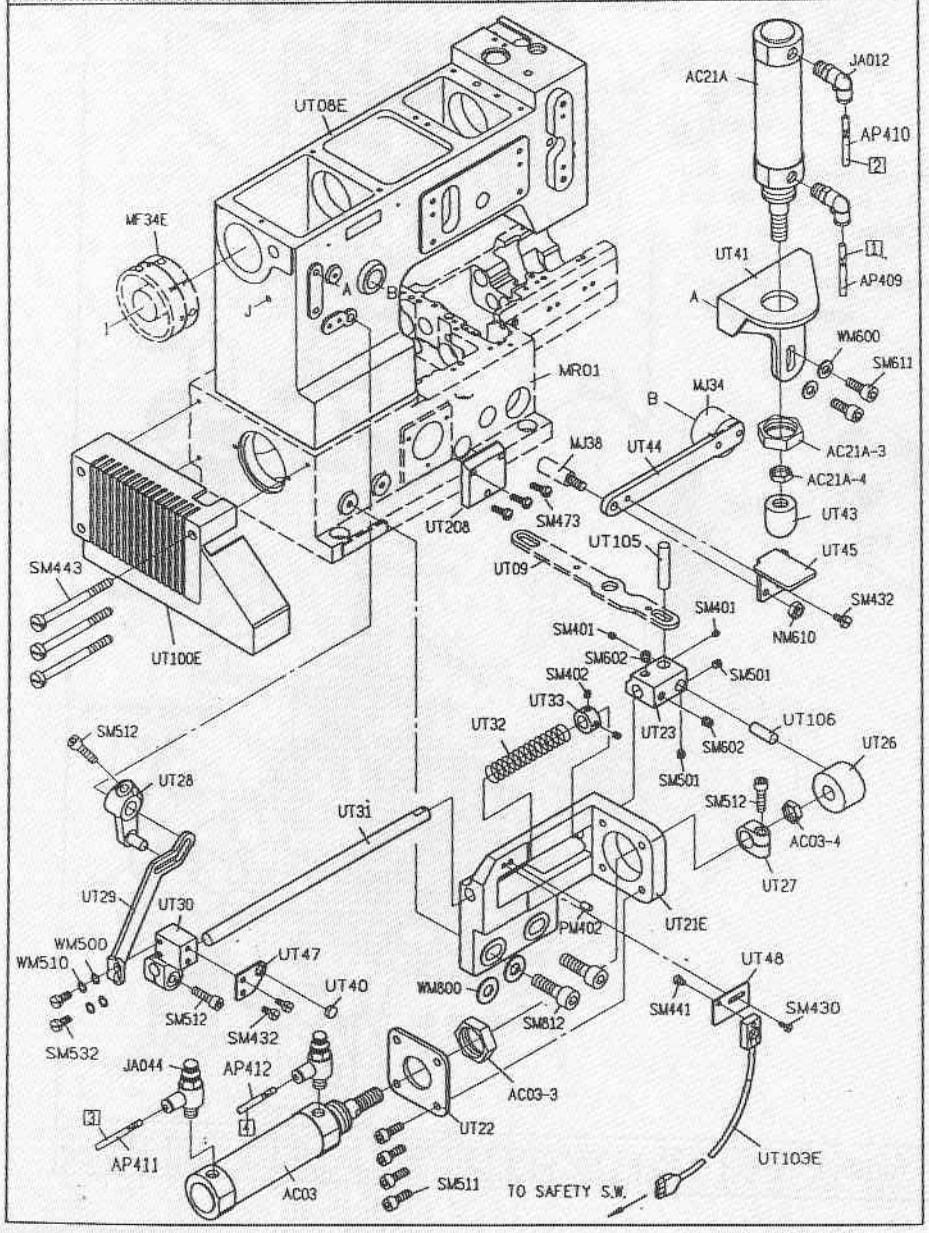

UTP PAGE 2/7
UTQ PAGE 2/6

PARTS LIST FOR UTP / UTQ (3) GROUP

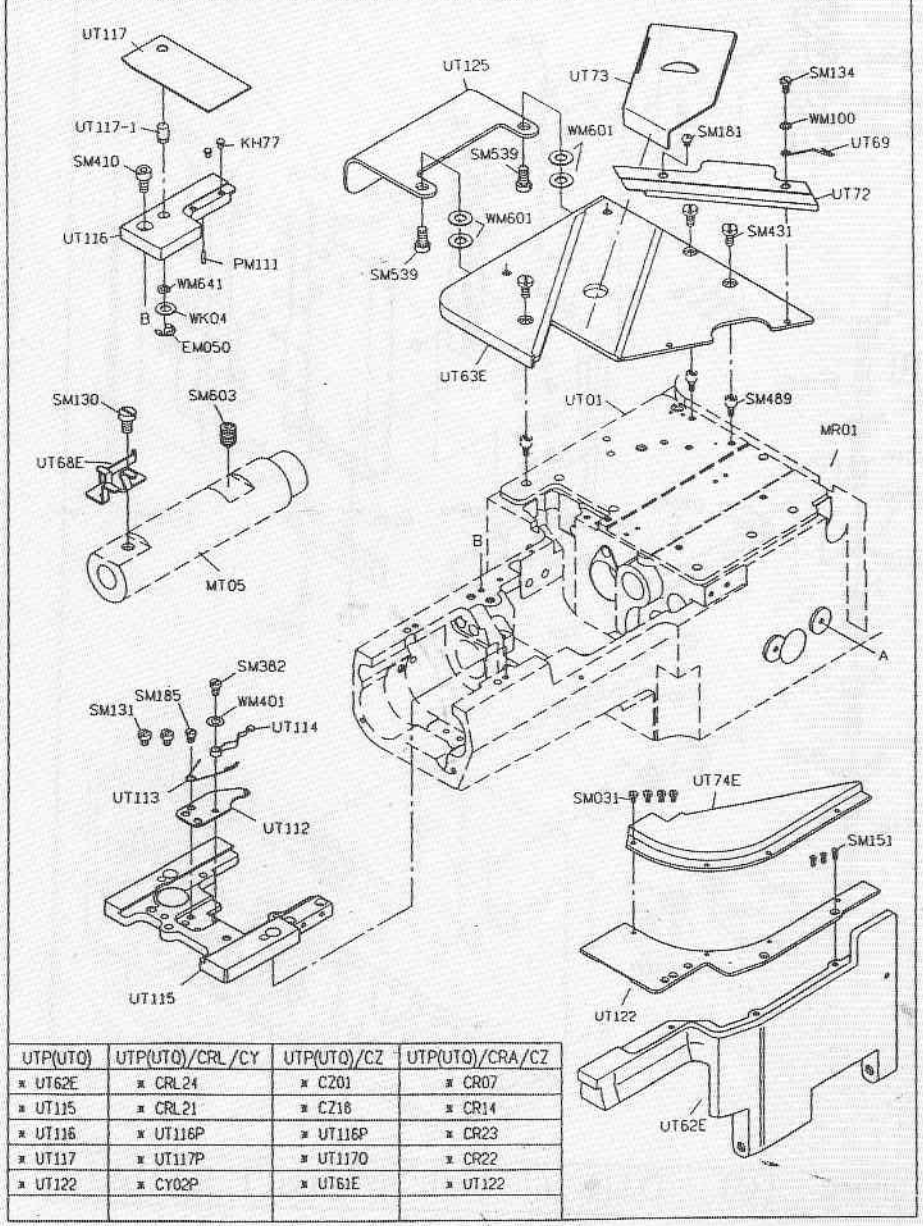

UTP(UTQ)	UTP(UTQ)/CRL/CY	UTP(UTQ)/CZ	UTP(UTQ)/CRA/CZ
* UT62E	* CRL24	* CZ01	* CR07
* UT115	* CRL21	* CZ16	* CR14
* UT116	* UT116P	* UT116P	* CR23
* UT117	* UT117P	* UT117O	* CR22
* UT122	* CY02P	* UT61E	* UT122

UTP PAGE 3/7
UTQ PAGE 3/6

PARTS LIST FOR UTP/UTQ (4) GROUP

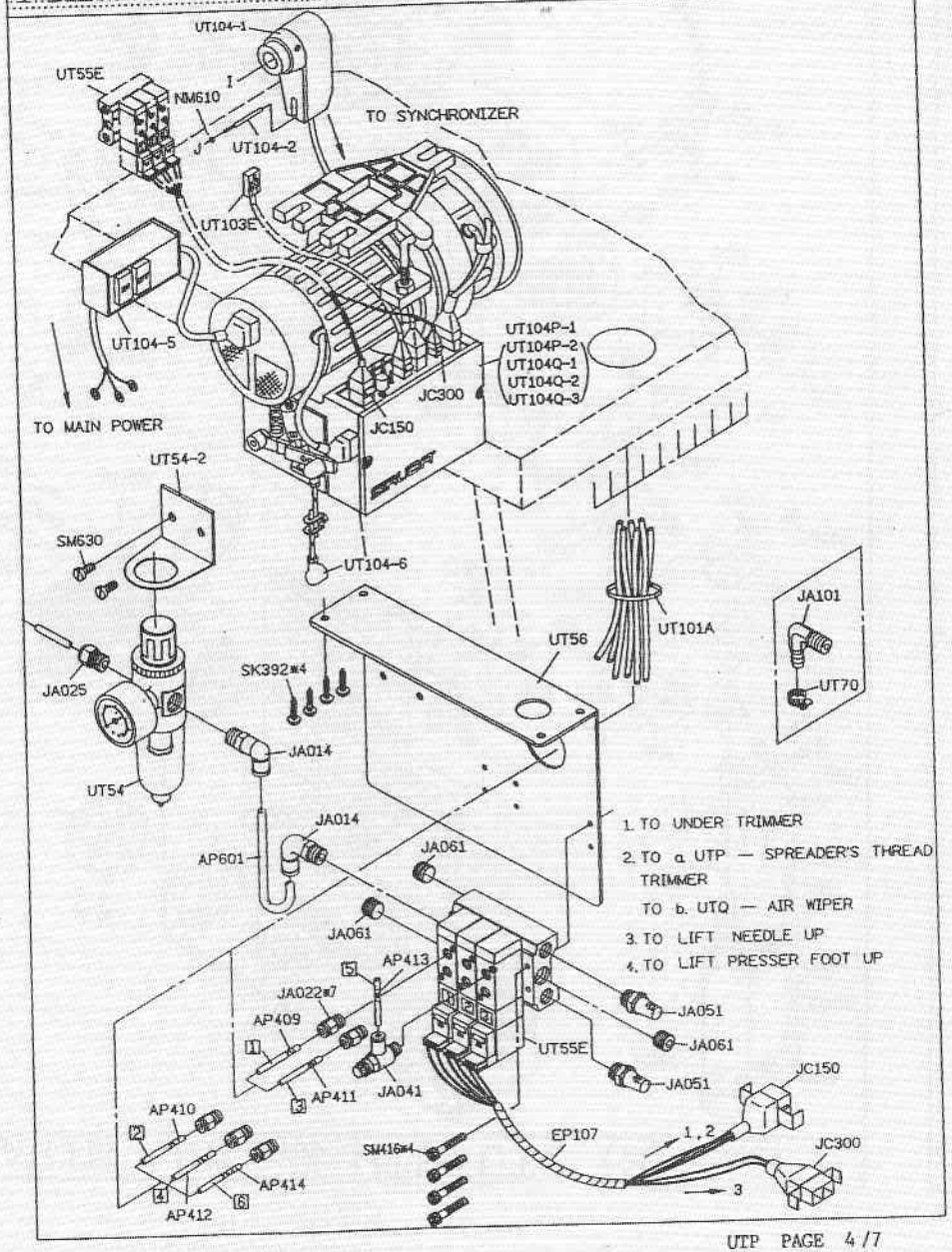

UTP PAGE 4/7
UTQ PAGE 4/6

PARTS LIST FOR UTP / UTQ (5) GROUP

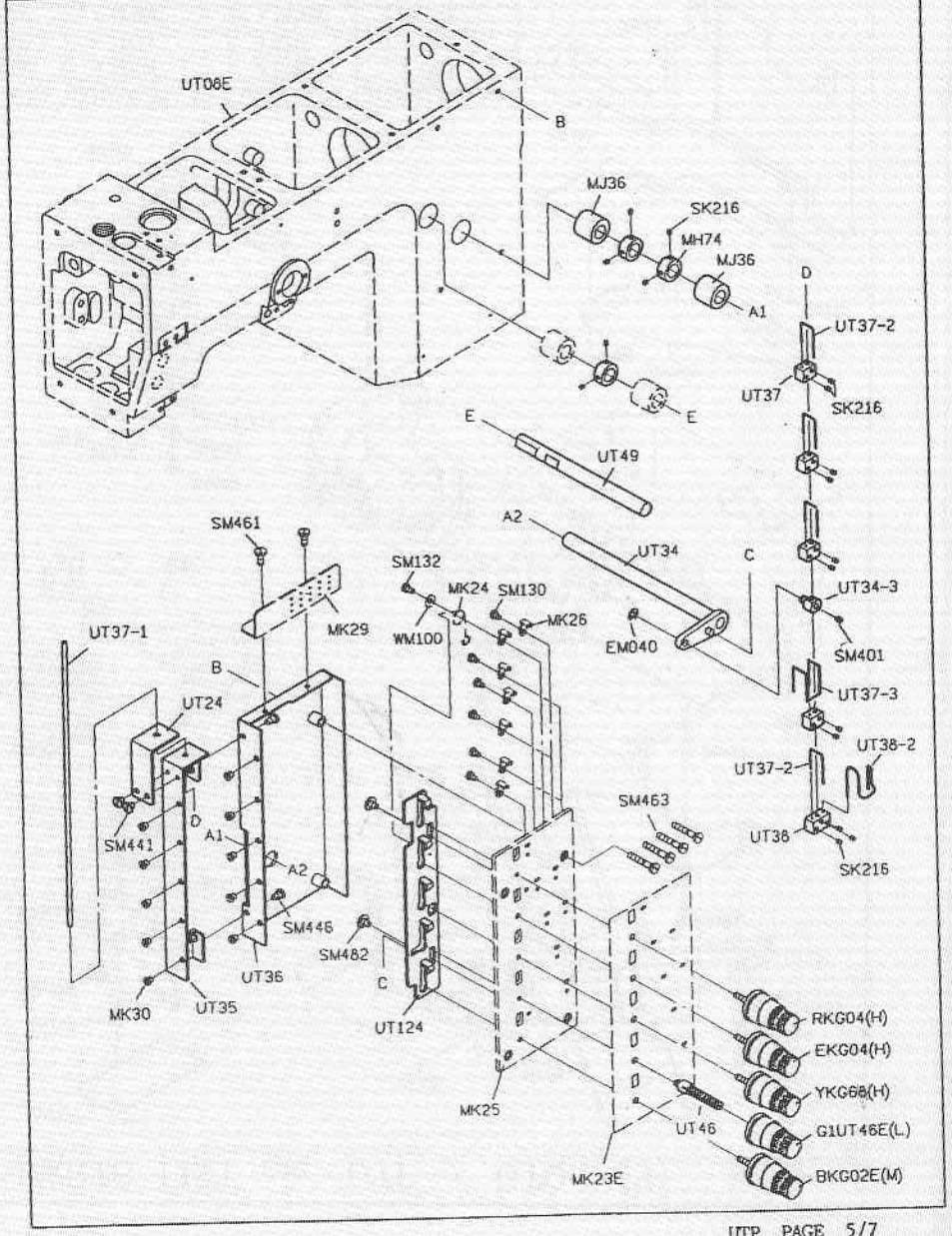

UTP PAGE 5/7
UTQ PAGE 5/6

PARTS LIST FOR UTP / UTQ (6) GROUP

UTQ 系列
FOR RIGHT SIDE

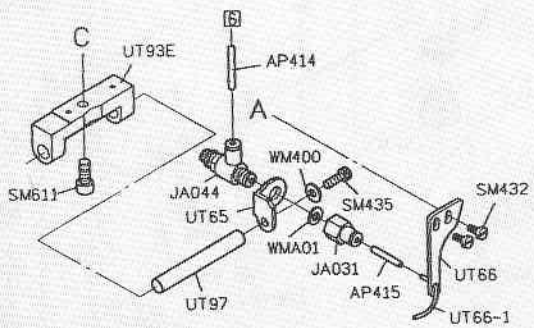

UTQ 系列
FOR LEFT SIDE

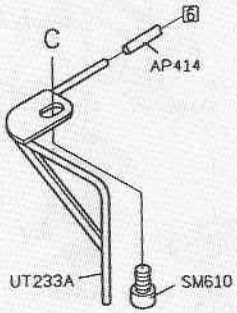

UTP 系列

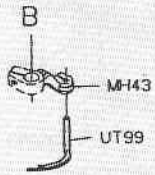

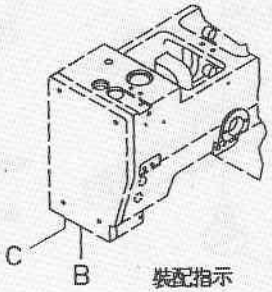

装配指示

PARTS LIST FOR UTP (7) GROUP

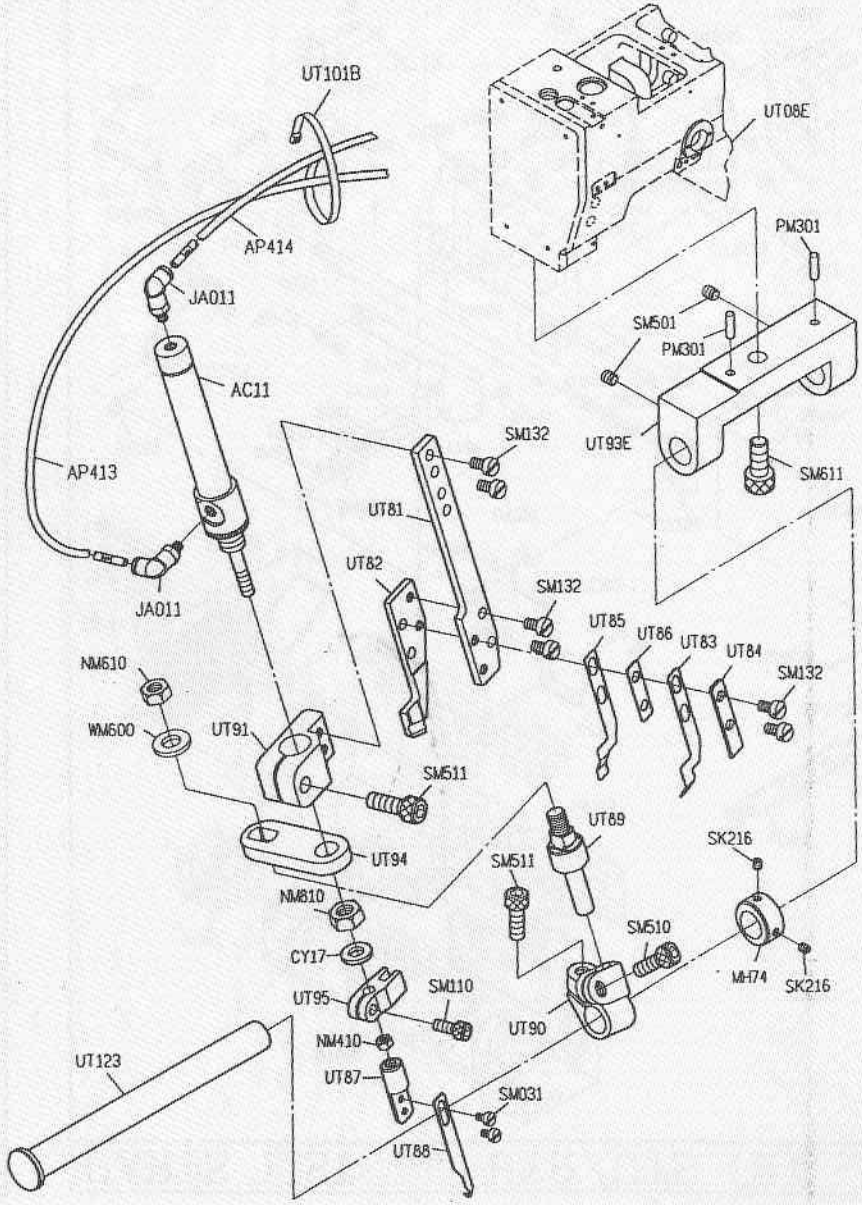

PARTS LIST FOR UTR / UTS (1) GROUP

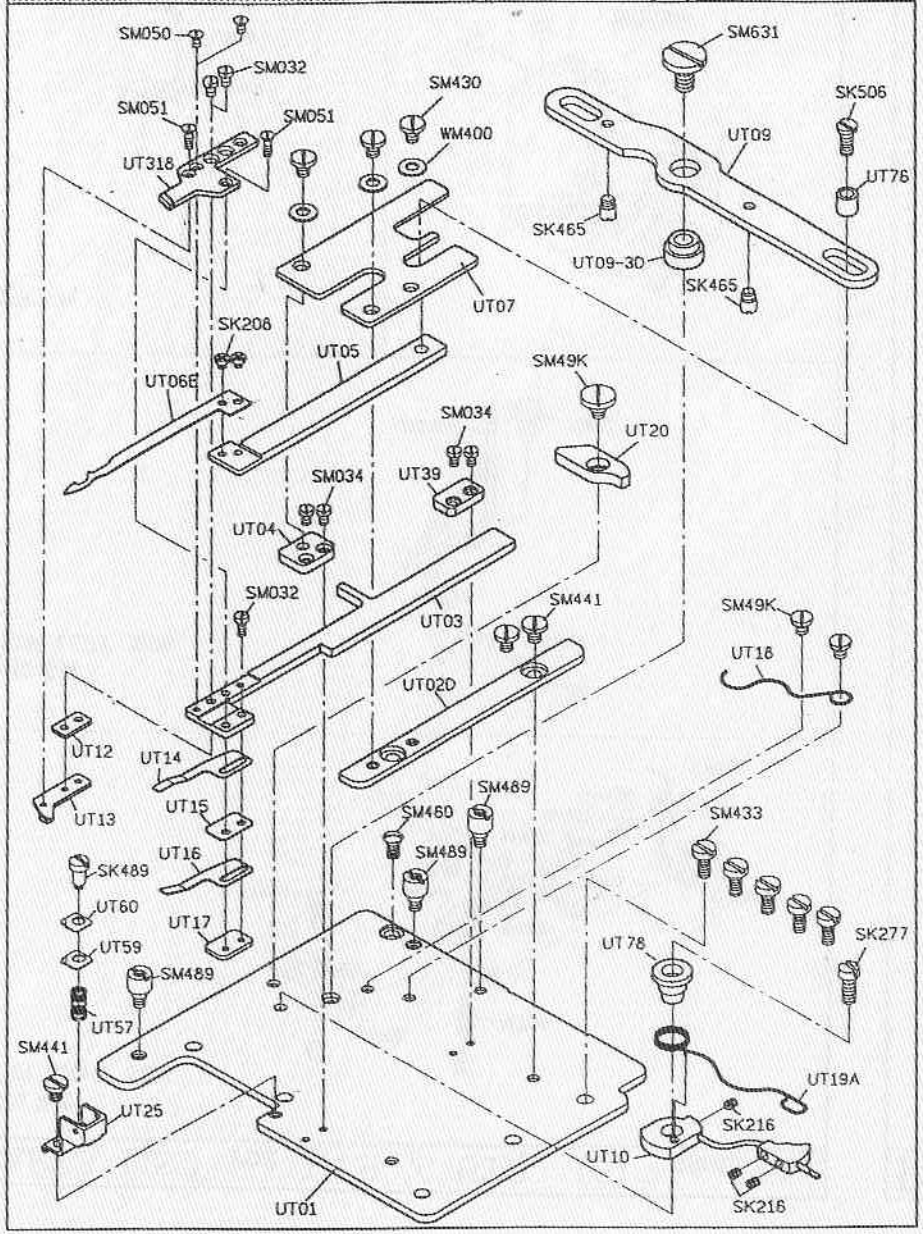

UTR PAGE 1/7
UTS PAGE 1/6

PARTS LIST FOR UTR/UTS (2) GROUP

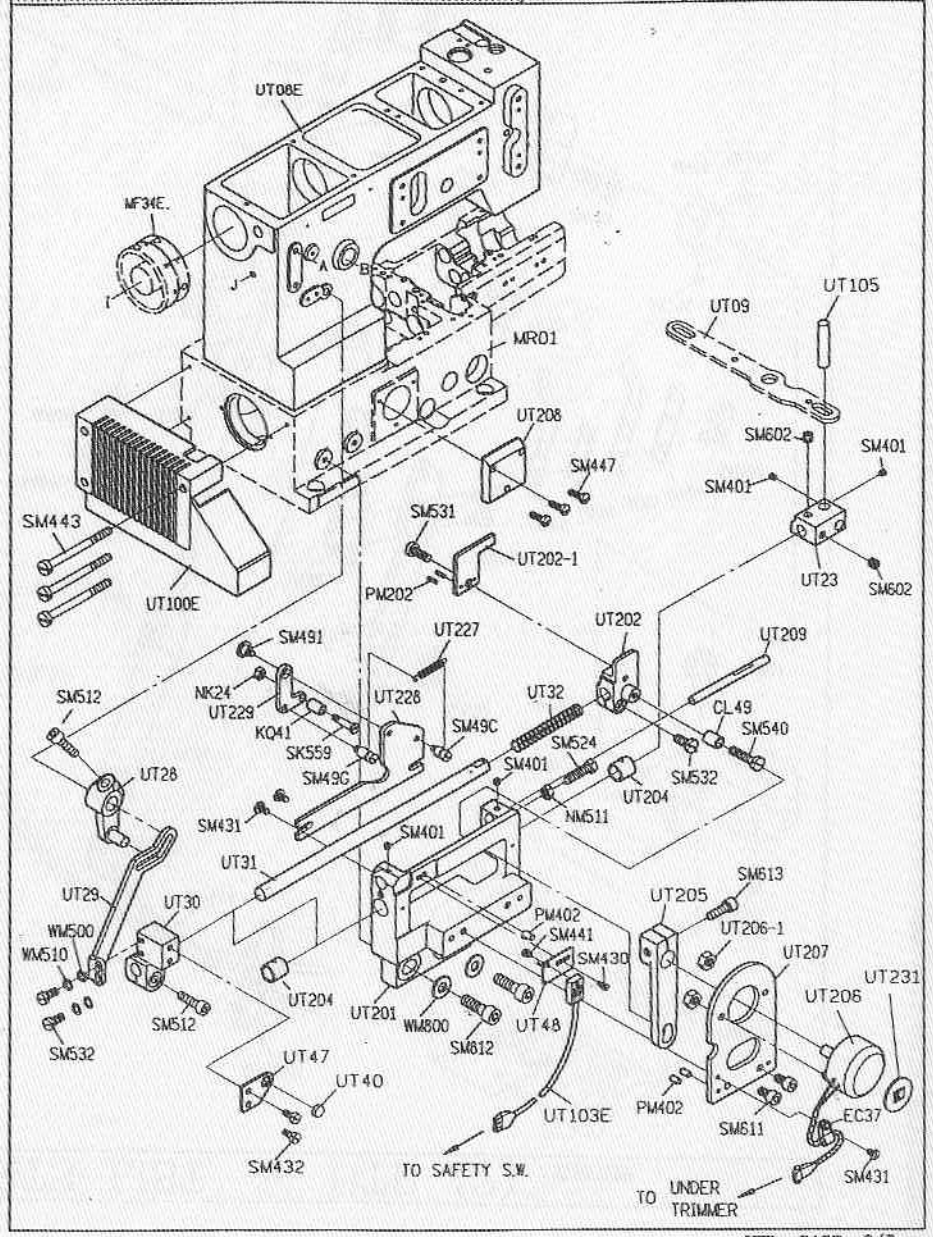

UTR PAGE 2/7
UTS PAGE 2/6

PARTS LIST FOR UTP-H(UTQ-H) GROUP 系 列 圖 1/7

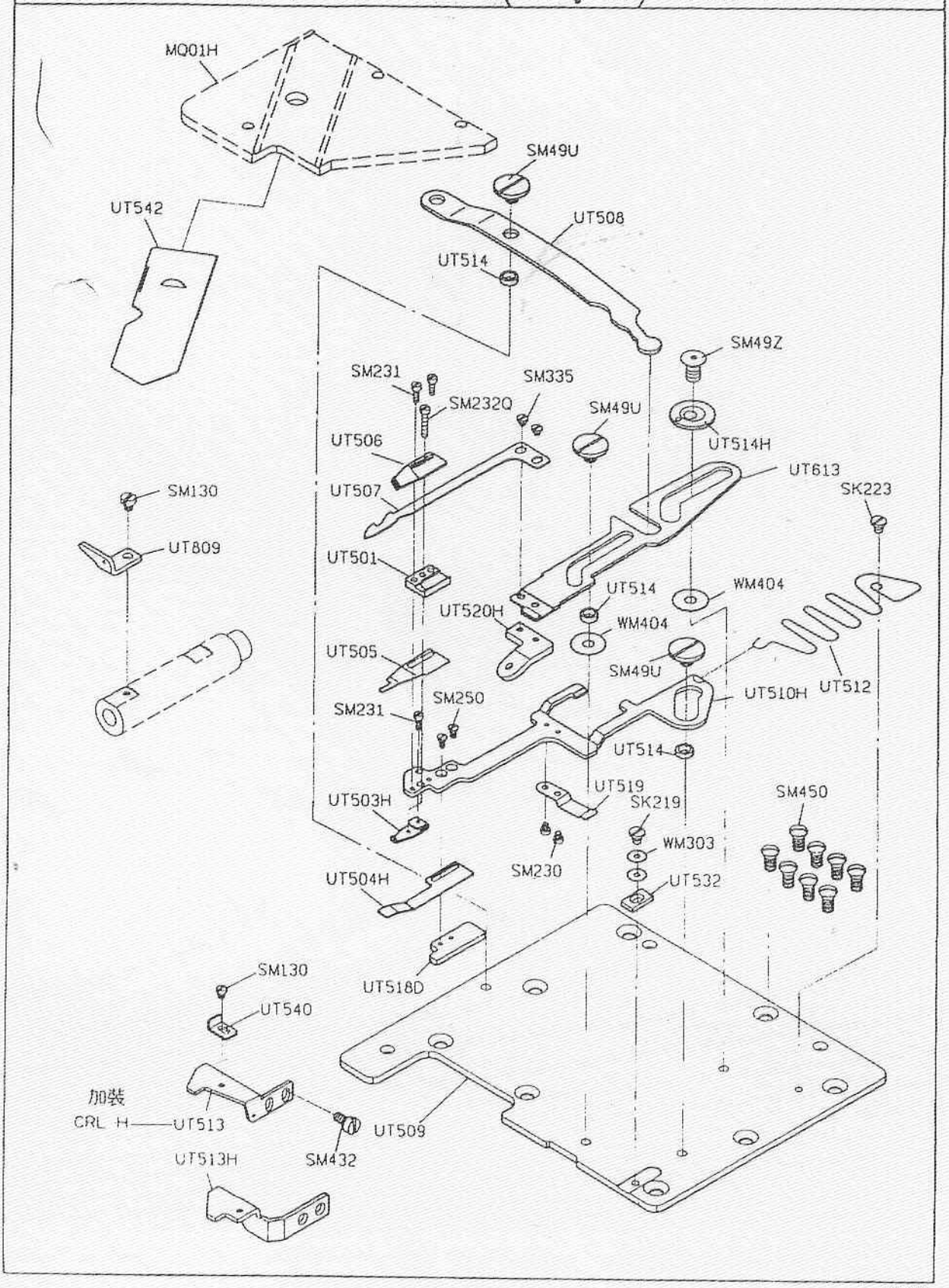

PARTS LIST FOR UTP-J(UTQ-J) GROUP P.1/15

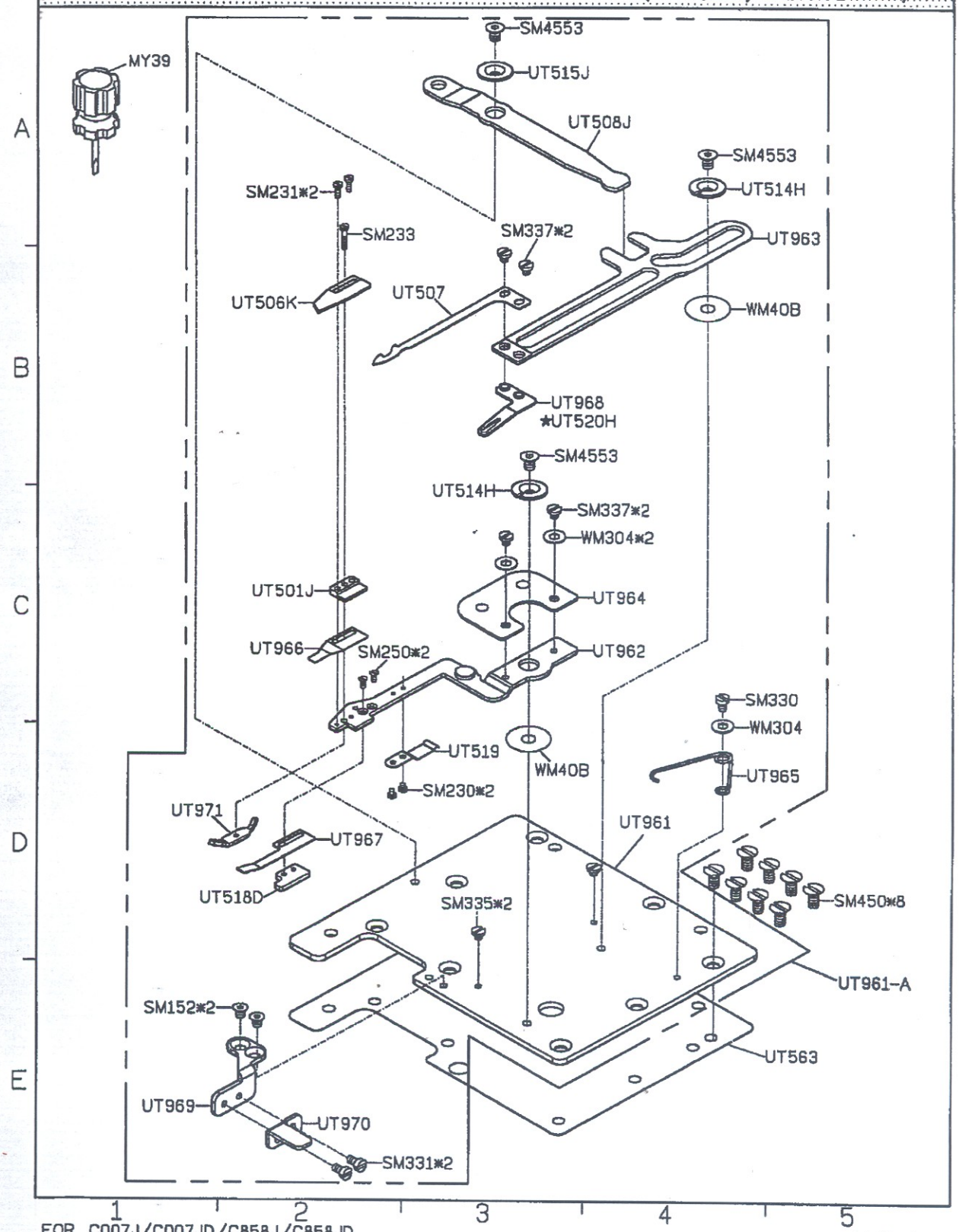

FOR C007J/C007JD/C858J/C858JD
★适用於UTP/CR/CX, UTQ/CR/CX, UTR/CR/CX, UTS/CR/CX車型

10/06/29

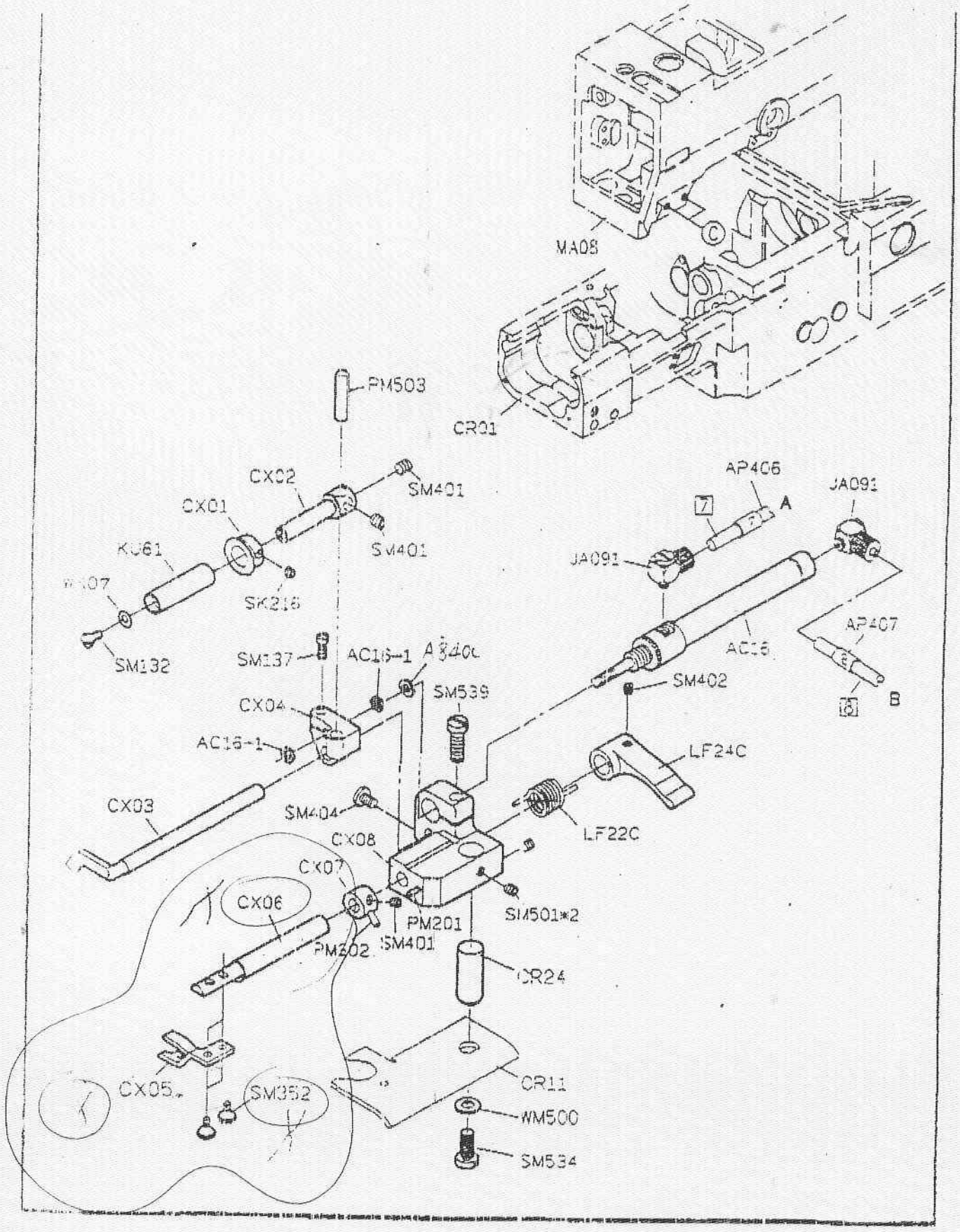
MA08
CR01
PM503
CX02
SM401
CX01
SM401
KU61
SK216
SM132
SM137
AC16-1
SM539
CX04
AC16-1
CX03
SM404
CX08
CX07
CX06
PM201
PM302
SM401
SM501*2
CR24
CX05
SM352
CR11
WM500
SM534
AP406
A
JA091
JA091
AC16
SM402
AP407
B
LF24C
LF22C

Cont.

85129

PARTS LIST FOR UTR / UTS (3) GROUP

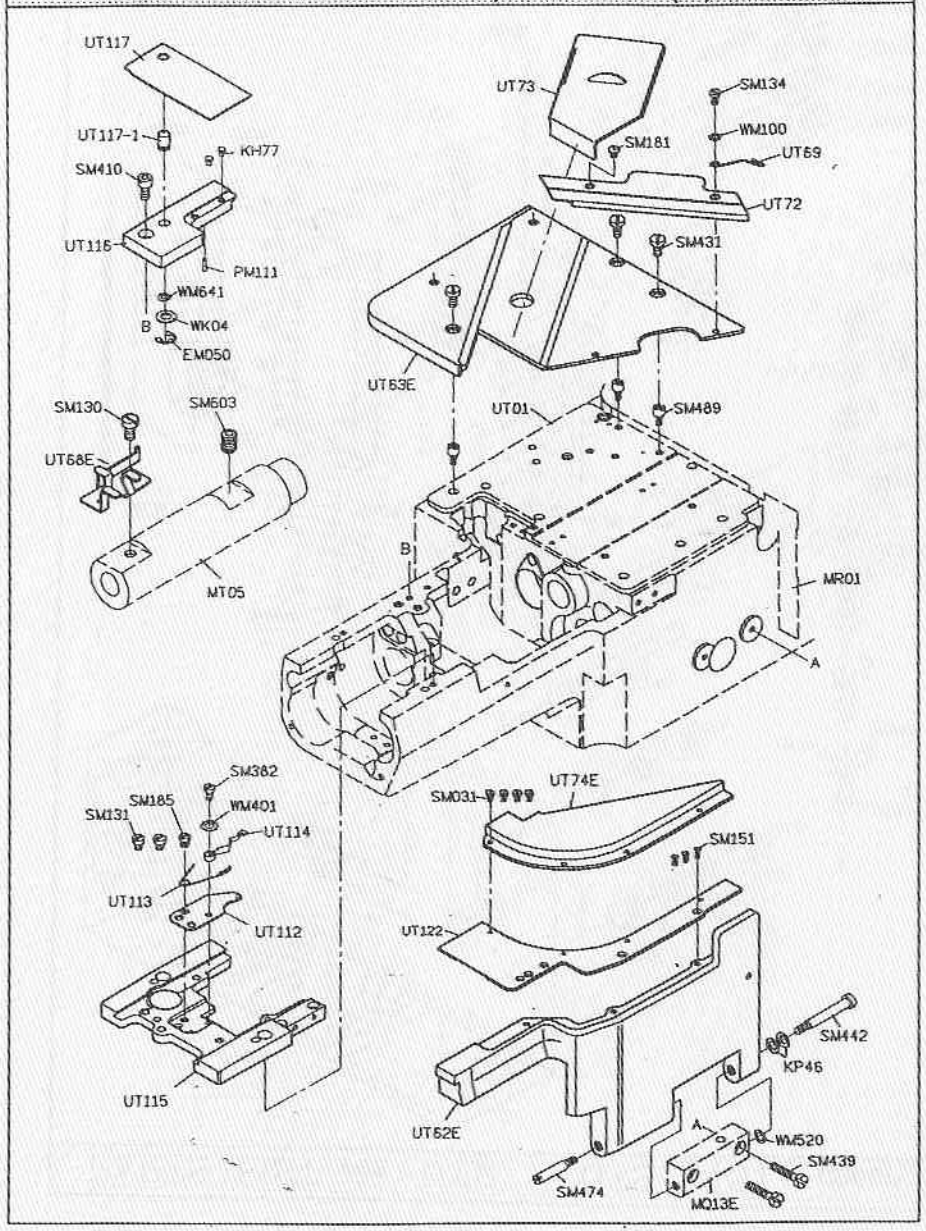

PARTS LIST FOR UTR/UTS (4) GROUP

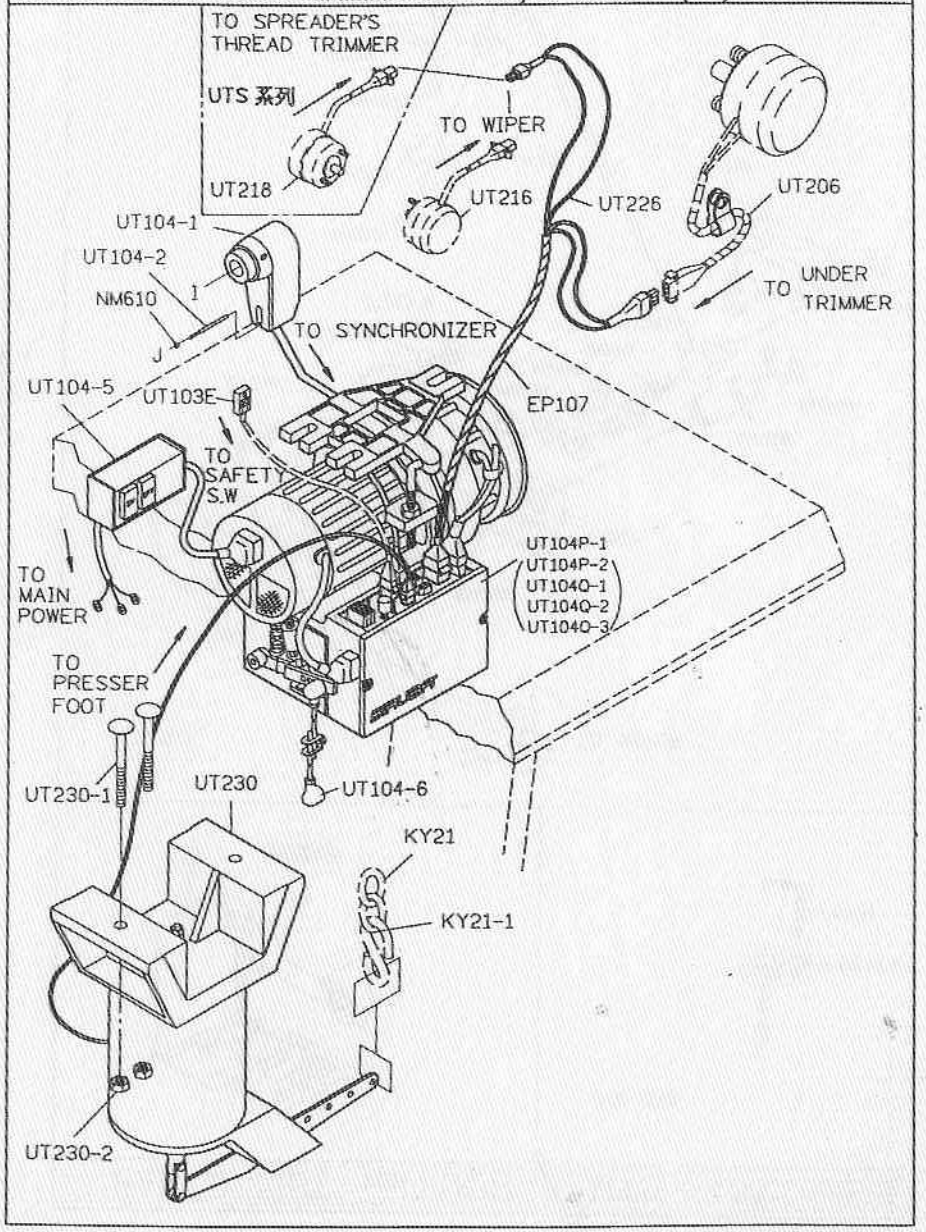

PARTS LIST FOR UTR / UTS (5) GROUP

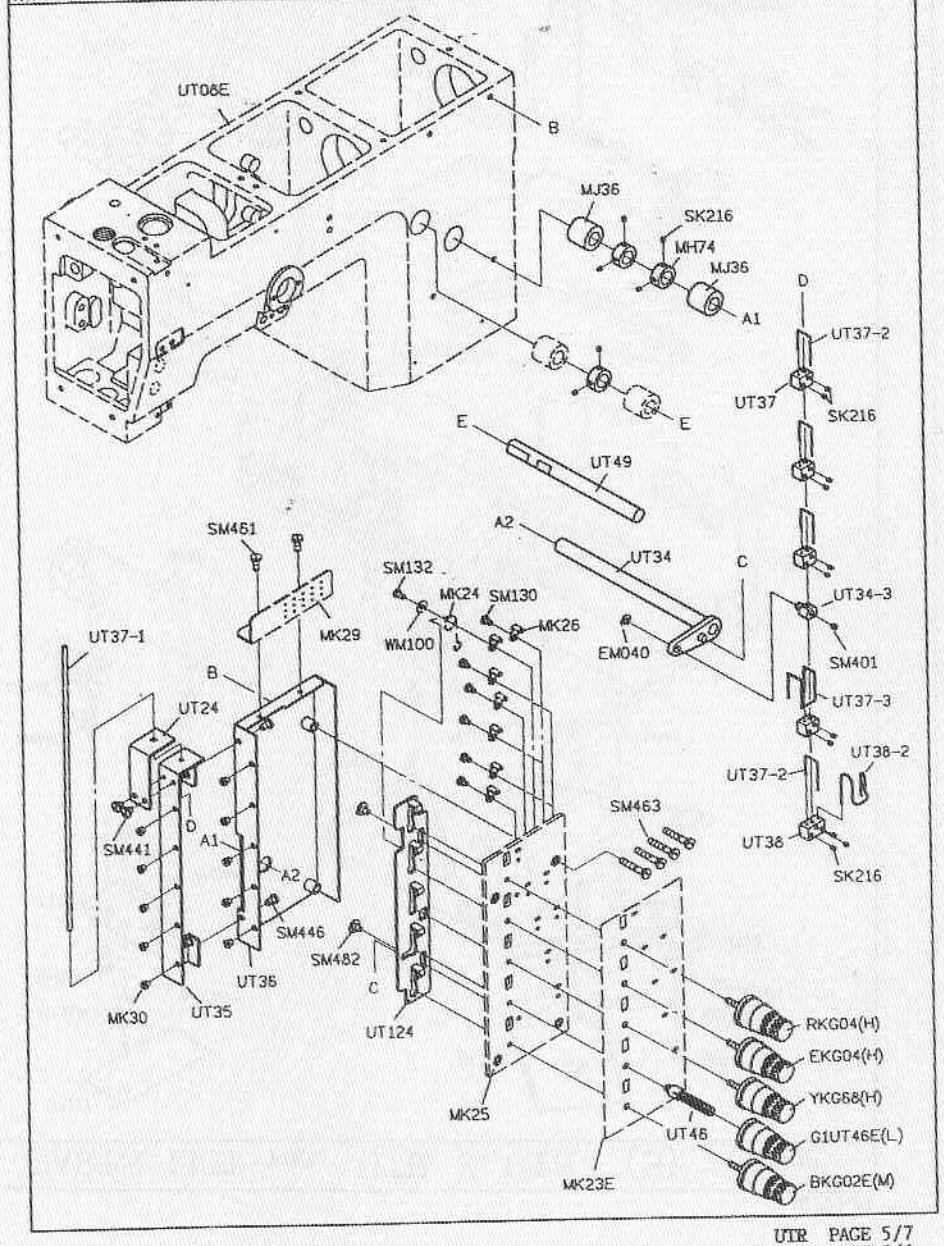

UTR PAGE 5/7
UTS PAGE 5/6

PARTS LIST FOR UTR / UTS (6) GROUP

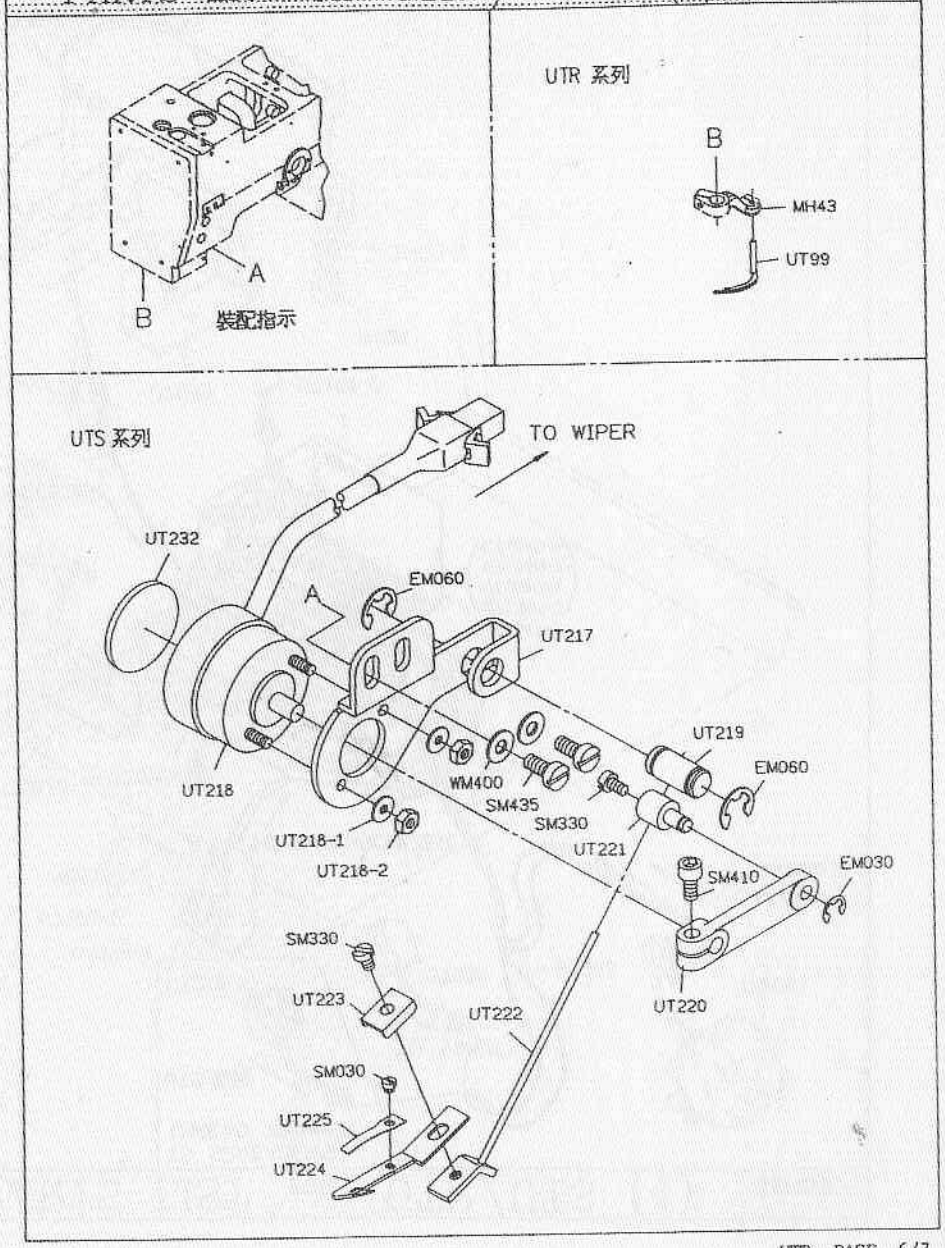

UTR PAGE 6/7
UTS PAGE 6/6
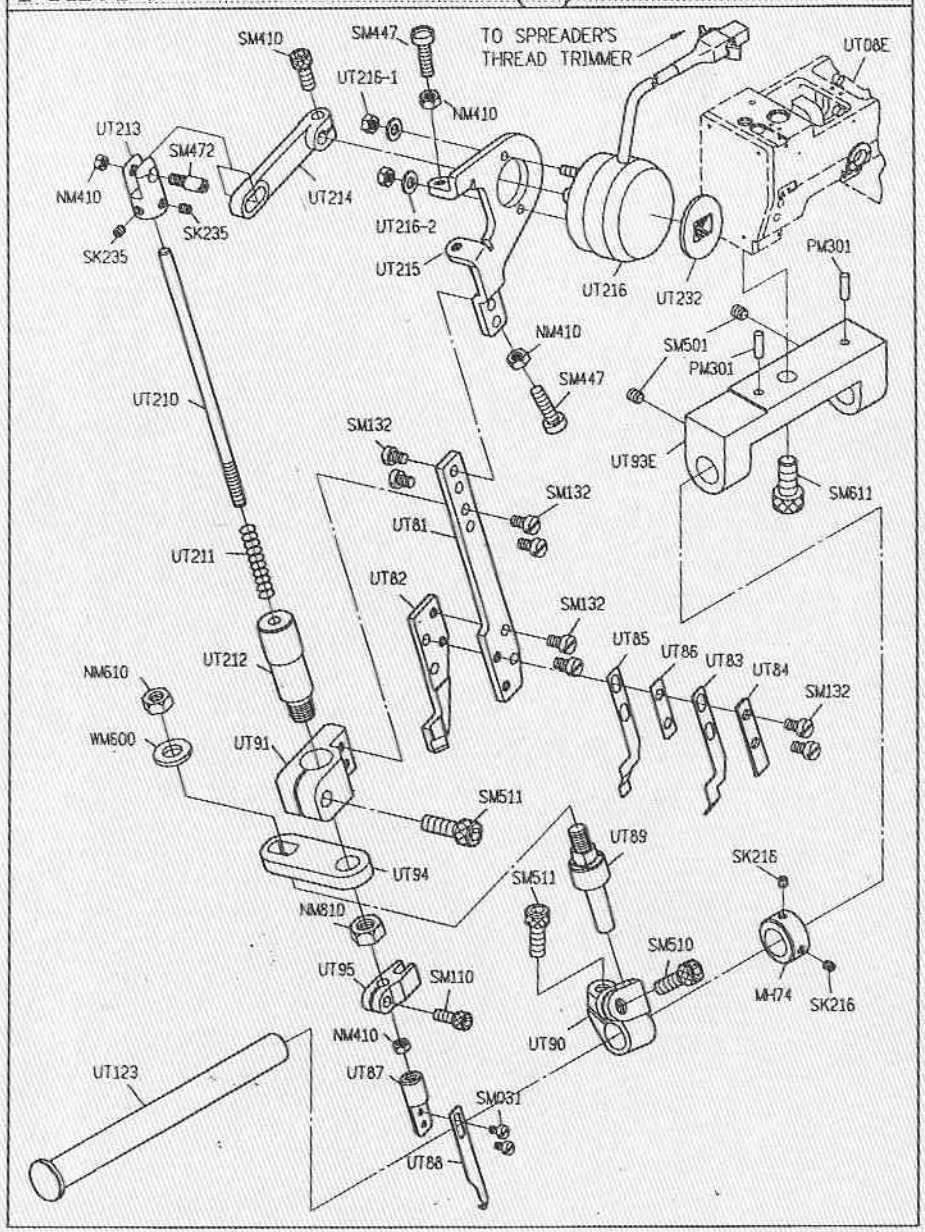
PARTS LIST FOR UTR(7) GROUP