PARTS LIST FOR BK GROUP

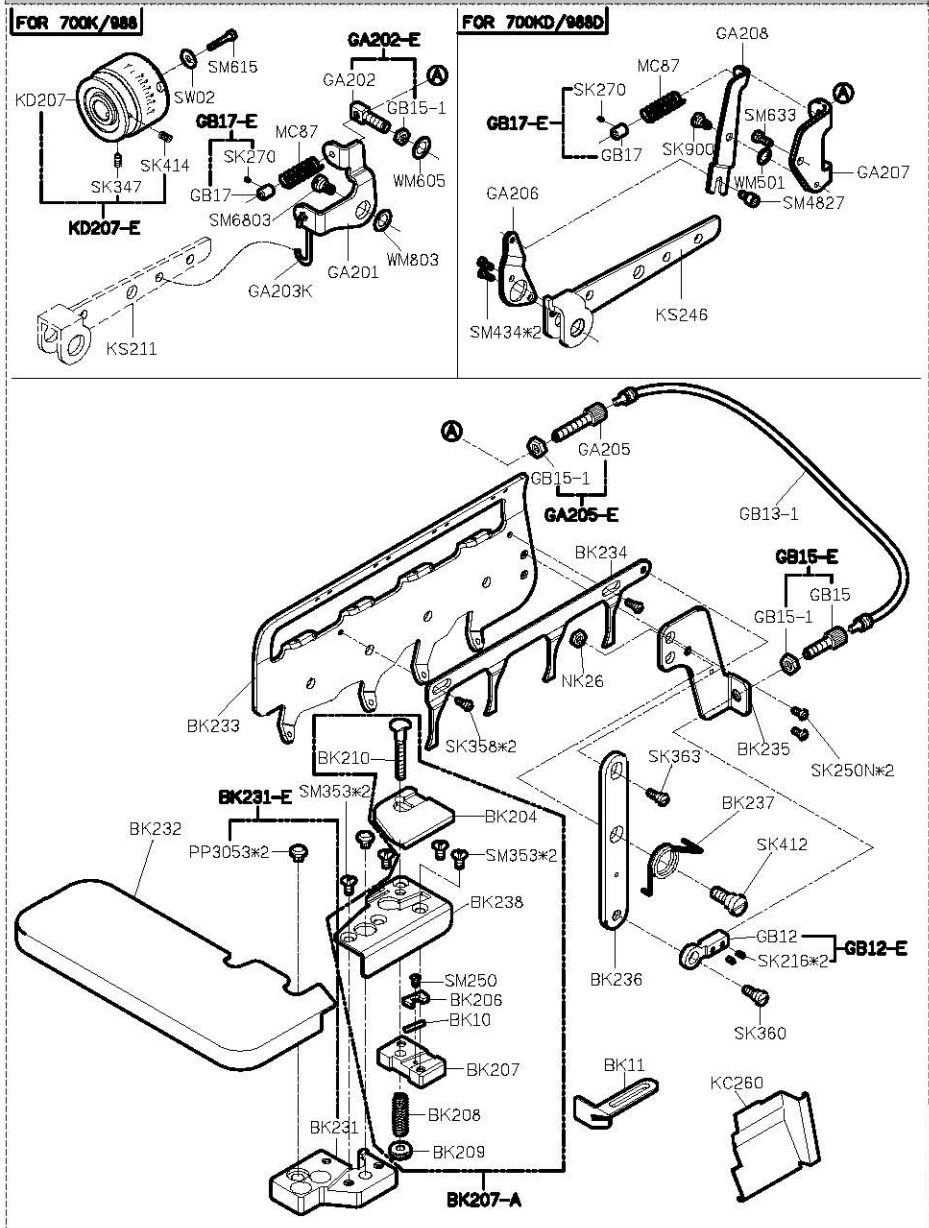

PARTS LIST FOR CT GROUP

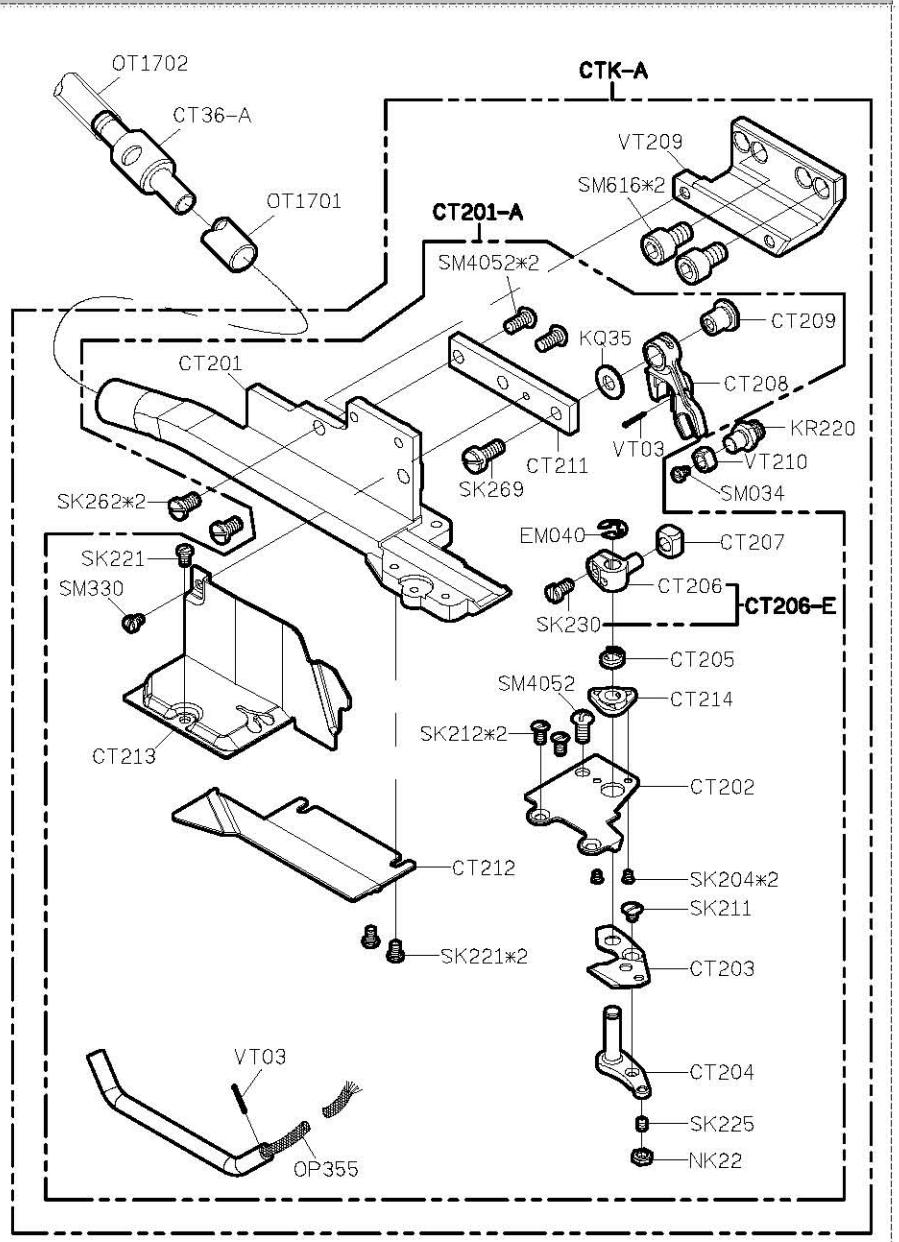

選配件：• 長切刀用

•EC208 (長切刀用)

長刀適用範圍	1 1/4 吋
短刀適用範圍	1 吋

MODEL	EC	EC+BK	EC+GA
PARTS NO	EC202	EC215	EC215
		EC216	EC216
	SK290	SK612	SK612

KA201E
*KA201M
KC26
CT45
SK233*2
SM616*2
EC205-A
SK221N*2
EC03
EC205
•EC205A(長切刀用)
EC04
EC11
SK221N
SK269
SK265
SK221N*2
EC07
•EC207 (長切刀用)
EC01
SK251*2
EC13
EC13-E
•EC02A-A (長切刀用)
EC02E-A
SM430*2
EC201
EC202
KN213
EC216
SW05*2
SK290*2
SK519
EC33
SK250N
EC206
SK295
SK266
EC31
SM616*2
KA204
CP102
SK250
EC203
SK230*2
SK250*2
EC206-A
EC35D-E
EC35D
EC35-1
EC36
EC26*2
EC25
EC21
SK260*2
EC24
EC27
EC48
SM341*2
EC27-A

選配件：FEC34-A

CY110
WM600*2
SK392*2
SM430*2
WM400*2
FEC34
3P

FE202-A

SM4837*4
FE212
NM410
WM411*2
FE209
FE210
FE219
FE213
FE202
SM4837*4
FE207
FE205-E
FE207-E
SM4061*2
FE218
SM453*2
FE201
ET106
NM410*2
WM411*2
FE221
SM4837*4
FE208
BQ19

PARTS LIST FOR EC-K (1) GROUP

PARTS LIST FOR EC-K (2) GROUP

PARTS LIST FOR EC-K (3) GROUP

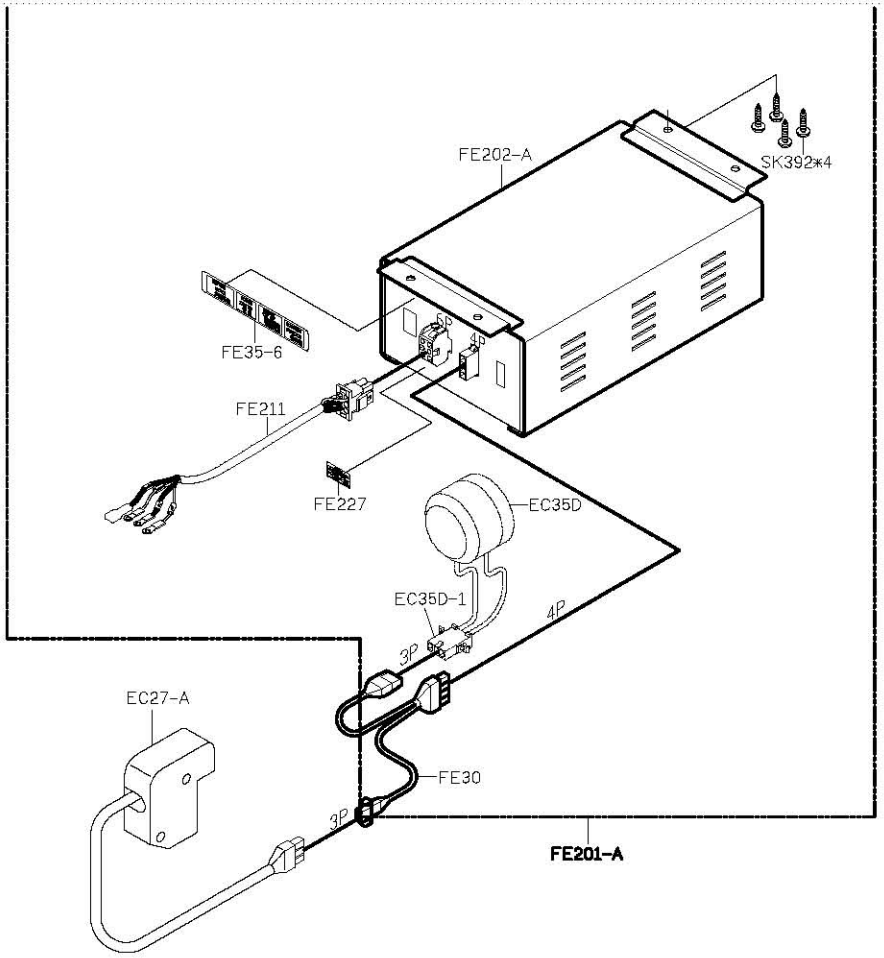

PARTS LIST FOR EC-K (4) GROUP

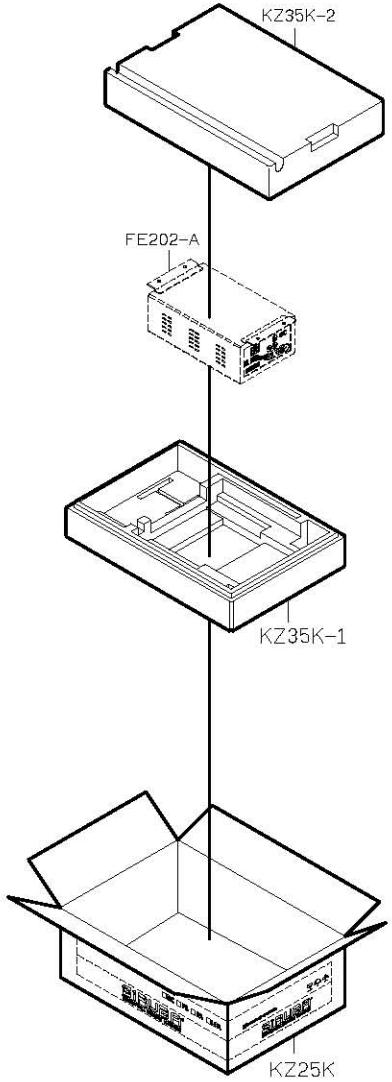

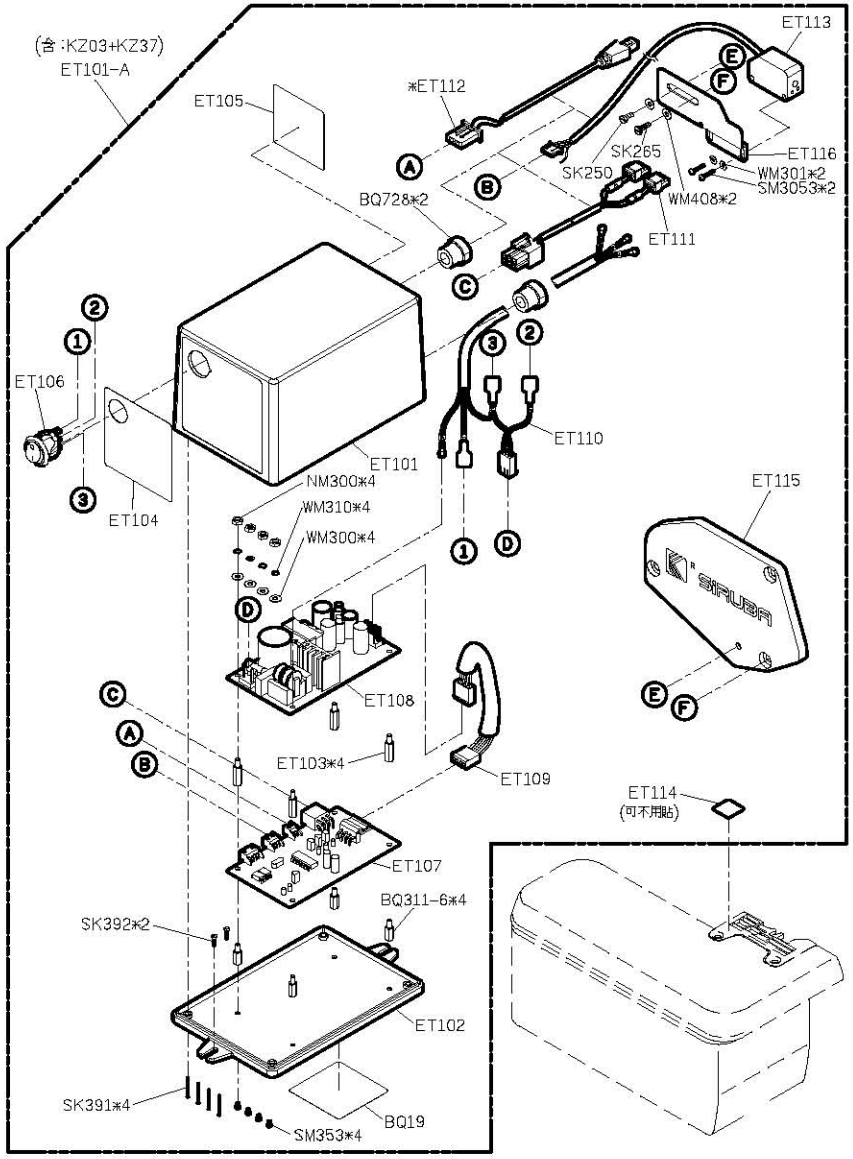

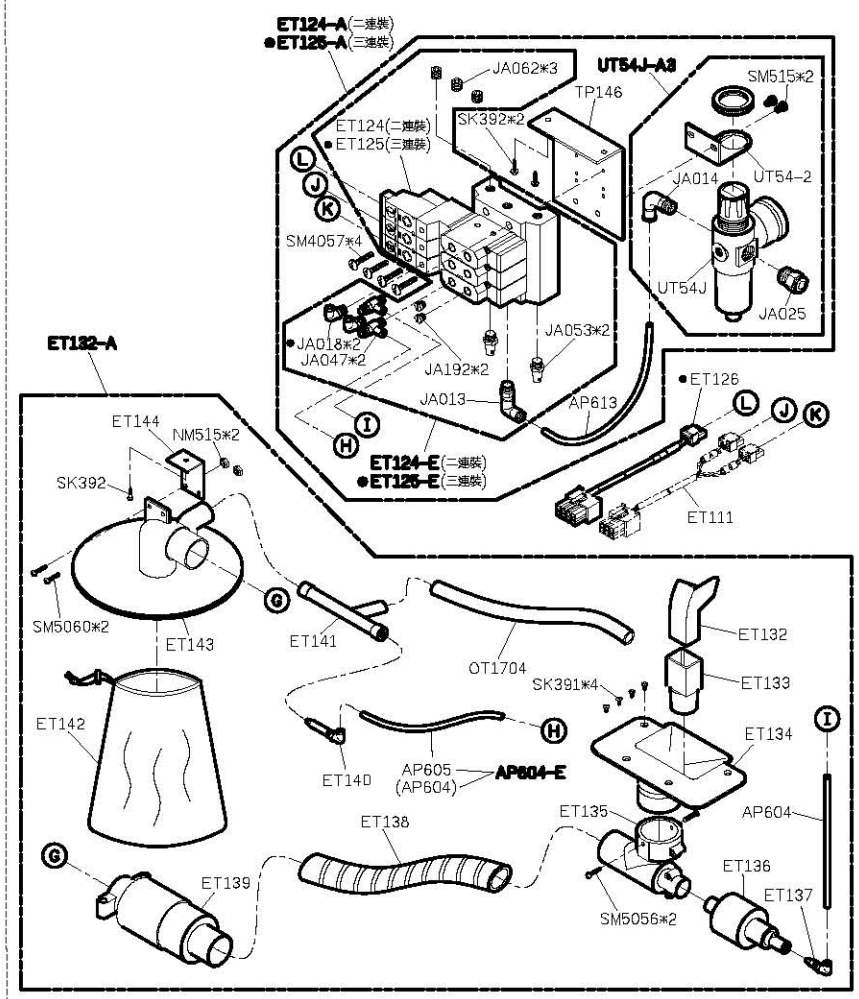

無自動抬壓腳	有自動抬壓腳
ET124	●ET125
	●ET126
	●JA018*2

PARTS LIST FOR ET-K (1) GROUP

PARTS LIST FOR ET-K (2) GROUP

PARTS LIST FOR ET-K (3) GROUP

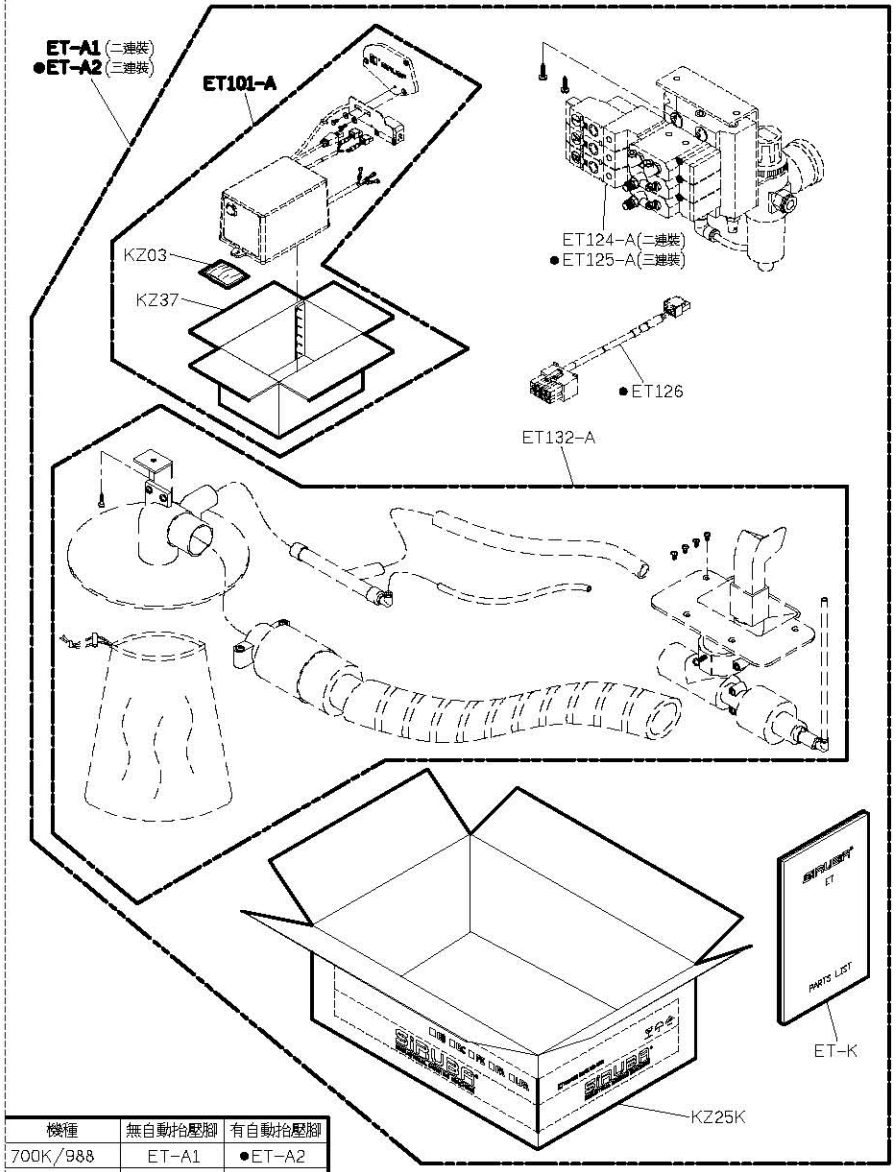

機種	無自動抬壓腳	有自動抬壓腳
700K/988	ET-A1	●ET-A2
700KD/988D	ET-A1	●ET-A2

PARTS LIST FOR ET-K1 (1) GROUP

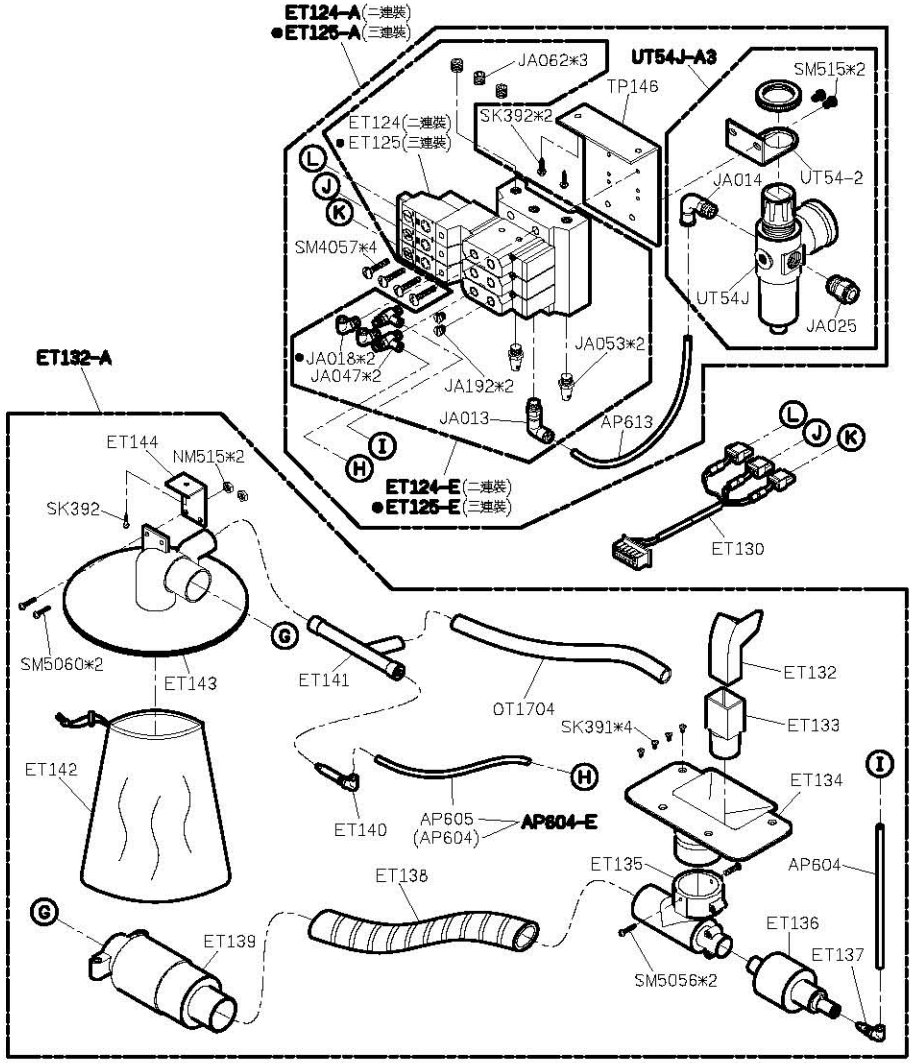

無自動抬壓腳	有自動抬壓腳
ET124	●ET125
	●JA018*2

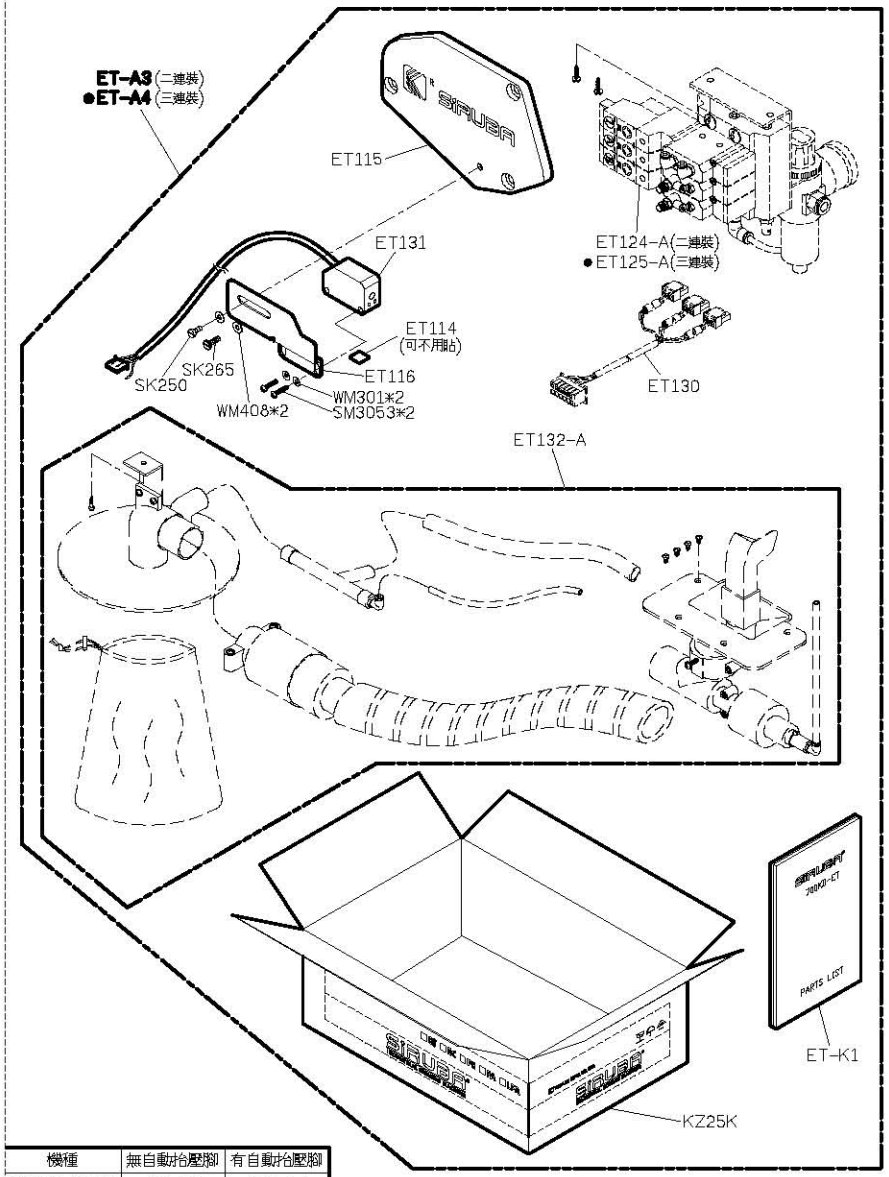

機種	無自動抬壓腳	有自動抬壓腳
700KD/988D	ET-A3	●ET-A4

MODEL	BK/GA	其 他
PARTS NO	KS248	KS249
	KS248-A	KS249-A
	FLP-1B	FLP-1A
	FLP-1 調整用	

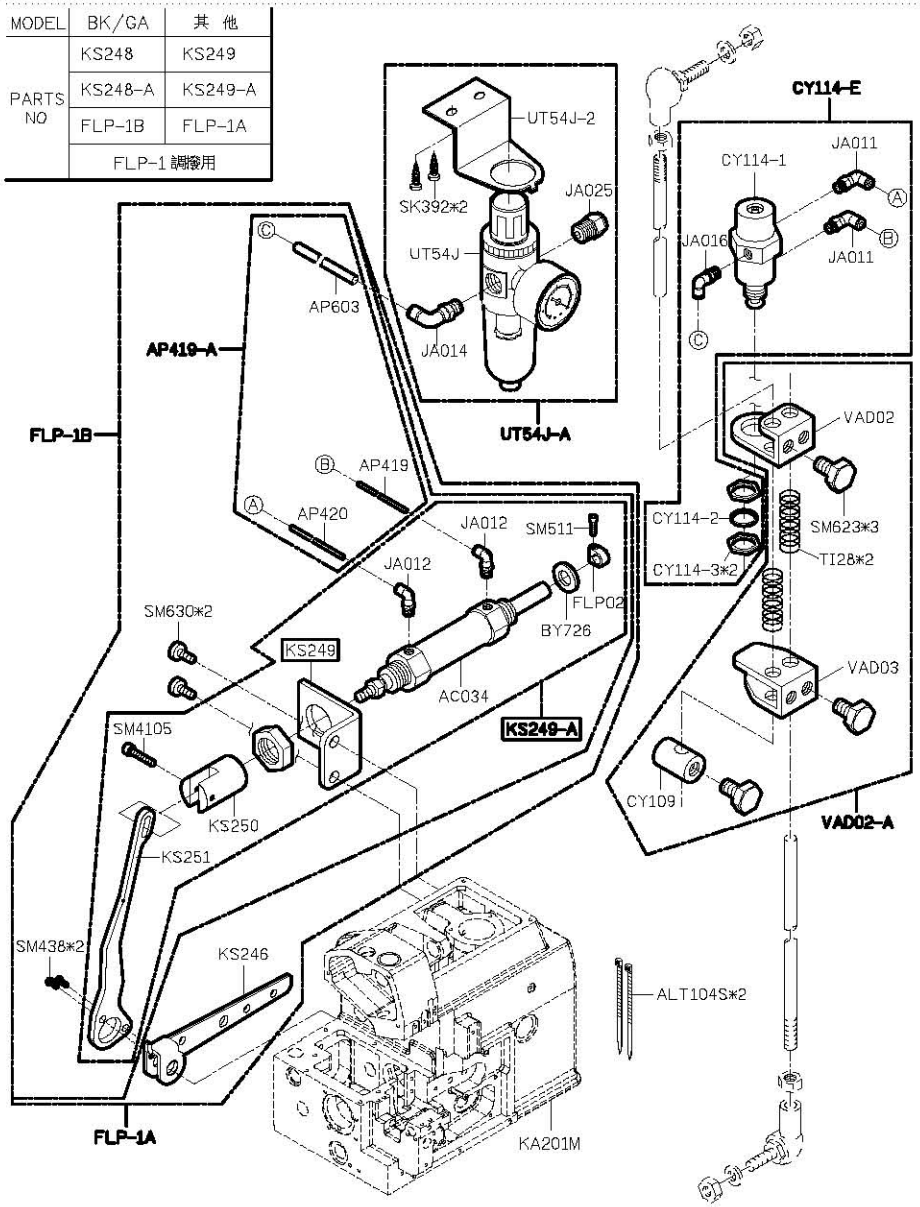

PARTS LIST FOR ET-K1 (2) GROUP

PARTS LIST FOR FLP-1 GROUP

PARTS LIST FOR KA GROUP

MODEL	700K/KD	988/988D
PARTS NO	KC230	KC231

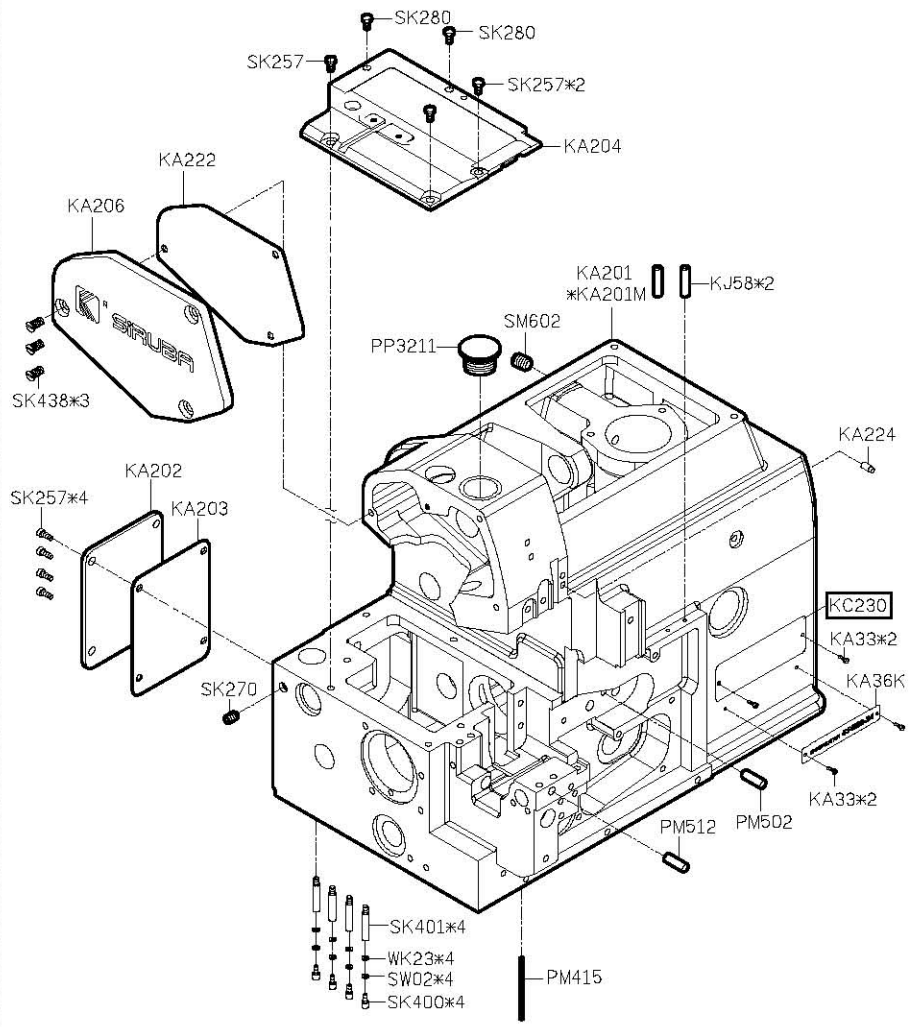

PARTS LIST FOR KB GROUP

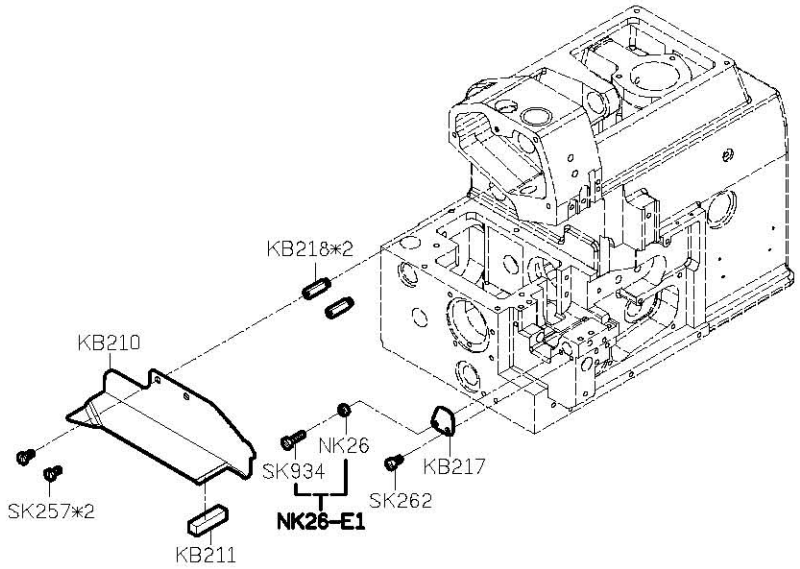

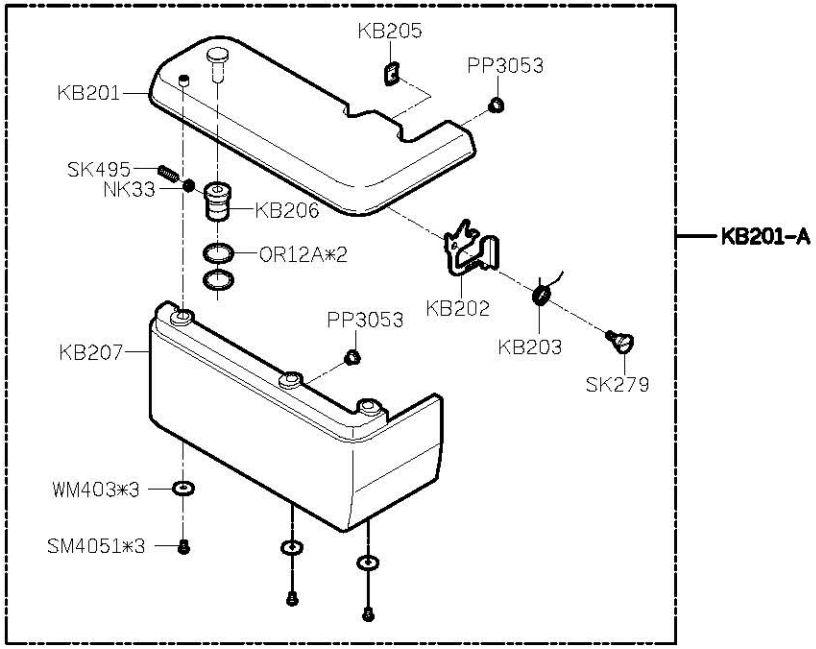

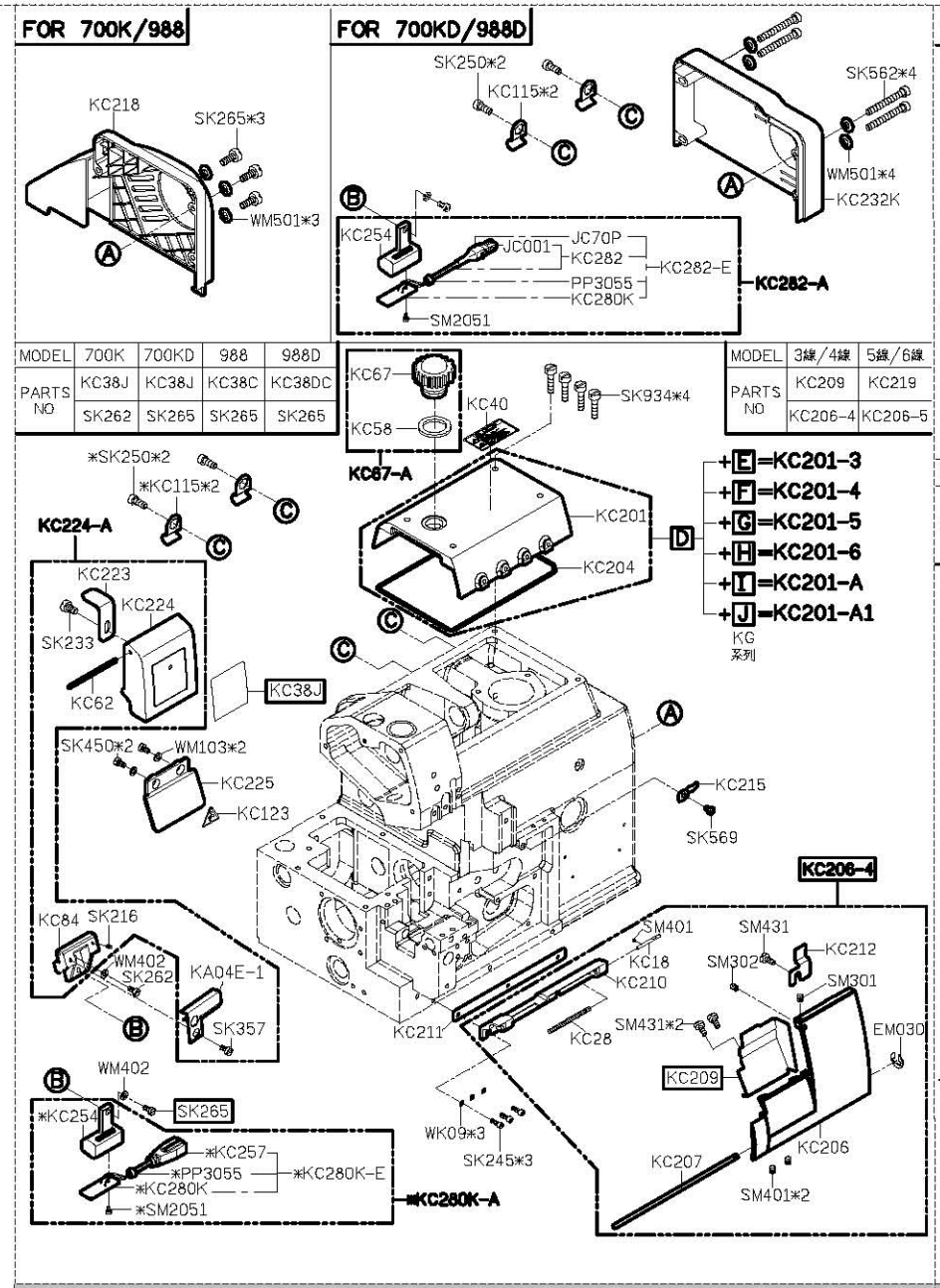

MODEL	700K	700KD	988	988D
PARTS NO	KC38J	KC38J	KC38C	KC38DC
	SK262	SK265	SK265	SK265

MODEL	3線/4線	5線/6線
PARTS NO	KC209	KC219
	KC206-4	KC206-5

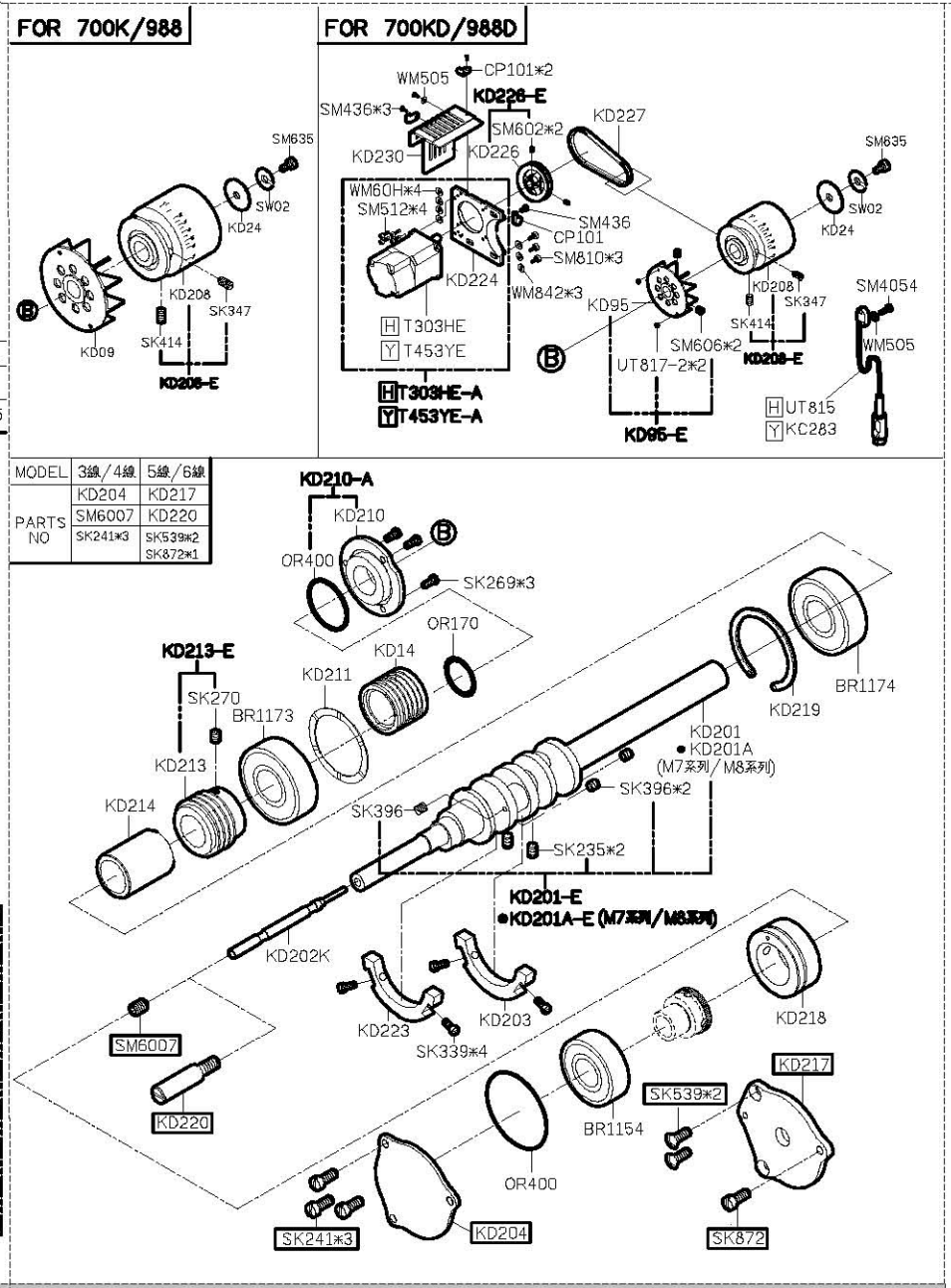

MODEL	3線/4線	5線/6線
PARTS NO	KD204	KD217
	SM6007	KD220
	SK241*3	SK539*2
		SK872*1

PARTS LIST FOR KC GROUP

PARTS LIST FOR KD GROUP

PARTS LIST FOR KF GROUP

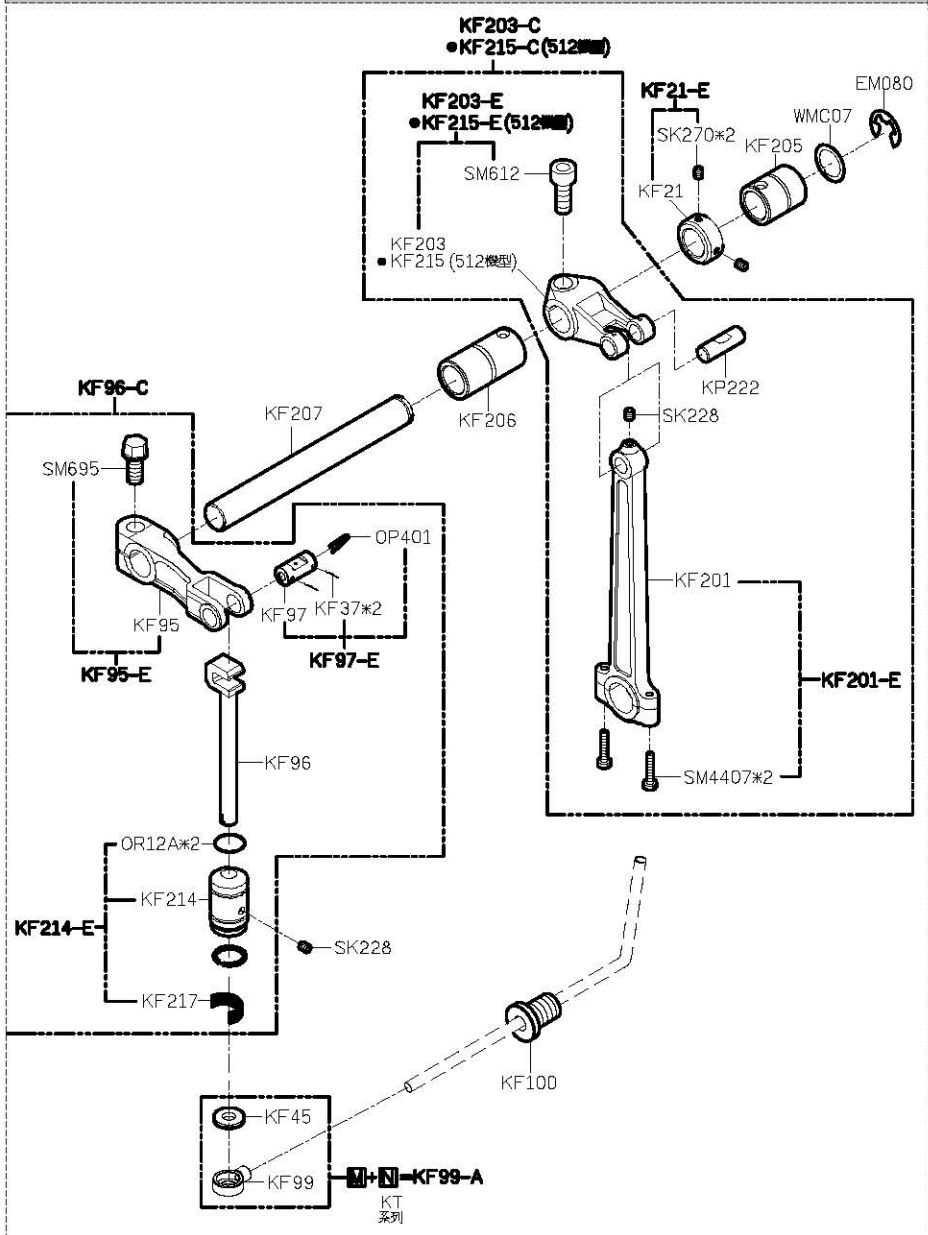

PARTS LIST FOR KG GROUP

MODEL	3線	4線	5線	6線
PARTS NO	KG233	KG211	KG233	KG211
	KG248	KG213	KG236	KG249
	KG250	KG221	KG243	KG251
	KG222	KG222	KG245	KG245
	KG225	KG225	KG261	KG261
	KG201	KG201	KG244	KG244
	KG93	KG92	KG94	KG94
	SK216	SK216	SK216*2	SK216*2
	SK250N	SK250N	SK250N*2	SK250N*2
	SK437N	SK437N	SK437 SK221N	SK437 SK221N
	SM251	SM251	SM250	SM250
	KG212-3	KG212-4	KG241-5	KG241-6
	KG223-4	KG223-4	KG223-5	KG223-5

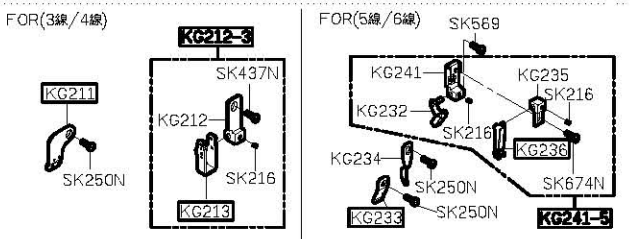

MODEL	PARTS NO					
M7系列	KG02E	KG04F-G1	KG04F-Y2			J
700K/700KD	KG02E	KG04F-G1	KG04F-Y2	UK12-G1	KG04F-A2	F G J
988/988D	KG96	KG04F-G	KG04F-Y	UK12-G	KG04F-A3	E H I

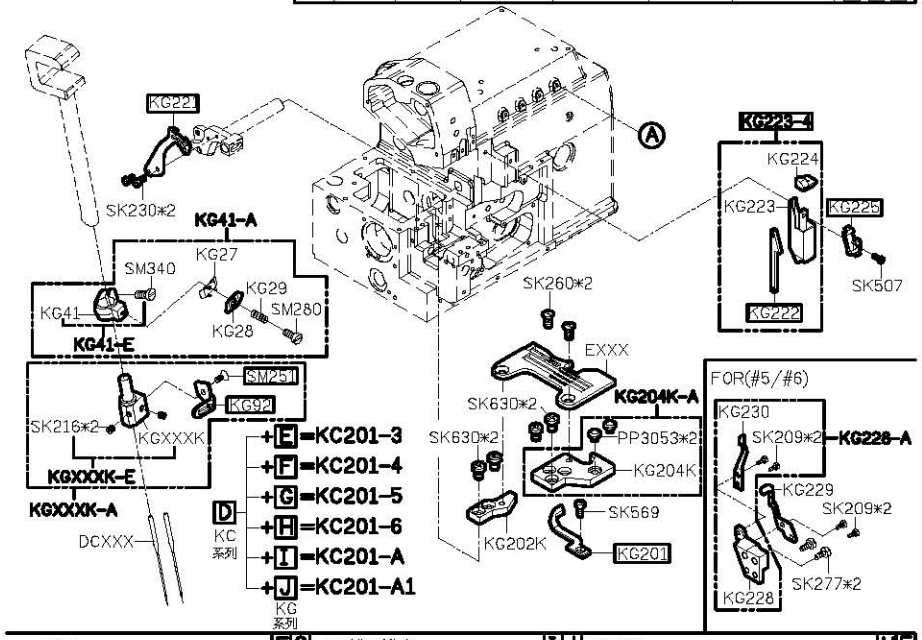

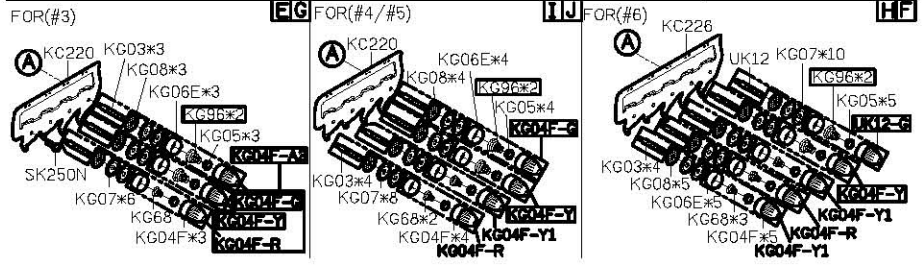

MODEL	3線/5線	4線/6線	4線M7/M8系列/M2-28
PARTS NO	KJ204	KJ234K	KJ204K
	KJ206	KJ203	KJ203
	KJ206-E	KJ203-E	KJ203-E
	KJ206-C	KJ203-C	KJ203-C
	KJ236	KJ208	KJ228
	KJ236-C	KJ208-C	KJ228-C
	KJ219		KJ238

MODEL	3線/4線	5線/6線	M7系列
PARTS NO	KL202		KL202A
	KL201-A		KL201-A1
	KL205	KL209	
		SK270	
	KL205-E	KL209-E	
	KL205-C	KL209-C	

KL系列 P + KL系列 R + KM系列 S = KL209-C

KL系列 P + KL系列 Q = KL205-C

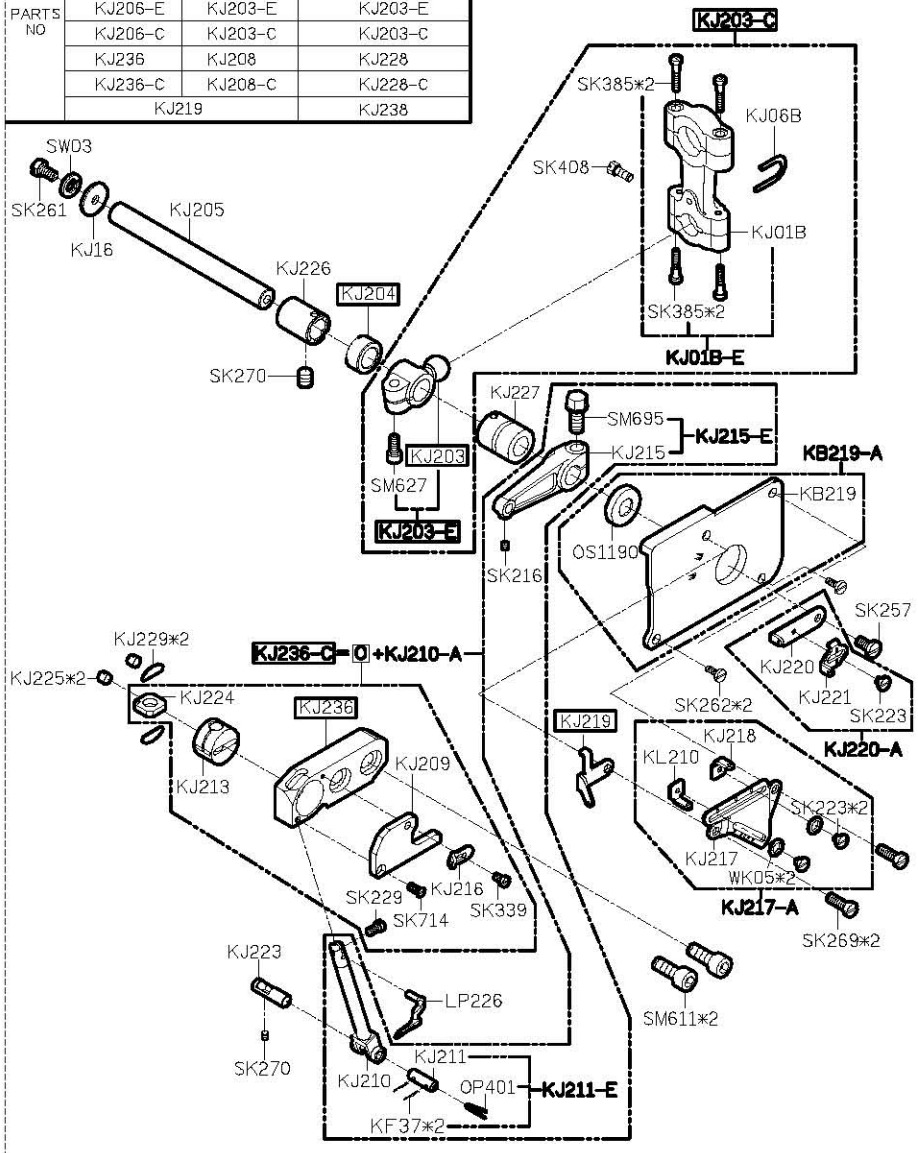

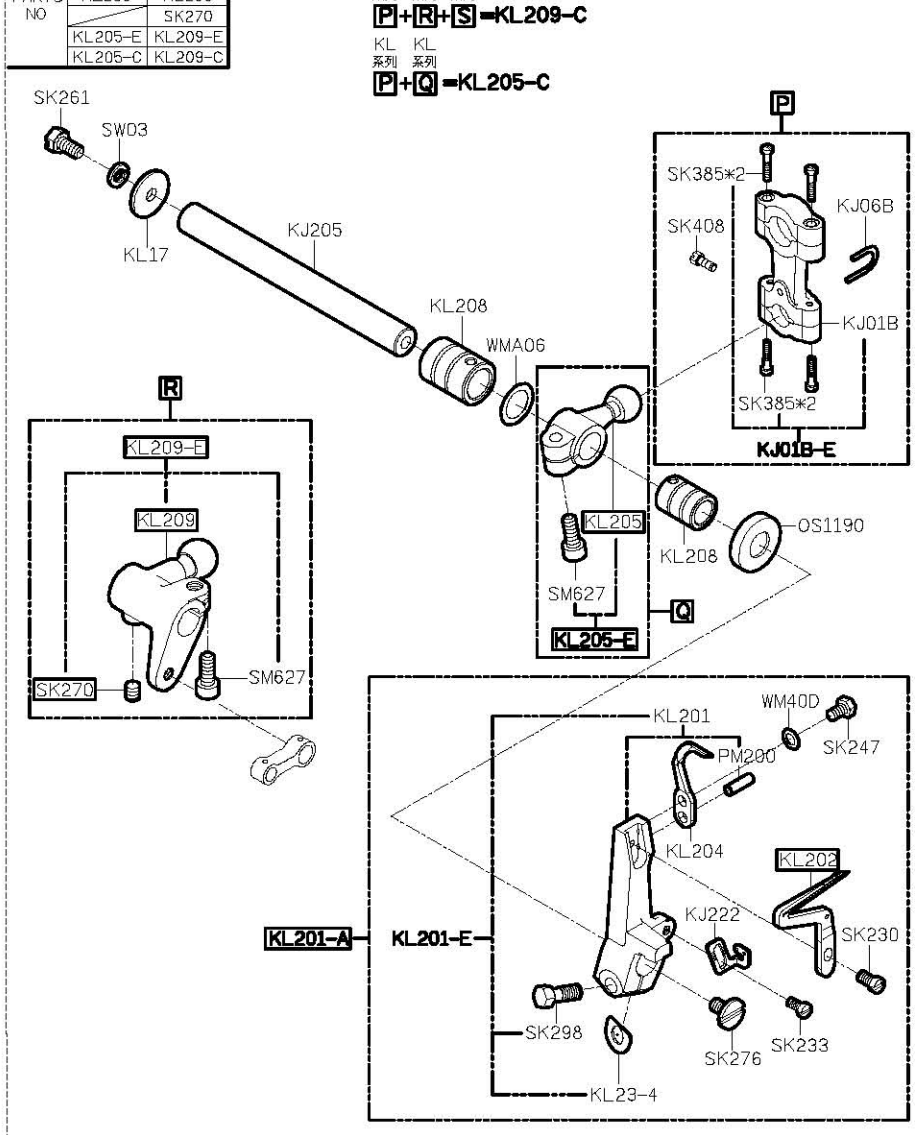

PARTS LIST FOR KJ GROUP

PARTS LIST FOR KL GROUP

PARTS LIST FOR KM GROUP

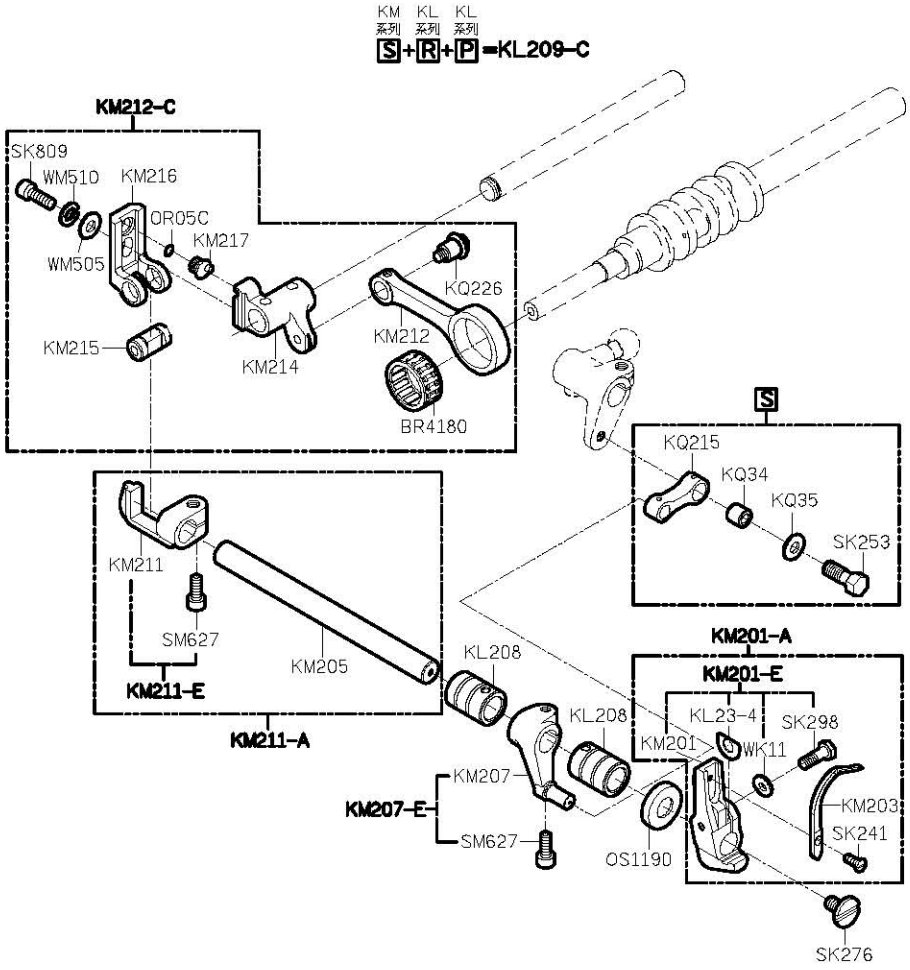

PARTS LIST FOR KN GROUP

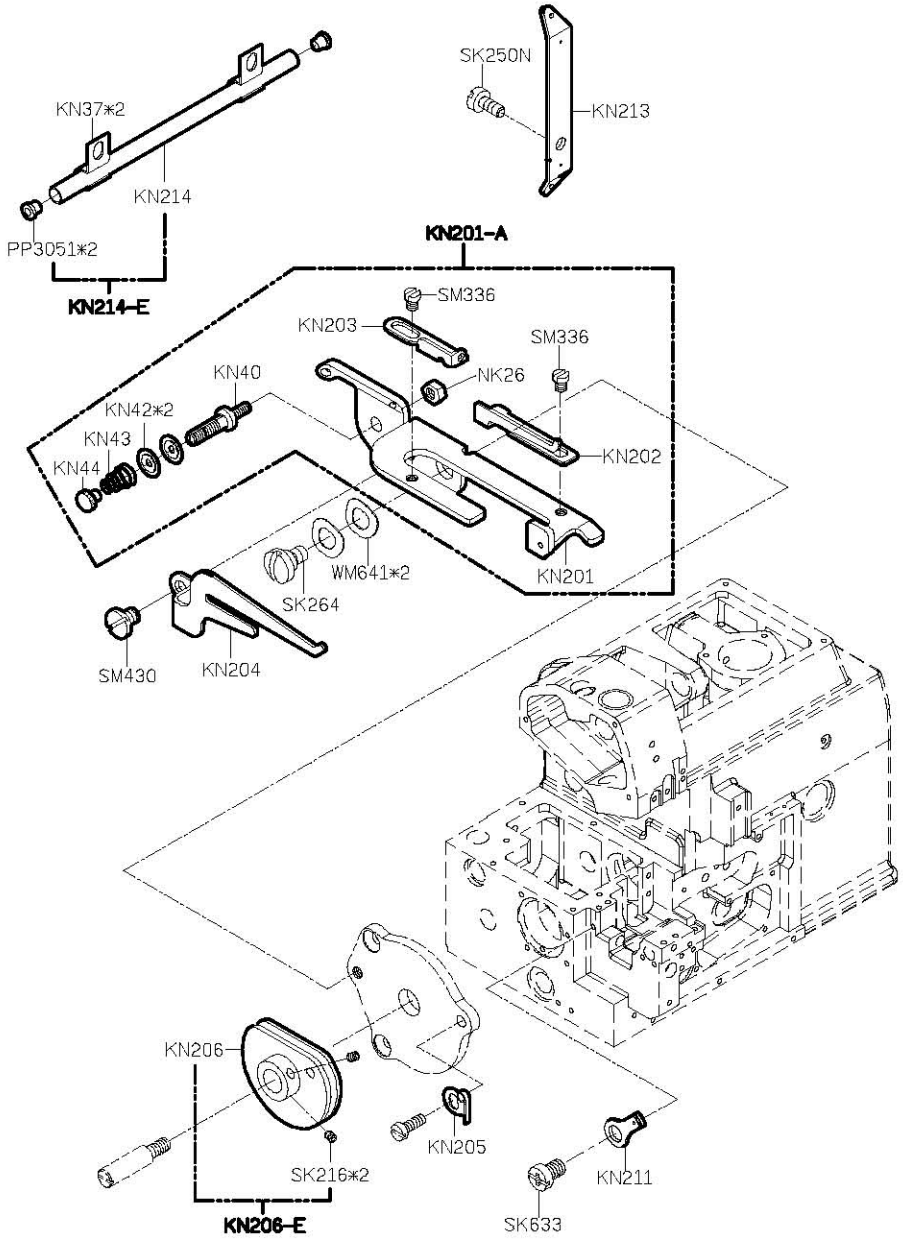

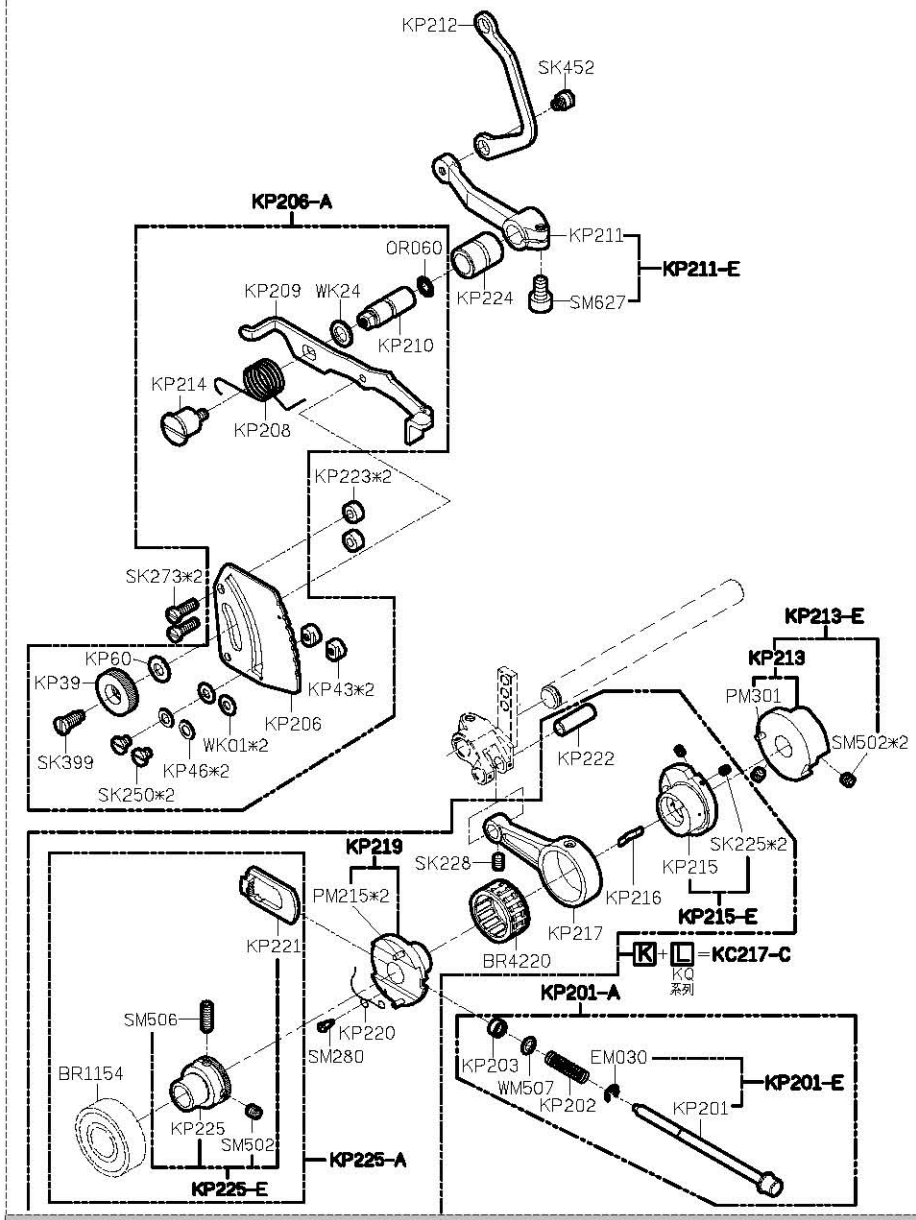

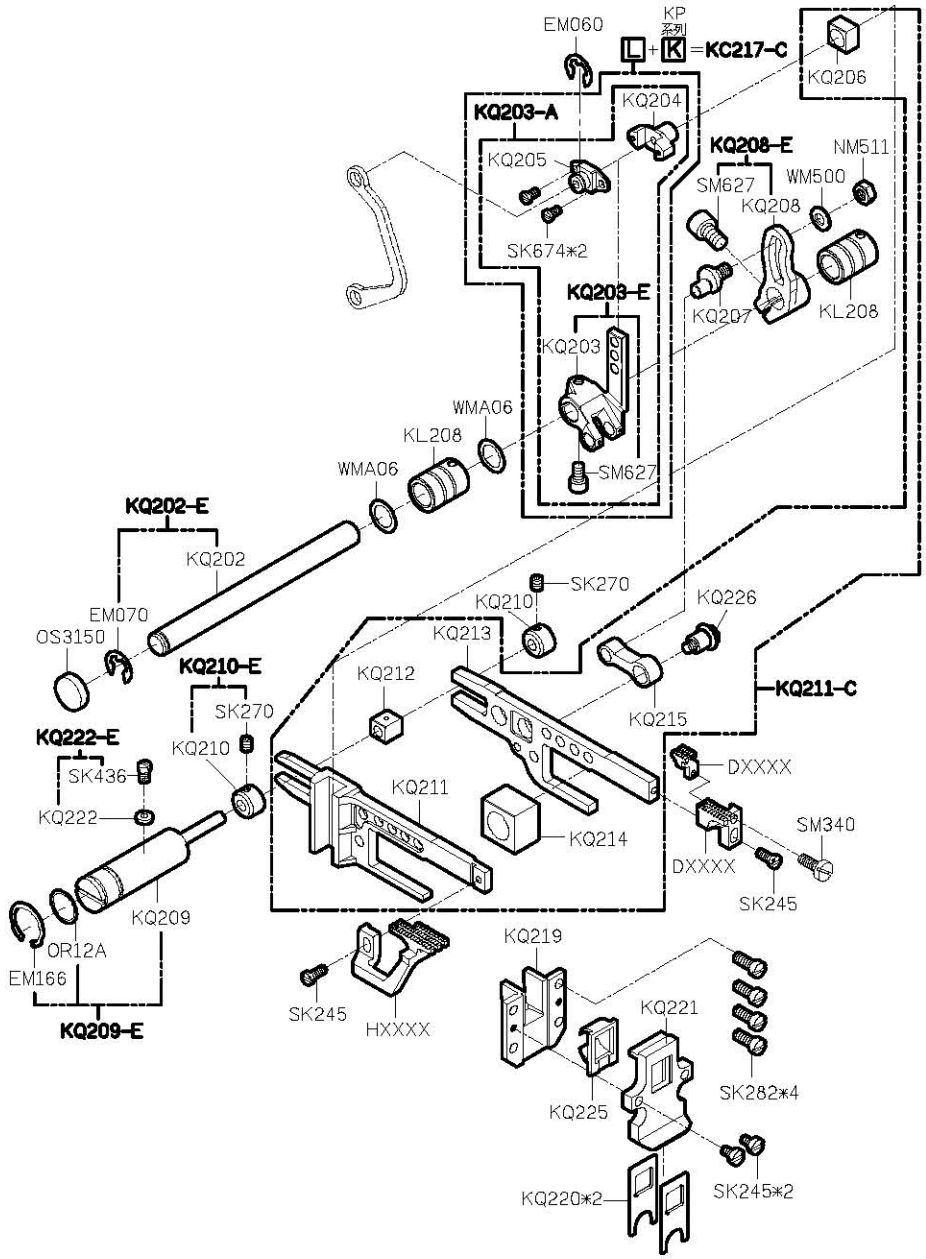

PARTS LIST FOR KP GROUP

PARTS LIST FOR KQ GROUP

PARTS LIST FOR KR GROUP

MODEL	3線/4線	5線/6線
PARTS NO	KR202	KR218
	KR202-E	KR218-E
	KR206	KR221
	KR206-A	KR221-A
	KR209	KR219
	KR209-A	KR219-A

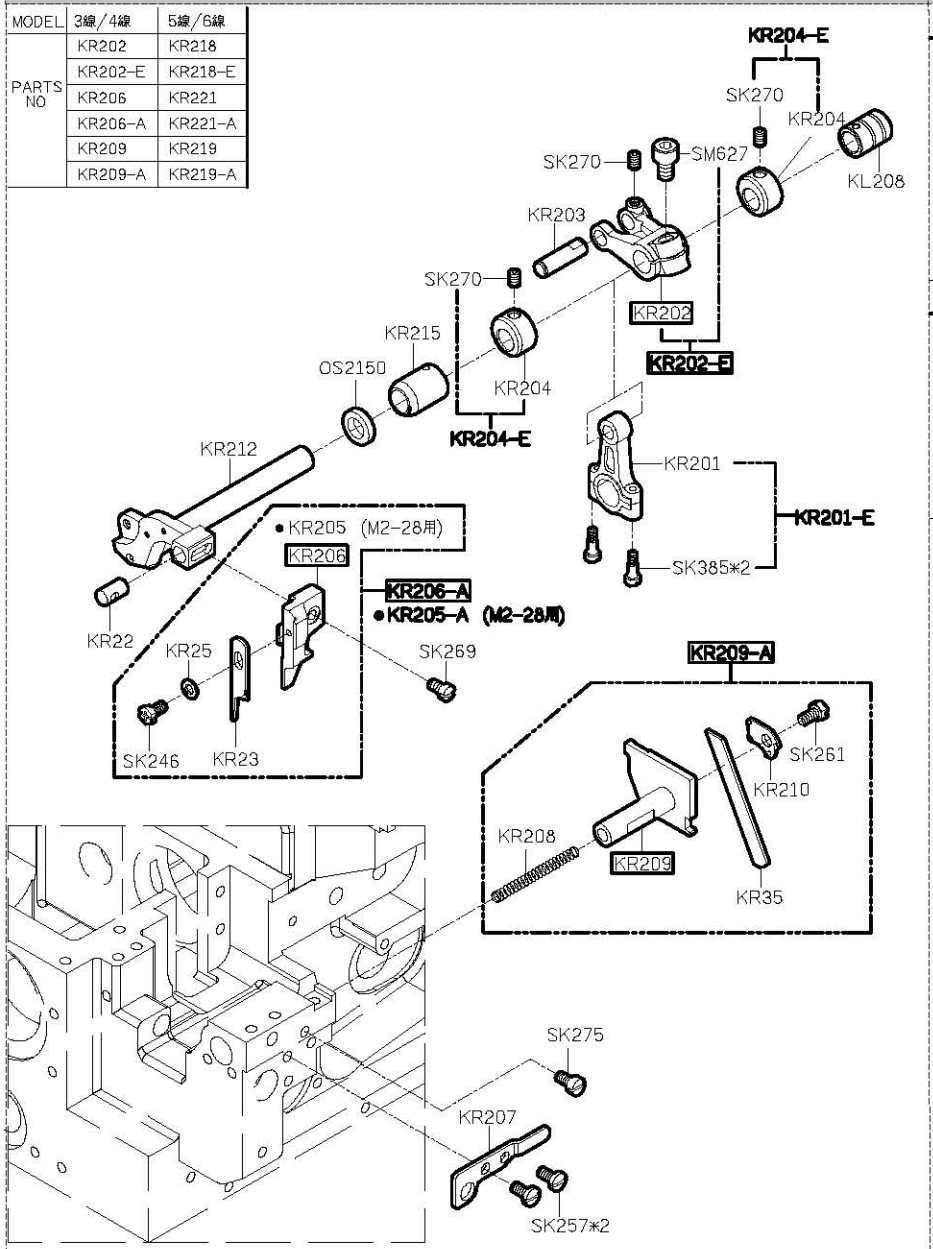

PARTS LIST FOR KS GROUP

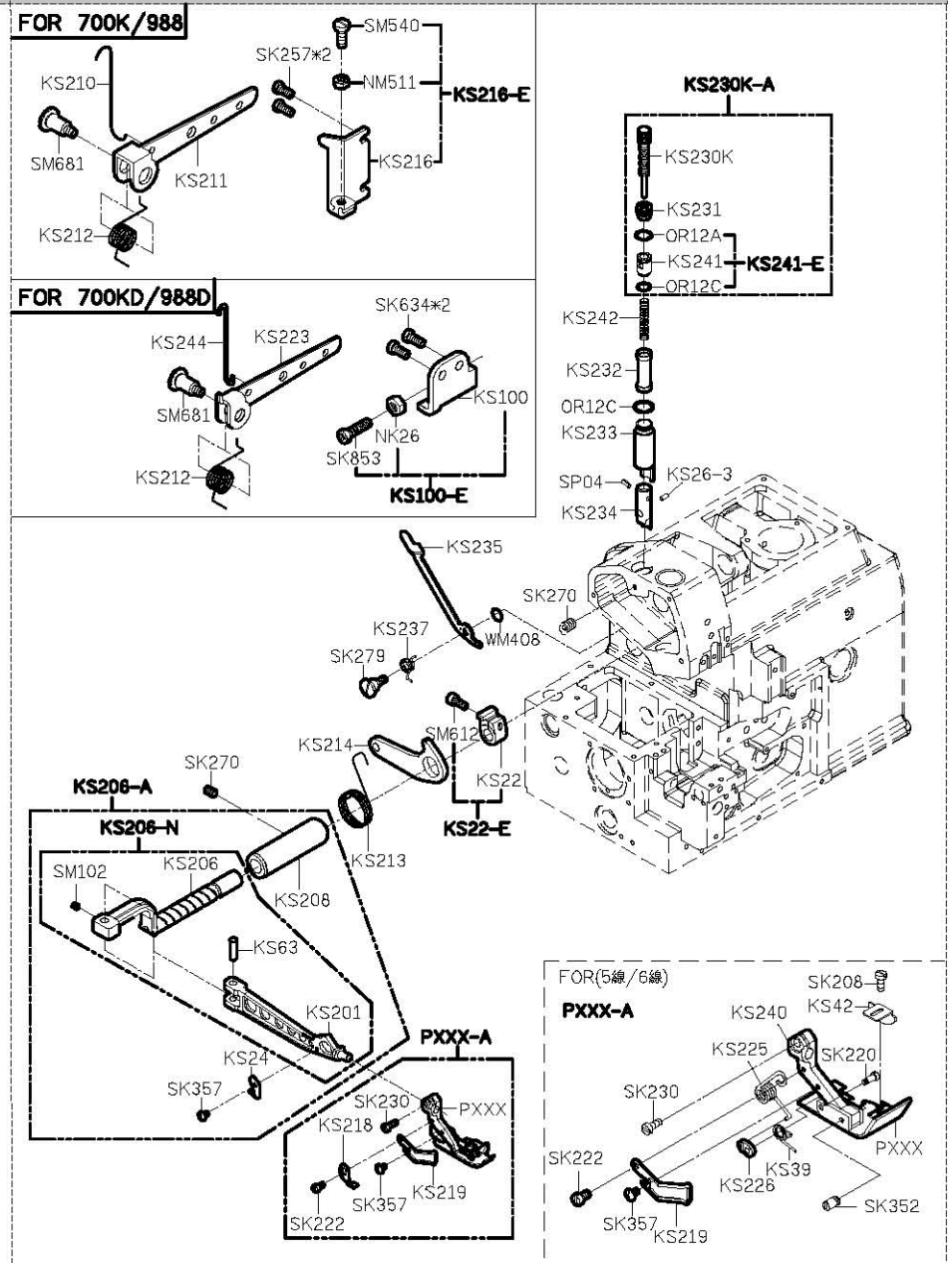

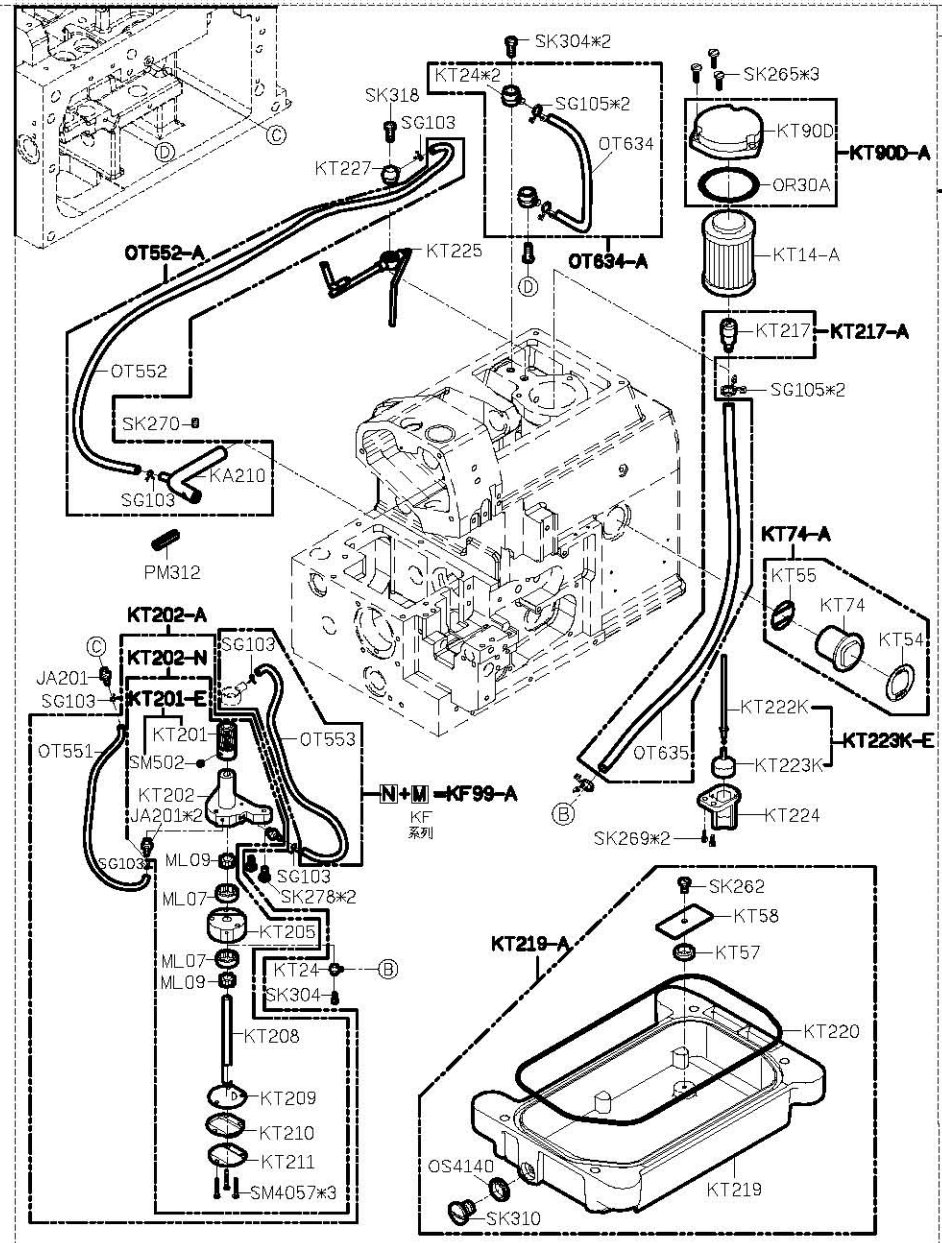

MODEL	3線/4線	5線/6線
PARTS NO	KU40	KU39
	KU220-4	KU220-5
	KU207	KU209
	KU206	KU211
	KU201-4	KU201-5
	SK277	SK437

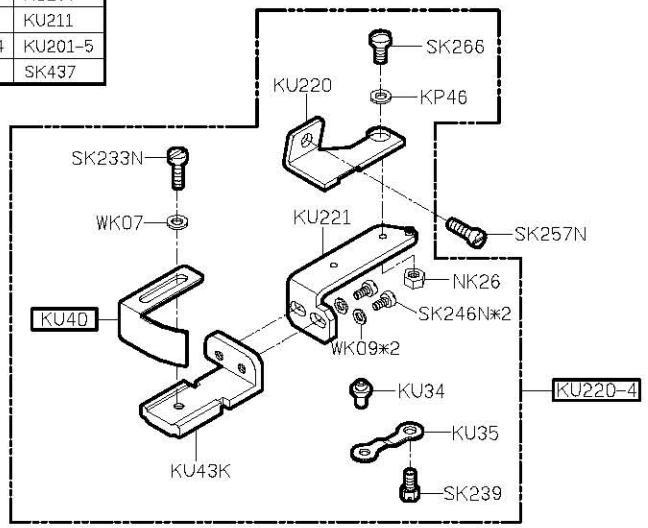

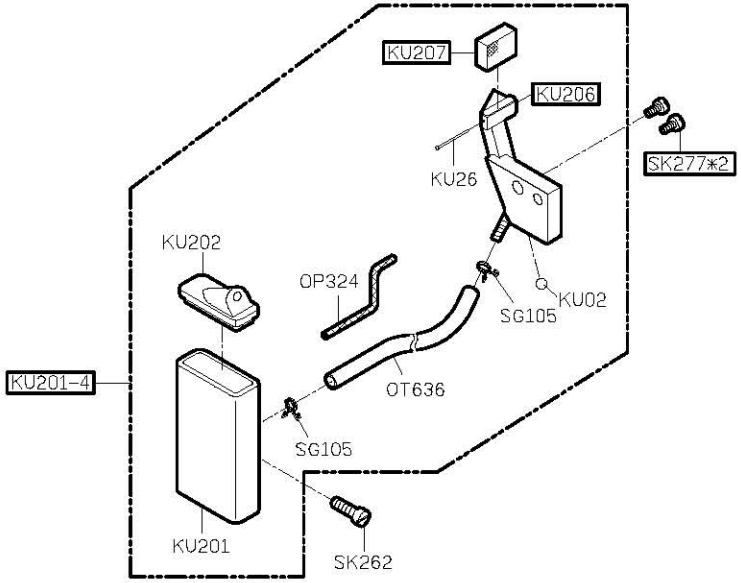

PARTS LIST FOR KT GROUP

PARTS LIST FOR KU GROUP

PARTS LIST FOR KW (1) GROUP

KW40E-3

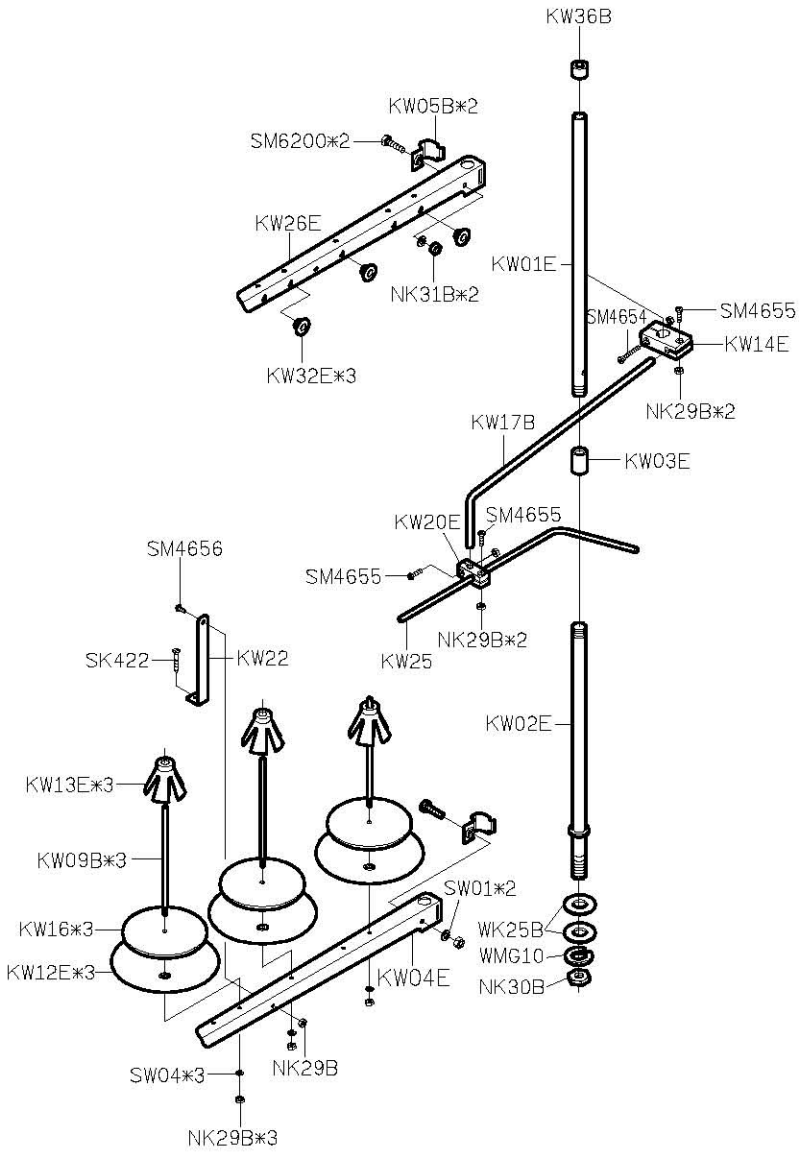

PARTS LIST FOR KW (2) GROUP

KW40E-4

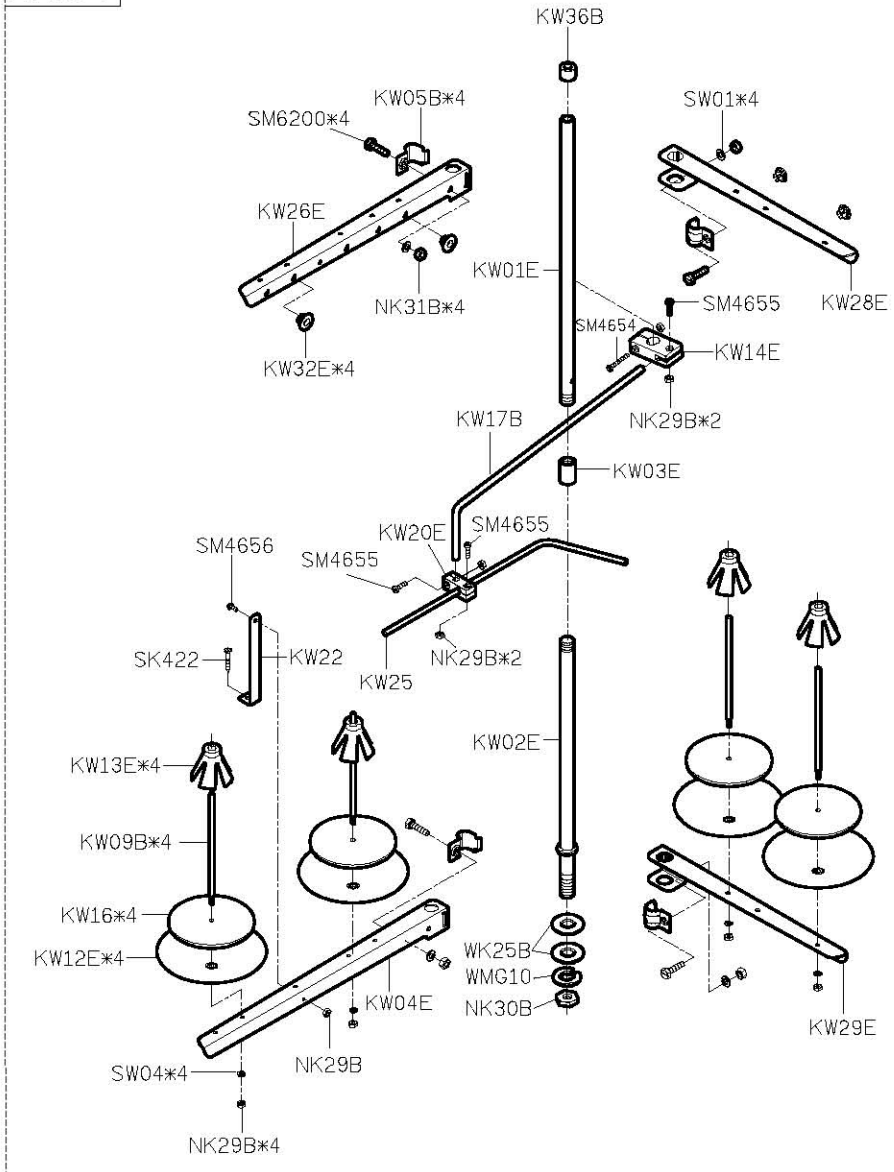

KW40E-5

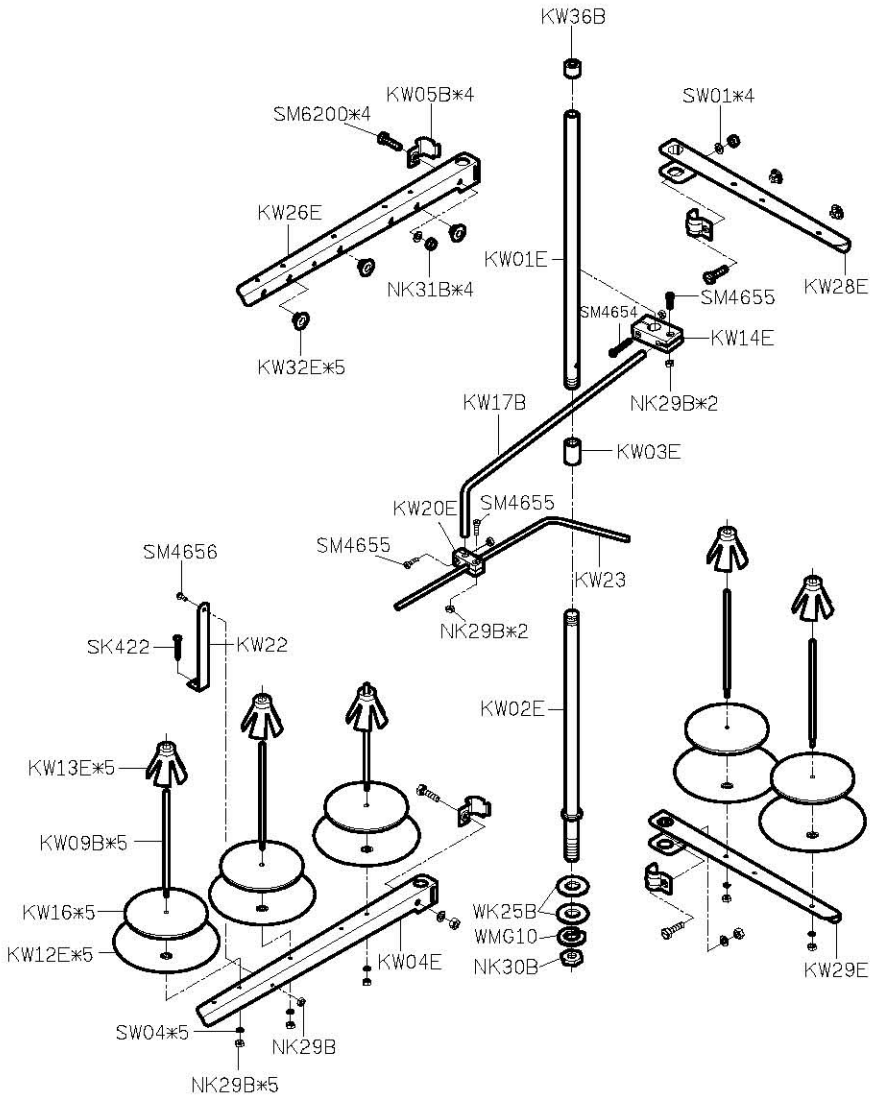

KW40E-6

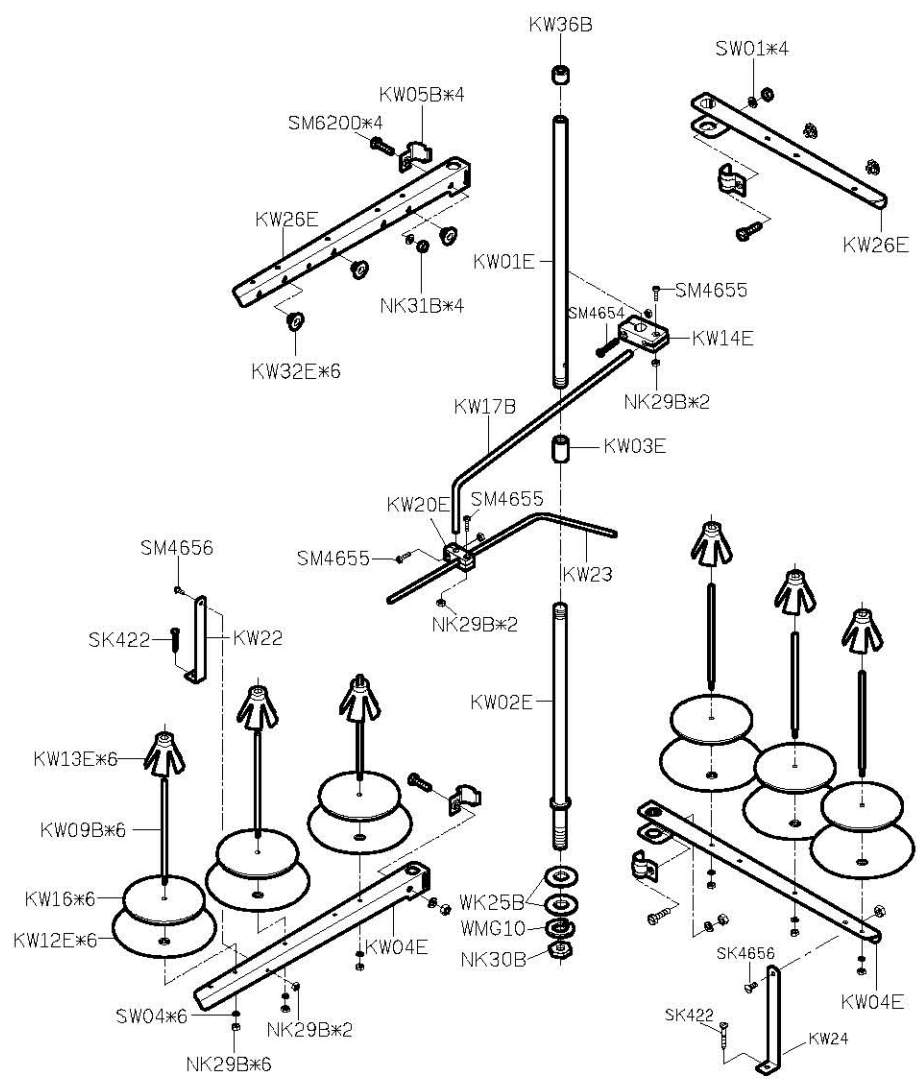

PARTS LIST FOR KW (3) GROUP

PARTS LIST FOR KW (4) GROUP

PARTS LIST FOR KX GROUP

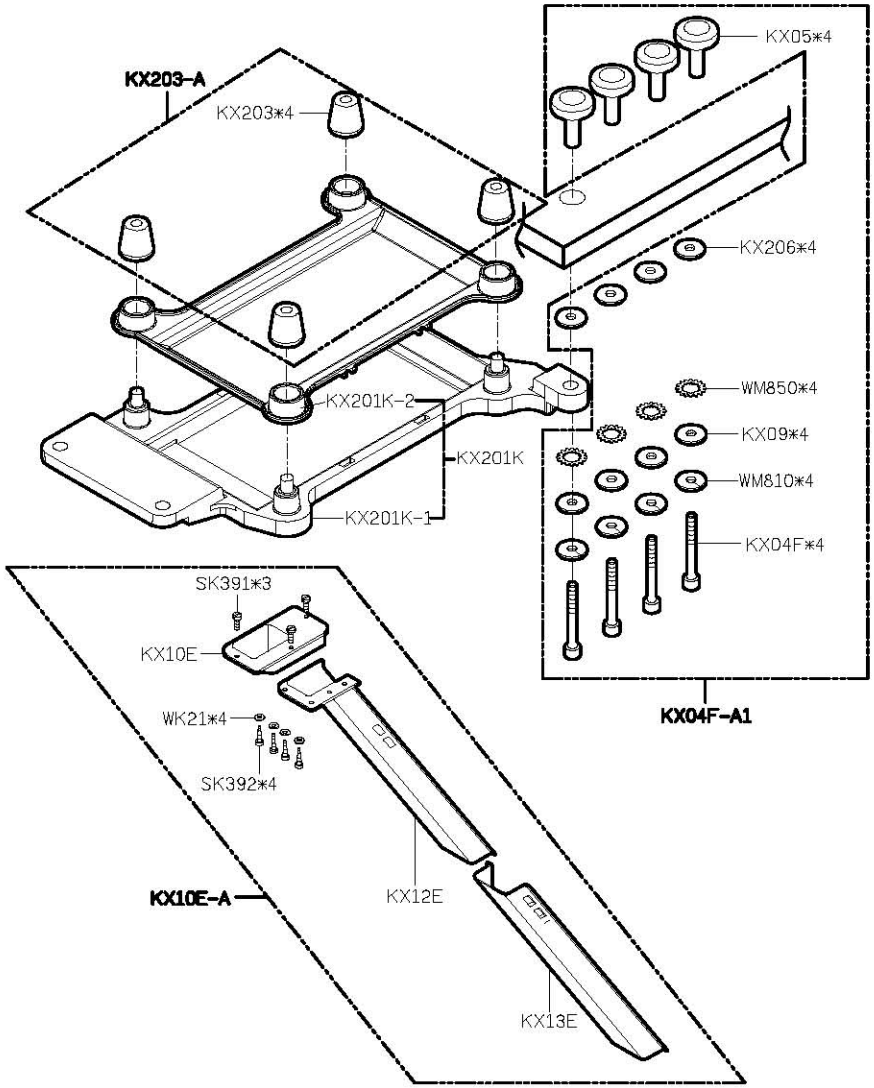

PARTS LIST FOR KY GROUP

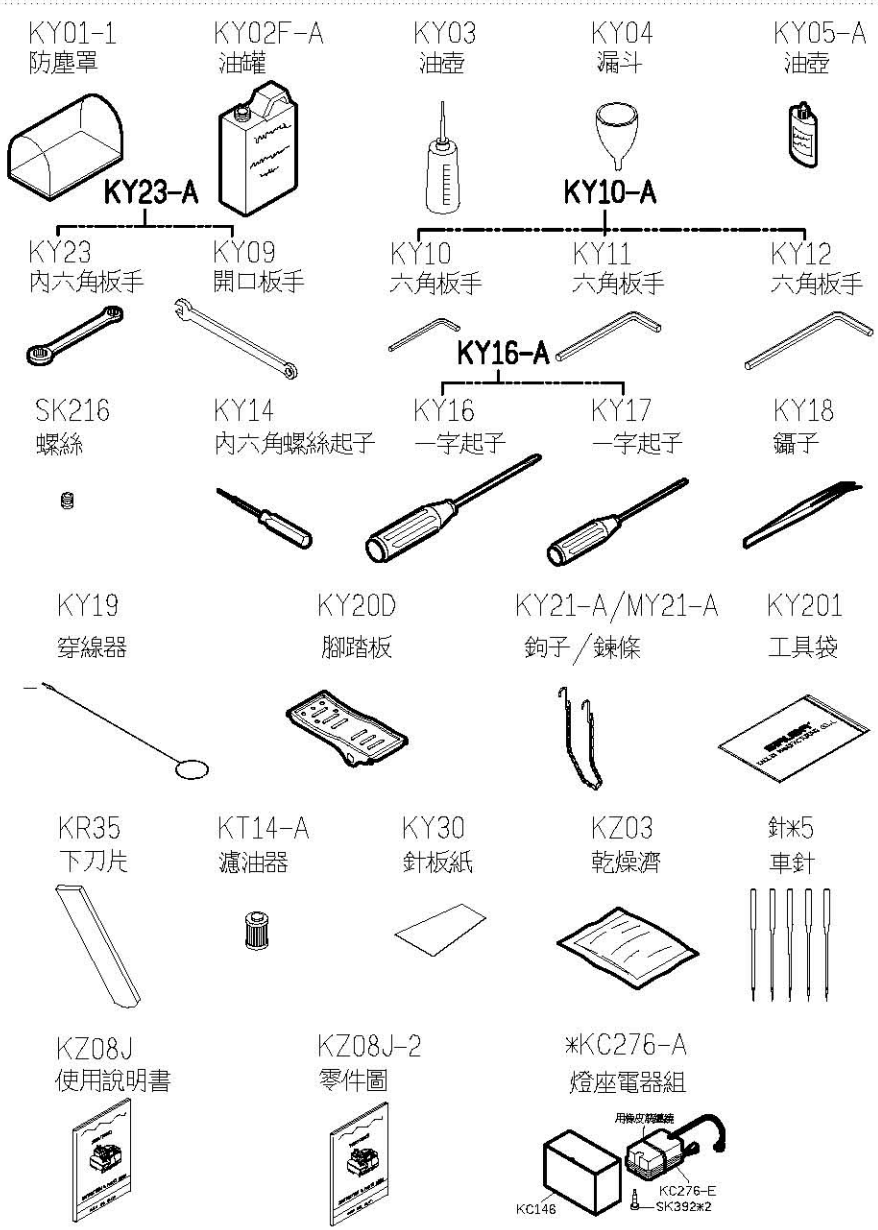

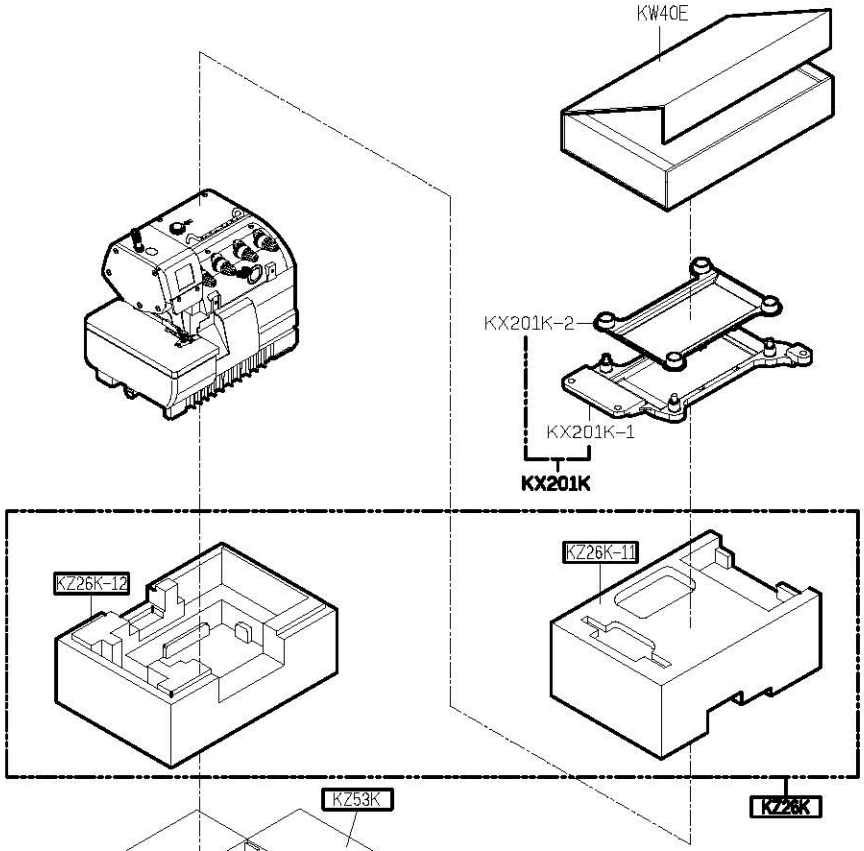

MODEL	PARTS NO		
700K	KZ53K	KZ26K-E	KZ26K-11/KZ26K-12
988	KZ53K-1	KZ26K-E	KZ26K-11/KZ26K-12
700KD	KZ53KD	KZ26K-E	KZ26K-11/KZ26K-12
988D	KZ53KD-1	KZ26K-E	KZ26K-11/KZ26K-12
700K-LFC	KZ55K	KZ51K	KZ51K-1/KZ26K-2
988-LFC	KZ55K-1	KZ51K	KZ51K-1/KZ26K-2
700KD-LFC	KZ55KD	KZ51K	KZ51K-1/KZ26K-2
988D-LFC	KZ55KD-1	KZ51K	KZ51K-1/KZ26K-2

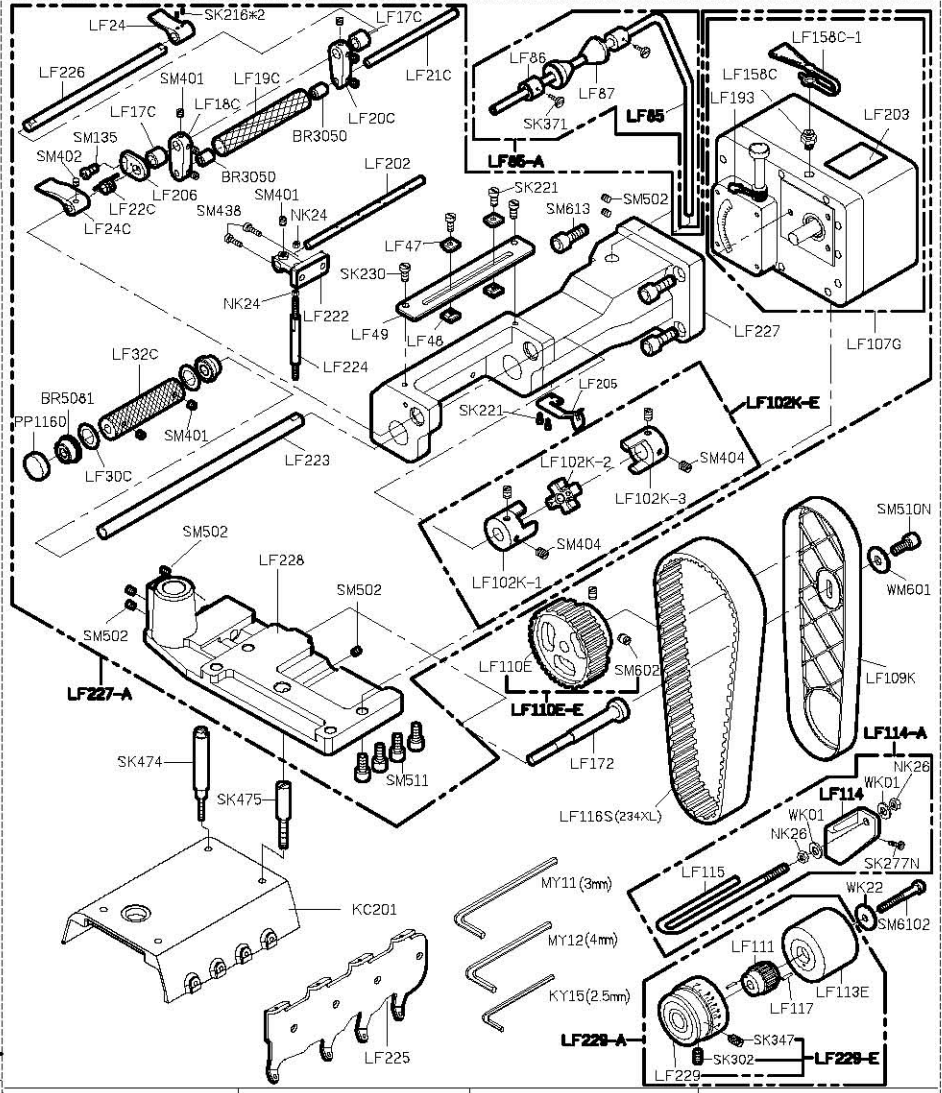

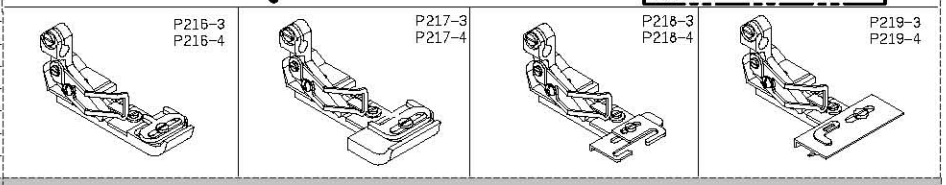

PARTS LIST FOR KZ GROUP

PARTS LIST FOR LFC-3 GROUP

PARTS LIST FOR PS-K GROUP

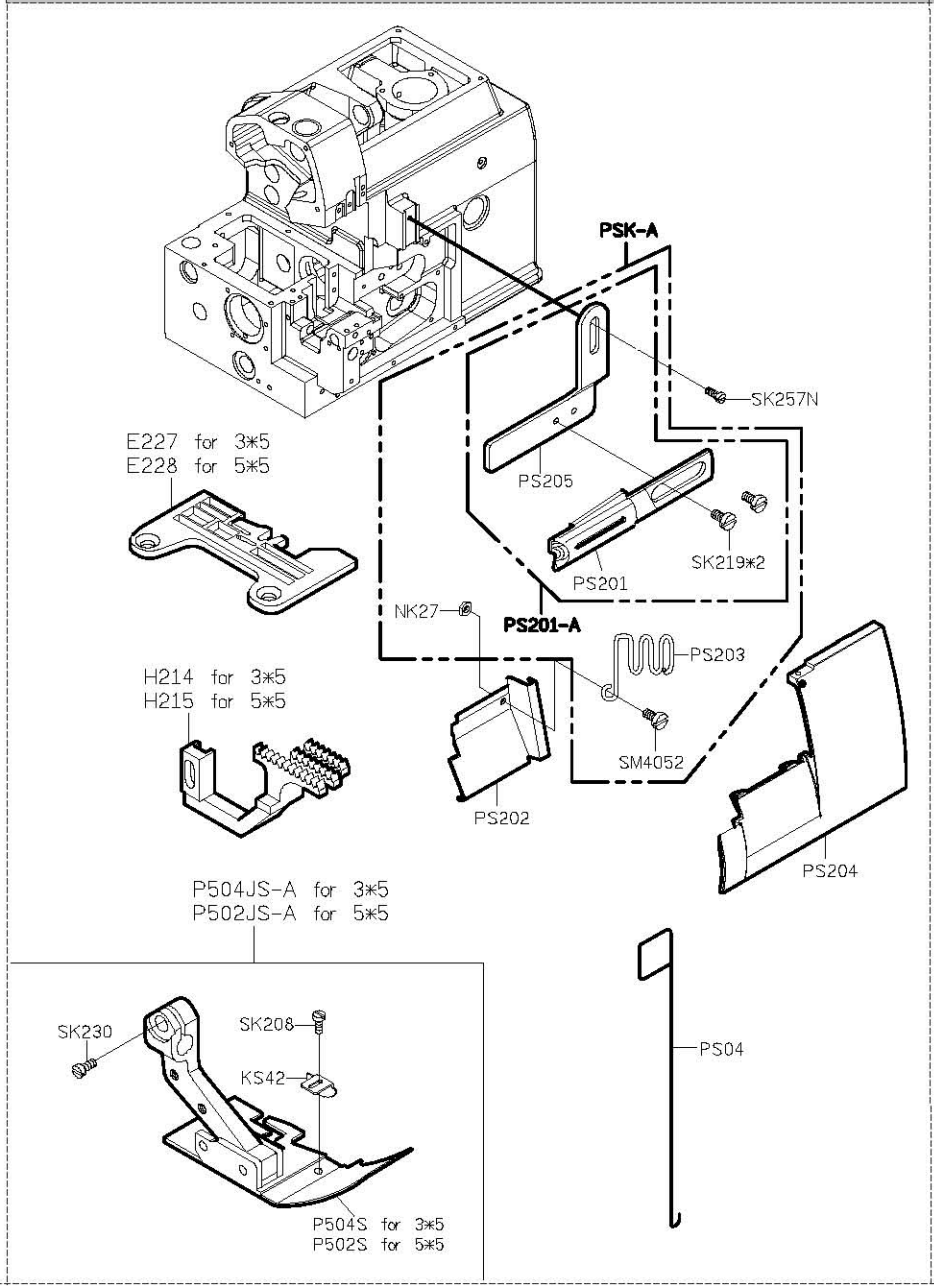

PARTS LIST FOR TA-K GROUP

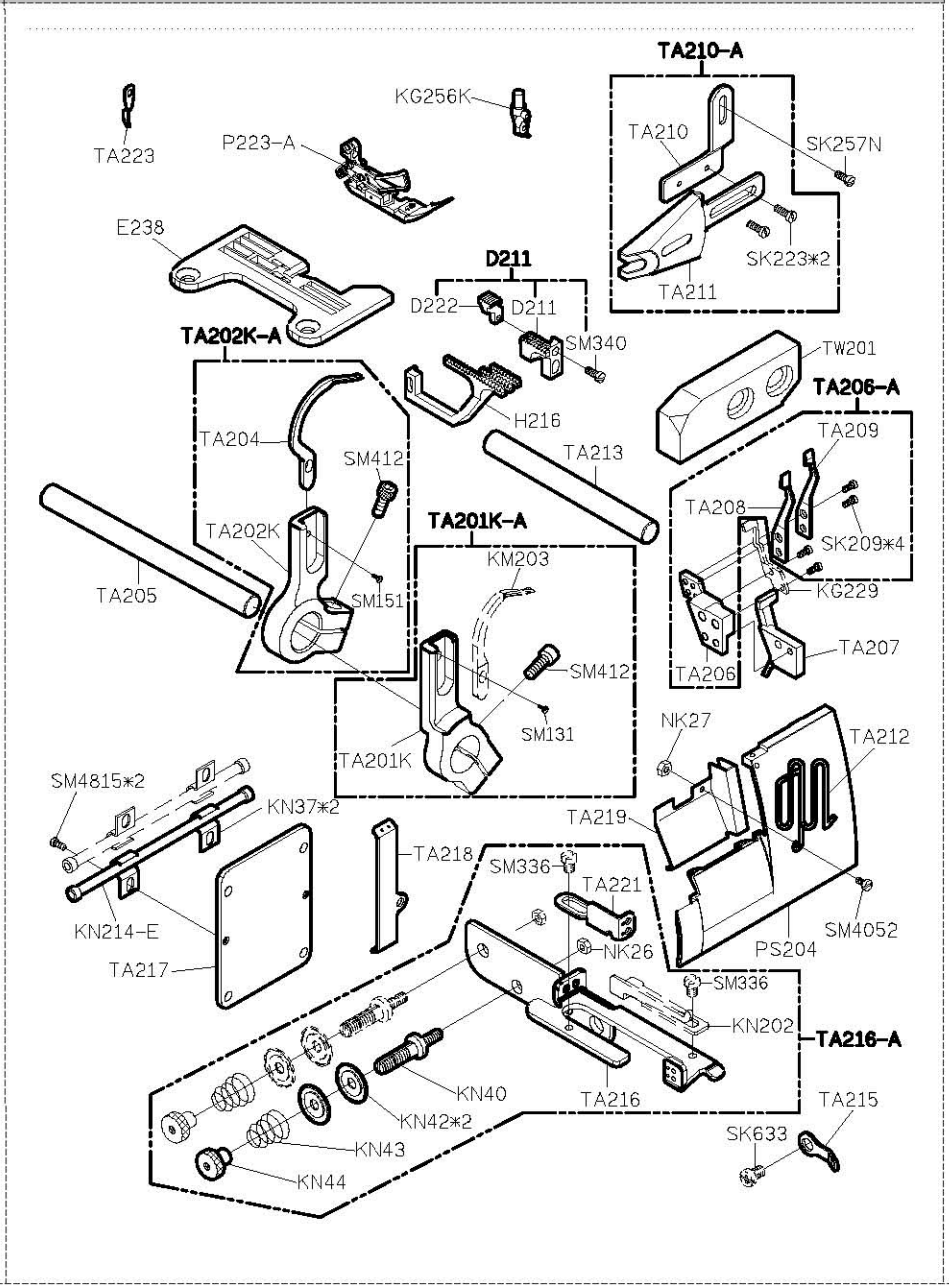

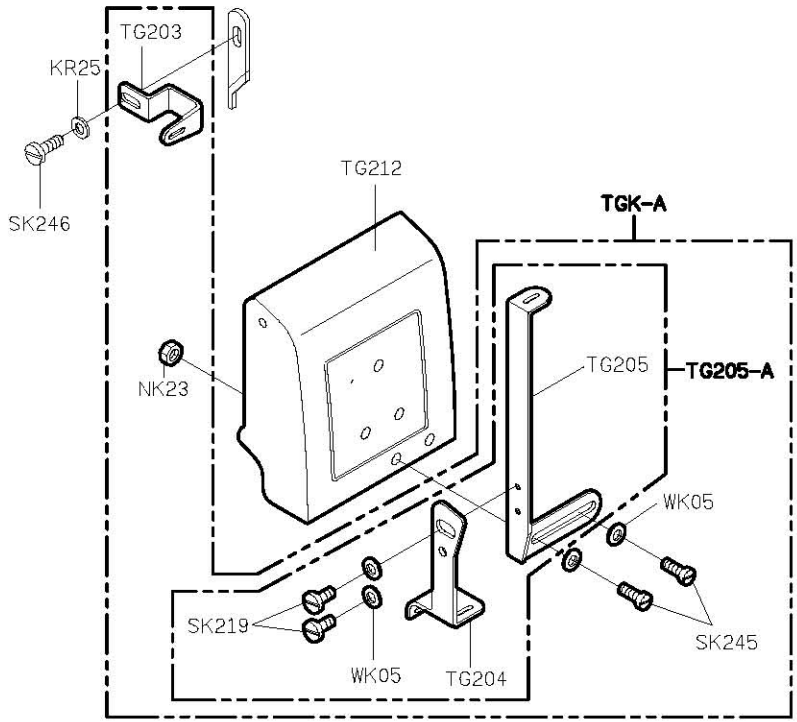

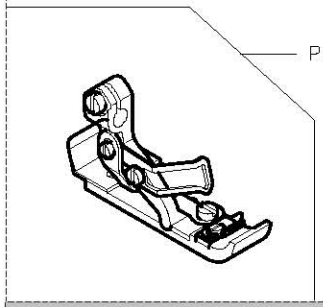

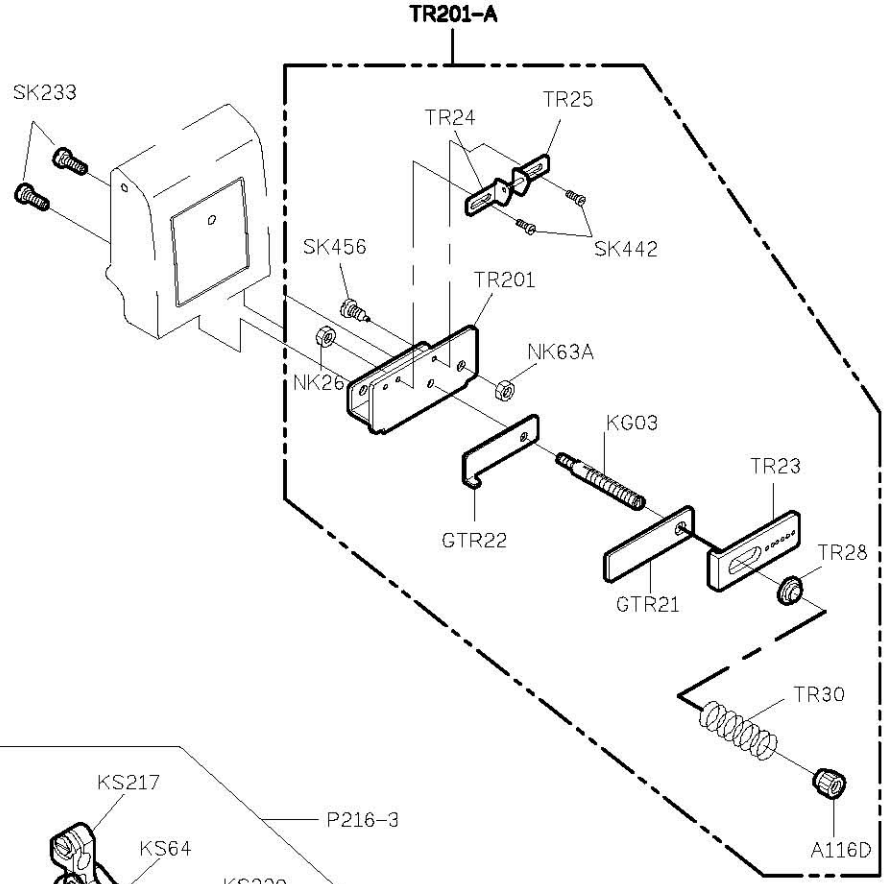

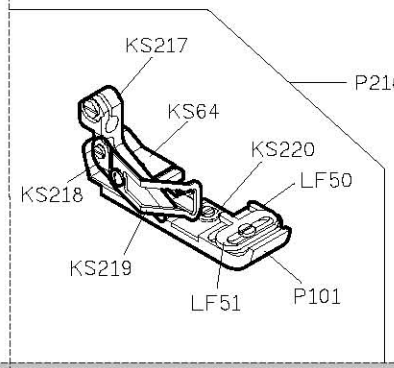

PARTS LIST FOR TG GROUP

PARTS LIST FOR TR GROUP

PARTS LIST FOR TW GROUP

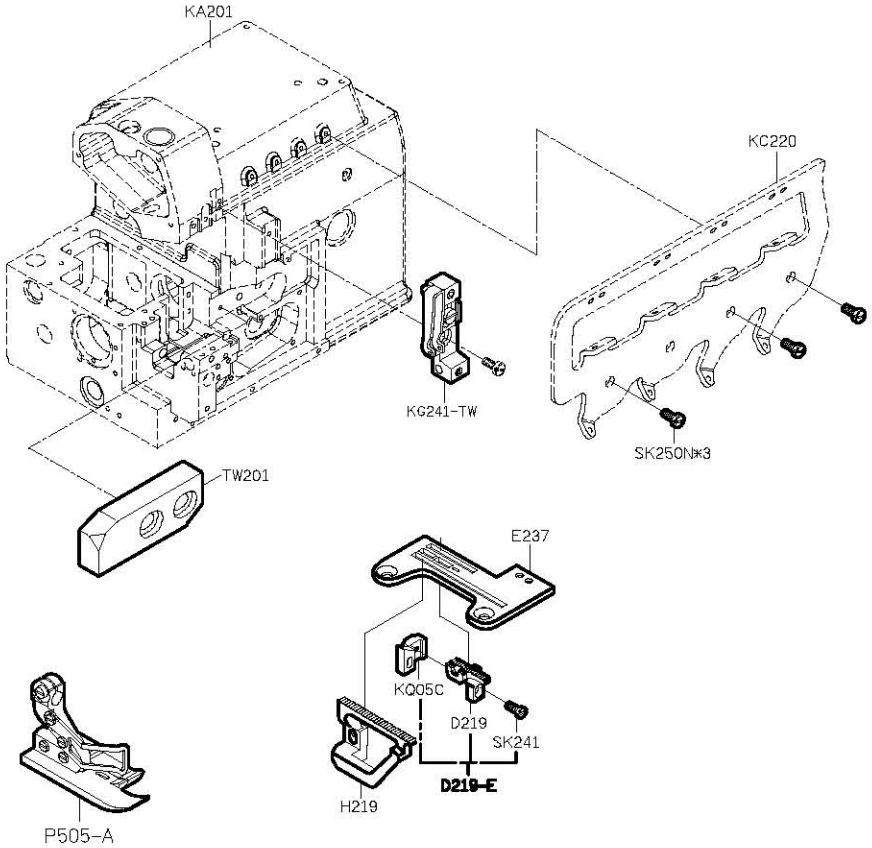

P506-A

● 客戶選購

PARTS NO	GAUGE
P506-2	5
P506-3	6

PARTS LIST FOR VT GROUP

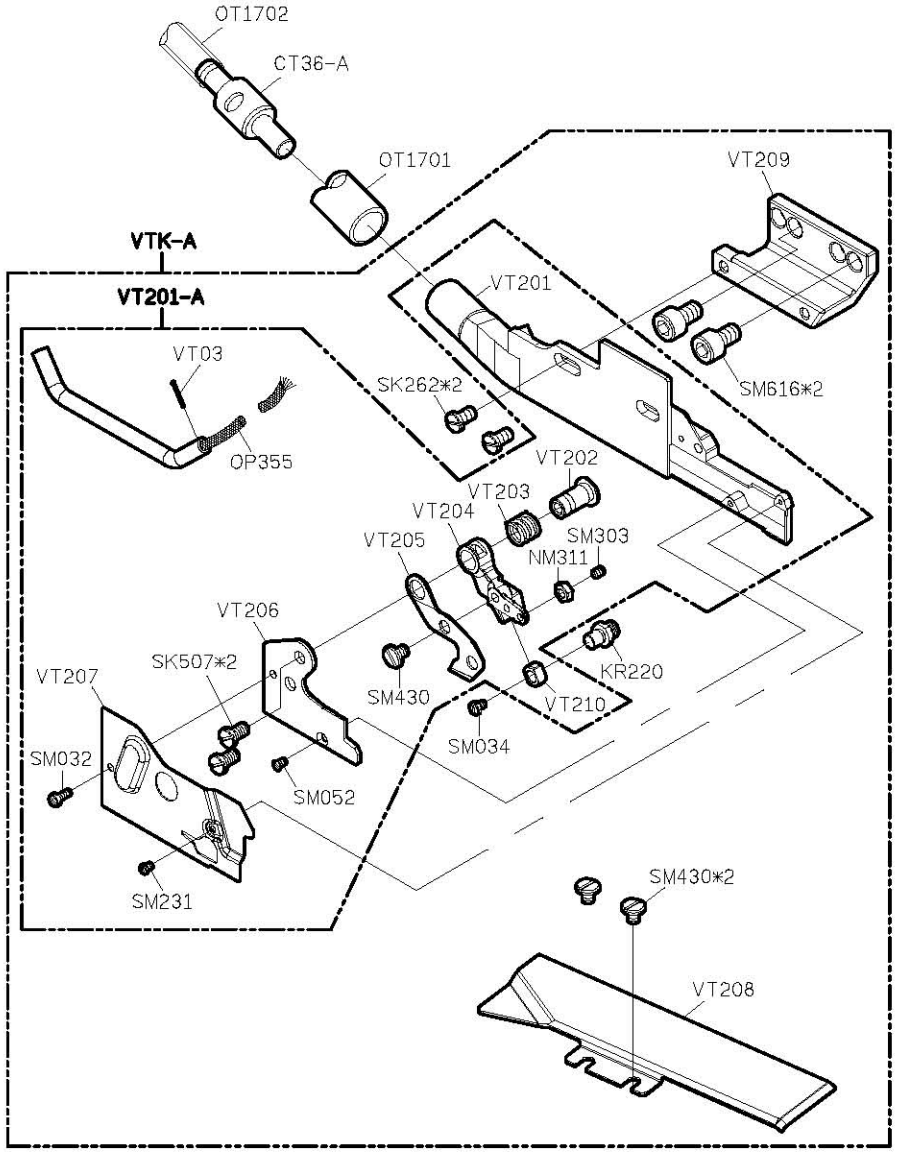

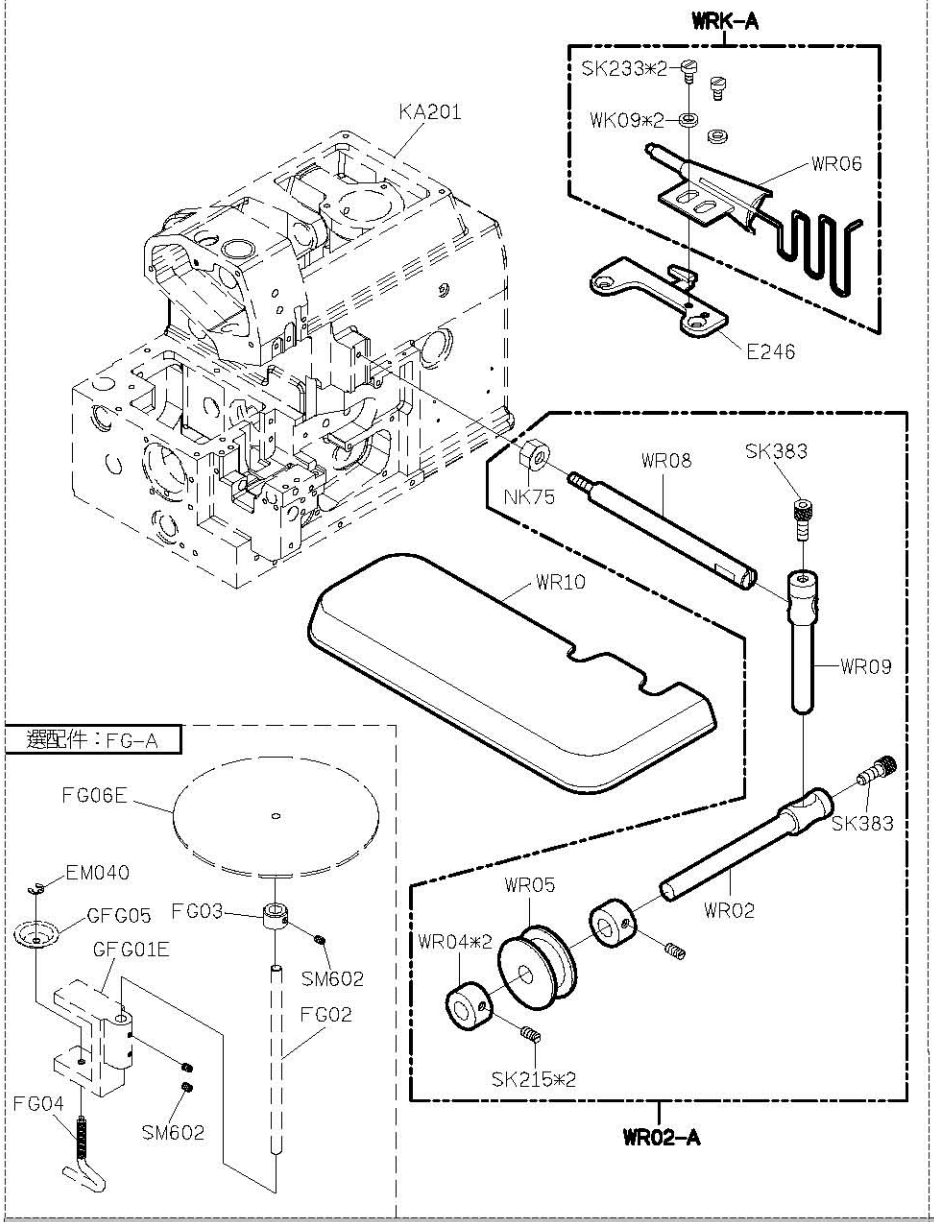

PARTS LIST FOR WR-K GROUP

700KD

高林股份有限公司 KAULIN MFG. CO., LTD.

The specification and/or appearances of the equipment described in this parts list are subject to change because of modification without previous notice.

KZ08J-2. SEP. 2010

SiRUBA®

銀箭牌工業用縫紉機

INDUSTRIAL SEWING MACHINE

700KD

零件圖 PARTS LIST

CE

高林股份有限公司
KAULIN MFG. CO., LTD.

機 型 MODEL	針板 NEEDLE PLATE	送具 FEED DOG		送具 FEED DOG	押具 PRESSER FOOT	勾針 LOOPER	針留 NEEDLE CLAMP	束子 COLLER	衝程 CRANK	衝程 CRANK	大心 Crankshaft	勾針連桿座 Upper Looper Holder	過線器 Bracket	下刀架 Lower Knife Holder	針號 NEEDLE
737K-503M2-04	E222	D210	D207	H204	P201-14A	LP231	KG231K-E	KJ204	KF203-E	KJ206-E	KD201	KJ236	KJ219	KR209	DCX27#11
737K-504F1-04	E206	D201	D207	H201	P201-14A	LP225	KG231K-E	KJ204	KF203-E	KJ206-E	KD201	KJ236	KJ219	KR209	DCX27#9
737K-504F1-15	E233K	D201	D217	H201	P214P-A	LP225	KG231K-E	KJ204	KF203-E	KJ206-E	KD201	KJ236	KJ219	KR209	DCX27#9
737K-504F2-02/GA-L	E233K	D201	D217	H201	P214P-2A	LP225	KG231K-E	KJ204	KF203-E	KJ206-E	KD201	KJ236	KJ219	KR209	DCX27#9
737K-504M1-15	E207	D201	D209	H201	P211-A	LP225	KG231K-E	KJ204	KF203-E	KJ206-E	KD201	KJ236	KJ219	KR209	DCX27#9
737K-504M1-15VT	E207	D201	D209	H201	P211-A	LP225	KG231K-E	KJ204	KF203-E	KJ206-E	KD201	KJ236	KJ219	KR209	DCX27#9
737K-504M2-04	E222	D210	D207	H204	P201-14A	LP225	KG231K-E	KJ204	KF203-E	KJ206-E	KD201	KJ236	KJ219	KR209	DCX27#11
737K-504M2-04CT	E222	D210	D207	H204	P201-14A	LP225	KG231K-E	KJ204	KF203-E	KJ206-E	KD201	KJ236	KJ219	KR209	DCX27#11
737K-504M2-04EC	E222	D210	D207	H204	P201-14A	LP225	KG231K-E	KJ204	KF203-E	KJ206-E	KD201	KJ236	KJ219	KR209	DCX27#11
737K-504M2-04LFC-3	E222	D210	D207	H204	P216-3	LP225	KG231K-E	KJ204	KF203-E	KJ206-E	KD201	KJ236	KJ219	KR209	DCX27#11
737K-504M2-04LFC-3/EC	E222	D210	D207	H204	P216-3	LP225	KG231K-E	KJ204	KF203-E	KJ206-E	KD201	KJ236	KJ219	KR209	DCX27#11
737K-504M2-04TR	E222	D210	D207	H204	P216-3	LP225	KG231K-E	KJ204	KF203-E	KJ206-E	KD201	KJ236	KJ219	KR209	DCX27#11
737K-504M2-04TR/EC	E222	D210	D207	H204	P216-3	LP225	KG231K-E	KJ204	KF203-E	KJ206-E	KD201	KJ236	KJ219	KR209	DCX27#11
737K-504M2-04VT	E222	D210	D207	H204	P201-14A	LP225	KG231K-E	KJ204	KF203-E	KJ206-E	KD201	KJ236	KJ219	KR209	DCX27#11
737K-WR/LFC-3	E246					LP225	KG231K-E	KJ204	KF203-E	KJ206-E	KD201	KJ236	KJ219		DCX27#11
737K-504M3-04	E220	D210	D209	H204	P201-14A	LP225	KG231K-E	KJ204	KF203-E	KJ206-E	KD201	KJ236	KJ219	KR209	DCX27#11
737K-504M3-05	E221	D210	D209	H204	P201-14A	LP225	KG231K-E	KJ204	KF203-E	KJ206-E	KD201	KJ236	KJ219	KR209	DCX27#11
737K-504M3-05CT	E221	D210	D209	H204	P201-14A	LP225	KG231K-E	KJ204	KF203-E	KJ206-E	KD201	KJ236	KJ219	KR209	DCX27#11
737K-504M3-05PZ	E221	D210	D209	H204	P257-A	LP225	KG231K-E	KJ204	KF203-E	KJ206-E	KD201	KJ236	KJ219	KR209	DCX27#18
737K-504M3-05VT	E221	D210	D209	H204	P201-14A	LP225	KG231K-E	KJ204	KF203-E	KJ206-E	KD201	KJ236	KJ219	KR209	DCX27#11
737K-504M5-04BK	E232	D203	D207	H203	P202-2A	LP225	KG231K-E	KJ204	KF203-E	KJ206-E	KD201	KJ236	KJ219	KR209	DCX27#11
737K-504M5-04BK-1	E232	D203	D207	H203	P202-2A	LP225	KG231K-E	KJ204	KF203-E	KJ206-E	KD201	KJ236	KJ219	BK239	DCX27#11
737K-504M5-04BK/VT	E232	D203	D207	H203	P202-2A	LP225	KG231K-E	KJ204	KF203-E	KJ206-E	KD201	KJ236	KJ219	KR209	DCX27#11
737K-504M5-04BK-1/VT	E232	D203	D207	H203	P202-2A	LP225	KG231K-E	KJ204	KF203-E	KJ206-E	KD201	KJ236	KJ219	BK239	DCX27#11
737K-505F1-04	E206	D201	D207	H201	P203-A	LP225	KG231K-E	KJ204	KF203-E	KJ206-E	KD201	KJ236	KJ219	KR209	DCX27#9
737K-505F1-04VT	E206	D201	D207	H201	P203-A	LP225	KG231K-E	KJ204	KF203-E	KJ206-E	KD201	KJ236	KJ219	KR209	DCX27#9
747K-512M1-25	E208	D210	D207	H204	P201-A	LP228	KG242K-E	KJ204	KF215-E	KJ203-E	KD201	KJ208	KJ219	KR209	DCX27#11*2
747K-512M1-25CT	E208	D210	D207	H204	P201-A	LP228	KG242K-E	KJ204	KF215-E	KJ203-E	KD201	KJ208	KJ219	KR209	DCX27#11*2
747K-512M1-34	E236	D210	D207	H204	P214-A	LP228	KG254K-E	KJ204	KF215-E	KJ203-E	KD201	KJ208	KJ219	KR209	DCX27#14*2
747K-514F1-24	E212	D210	D207	H204	P201-A	LP226	KG242K-E	KJ234K	KF203-E	KJ203-E	KD201	KJ208	KJ219	KR209	DCX27#11*2
747K-514H4-24GA	E229	D202	D207	H202	P204-A	LP226	KG242K-E	KJ234K	KF203-E	KJ203-E	KD201	KJ208	KJ219	KR209	DCX27#11*2
747K-514H4-24GA/CT	E229	D202	D207	H202	P204-A	LP226	KG242K-E	KJ234K	KF203-E	KJ203-E	KD201	KJ208	KJ219	KR209	DCX27#11*2
747K-514H4-24GA/EC	E229	D202	D207	H202	P204-A	LP226	KG242K-E	KJ234K	KF203-E	KJ203-E	KD201	KJ208	KJ219	KR209	DCX27#11*2

規格件表 ● CONVERSION CHART

規格件表 ● CONVERSION CHART

機型 MODEL	針板 NEEDLE PLATE	送具 FEED DOG		送具 FEED DOG	押具 PRESSER FOOT	勾針 LOOPER	針留 NEEDLE CLAMP	束子 COLLER	衝程 CRANK	衝程 CRANK	大心 Crankshaft	勾針連桿座 Upper Looper Holder	過線器 Bracket	下刀架 Lower Knife Holder	針號 NEEDLE
747K-514H4-24GA/P	E229	D202	D207	H202	P204P-A	LP226	KG242K-E	KJ234K	KF203-E	KJ203-E	KD201	KJ208	KJ219	KR209	DCX27#11*2
747K-514M2-24	E229	D210	D207	H204	P201-A	LP226	KG242K-E	KJ234K	KF203-E	KJ203-E	KD201	KJ208	KJ219	KR209	DCX27#11*2
747K-514M2-24CT	E229	D210	D207	H204	P201-A	LP226	KG242K-E	KJ234K	KF203-E	KJ203-E	KD201	KJ208	KJ219	KR209	DCX27#11*2
747K-514M2-24EC	E229	D210	D207	H204	P201-A	LP226	KG242K-E	KJ234K	KF203-E	KJ203-E	KD201	KJ208	KJ219	KR209	DCX27#11*2
747K-514M2-24LFC-3	E229	D210	D207	H204	P216-4	LP226	KG242K-E	KJ234K	KF203-E	KJ203-E	KD201	KJ208	KJ219	KR209	DCX27#11*2
747K-514M2-24LFC-3/EC	E229	D210	D207	H204	P216-4	LP226	KG242K-E	KJ234K	KF203-E	KJ203-E	KD201	KJ208	KJ219	KR209	DCX27#11*2
747K-514M2-24TG	E229	D210	D207	H204	P254J-4A	LP226	KG242K-E	KJ234K	KF203-E	KJ203-E	KD201	KJ208	KJ219	KR209	DCX27#11*2
747K-514M2-24TG/EC	E229	D210	D207	H204	P254J-4A	LP226	KG242K-E	KJ234K	KF203-E	KJ203-E	KD201	KJ208	KJ219	KR209	DCX27#11*2
747K-514M2-24VT	E229	D210	D207	H204	P201-A	LP226	KG242K-E	KJ234K	KF203-E	KJ203-E	KD201	KJ208	KJ219	KR209	DCX27#11*2
747K-514M2-24BK	E247	D203	D207	H203	P202-A	LP226	KG242K-E	KJ234K	KF203-E	KJ203-E	KD201	KJ208	KJ219	KR209	DCX27#11*2
747K-514M2-25	E208	D210	D207	H204	P201-A	LP226	KG242K-E	KJ234K	KF203-E	KJ203-E	KD201	KJ208	KJ219	KR209	DCX27#11*2
747K-514M2-25CT	E208	D210	D207	H204	P201-A	LP226	KG242K-E	KJ234K	KF203-E	KJ203-E	KD201	KJ208	KJ219	KR209	DCX27#11*2
747K-514M2-25TG	E208	D210	D207	H204	P254J-4A	LP226	KG242K-E	KJ234K	KF203-E	KJ203-E	KD201	KJ208	KJ219	KR209	DCX27#11*2
747K-514M2-28	E230	D210	D207	H204	P201-8A	LP227A	KG242K-E	KJ204K	KF203-E	KJ203-E	KD201A	KJ228	KJ238	KR209	DCX27#11*2
747K-514M4-23	E209	D210	D207	H204	P201-2A	LP226	KG242K-E	KJ234K	KF203-E	KJ203-E	KD201	KJ208	KJ219	KR209	DCX27#11*2
747K-514M4-23/CT	E209	D210	D207	H204	P201-2A	LP226	KG242K-E	KJ234K	KF203-E	KJ203-E	KD201	KJ208	KJ219	KR209	DCX27#11*2
747K-514M5-23BK	E210	D203	D207	H203	P202-A	LP226	KG242K-E	KJ234K	KF203-E	KJ203-E	KD201	KJ208	KJ219	KR209	DCX27#11*2
747K-514M5-23BK-1	E210	D203	D207	H203	P202-A	LP226	KG242K-E	KJ234K	KF203-E	KJ203-E	KD201	KJ208	KJ219	BK239	DCX27#11*2
747K-514M5-23BK/VT	E210	D203	D207	H203	P202-A	LP226	KG242K-E	KJ234K	KF203-E	KJ203-E	KD201	KJ208	KJ219	KR209	DCX27#11*2
747K-514M5-23BK-1/VT	E210	D203	D207	H203	P202-A	LP226	KG242K-E	KJ234K	KF203-E	KJ203-E	KD201	KJ208	KJ219	BK239	DCX27#11*2
747K-514M7-24	E226	D212	D207	H210	P201-A	LP230	KG242K-E	KJ204K	KF203-E	KJ203-E	KD201A	KJ228	KJ238	KR209	DCX27#16*2
747K-514M7-24BK	E247	D203	D207	H203	P202-A	LP230	KG242K-E	KJ204K	KF203-E	KJ203-E	KD201A	KJ228	KJ238	KR209	DCX27#16*2
747K-514M7-24BK-1	E247	D203	D207	H203	P202-A	LP230	KG242K-E	KJ204K	KF203-E	KJ203-E	KD201A	KJ228	KJ238	BK239	DCX27#16*2
747K-514M7-24CT	E226	D212	D207	H210	P201-A	LP230	KG242K-E	KJ204K	KF203-E	KJ203-E	KD201A	KJ228	KJ238	KR209	DCX27#16*2
747K-514M7-24TG	E226	D212	D207	H210	P254J-4A	LP230	KG242K-E	KJ204K	KF203-E	KJ203-E	KD201A	KJ228	KJ238	KR209	DCX27#16*2
747K-514M7-25	E225	D212	D207	H210	P201-A	LP230	KG242K-E	KJ204K	KF203-E	KJ203-E	KD201A	KJ228	KJ238	KR209	DCX27#16*2
747K-514M7-25BK	E248	D203	D207	H203	P202-A	LP230	KG242K-E	KJ204K	KF203-E	KJ203-E	KD201A	KJ228	KJ238	KR209	DCX27#16*2
747K-514M7-25BK-1	E248	D203	D207	H203	P202-A	LP230	KG242K-E	KJ204K	KF203-E	KJ203-E	KD201A	KJ228	KJ238	BK239	DCX27#16*2
747K-514M7-25CT	E225	D212	D207	H210	P201-A	LP230	KG242K-E	KJ204K	KF203-E	KJ203-E	KD201A	KJ228	KJ238	KR209	DCX27#16*2
747K-514M7-25TG	E225	D212	D207	H210	P254J-4A	LP230	KG242K-E	KJ204K	KF203-E	KJ203-E	KD201A	KJ228	KJ238	KR209	DCX27#16*2
757K-401M1/TW	E237	D219		H219	P506-A		KG253K-E	KJ204	KF203-E	KJ206-E	KD201	TW201			DCX27#14*1
757K-516H4-35GA	E213	D204	D207	H205	P508J-A	LP226	KG253K-E	KJ204	KF203-E	KJ206-E	KD201	KJ236	KJ219	KR219	DCX27#14*2
757K-516H4-35GA/EC	E213	D204	D207	H205	P508J-A	LP226	KG253K-E	KJ204	KF203-E	KJ206-E	KD201	KJ236	KJ219	KR219	DCX27#14*2

機 型 MODEL	針板 NEEDLE PLATE	送具 FEED DOG		送具 FEED DOG	押具 PRESSER FOOT	勾針 LOOPER	針留 NEEDLE CLAMP	束子 COLLER	衝程 CRANK	衝程 CRANK	大心 Crankshaft	勾針連桿座 Upper Looper Holder	過線器 Bracket	下刀架 Lower Knife Holder	針號 NEEDLE
757K-516H4-35GA/P	E213	D204	D207	H205	P508JP-A	LP226	KG253K-E	KJ204	KF203-E	KJ206-E	KD201	KJ236	KJ219	KR219	DCX27#14*2
757K-516H4-35GA/P/EC	E213	D204	D207	H205	P508JP-A	LP226	KG253K-E	KJ204	KF203-E	KJ206-E	KD201	KJ236	KJ219	KR219	DCX27#14*2
757K-516H4-55GA	E214	D205	D207	H206	P509J-A	LP226	KG255K-E	KJ204	KF203-E	KJ206-E	KD201	KJ236	KJ219	KR219	DCX27#14*2
757K-516H4-55GA/EC	E214	D205	D207	H206	P509J-A	LP226	KG255K-E	KJ204	KF203-E	KJ206-E	KD201	KJ236	KJ219	KR219	DCX27#14*2
757K-516H4-55GA/P	E214	D205	D207	H206	P509JP-A	LP226	KG255K-E	KJ204	KF203-E	KJ206-E	KD201	KJ236	KJ219	KR219	DCX27#14*2
757K-516H4-55GA/P/EC	E214	D205	D207	H206	P509JP-A	LP226	KG255K-E	KJ204	KF203-E	KJ206-E	KD201	KJ236	KJ219	KR219	DCX27#14*2
757K-516L1-24	E215	D206	D207	H207	P500J-A	LP225	KG252K-E	KJ204	KF203-E	KJ206-E	KD201	KJ236	KJ219	KR219	DCX27#14*2
757K-516L1-24CT	E215	D206	D207	H207	P500J-A	LP225	KG252K-E	KJ204	KF203-E	KJ206-E	KD201	KJ236	KJ219	KR219	DCX27#14*2
757K-516L1-35	E216	D206	D207	H212	P504J-A	LP225	KG253K-E	KJ204	KF203-E	KJ206-E	KD201	KJ236	KJ219	KR219	DCX27#14*2
757K-516L1-35CT	E216	D206	D207	H212	P504J-A	LP225	KG253K-E	KJ204	KF203-E	KJ206-E	KD201	KJ236	KJ219	KR219	DCX27#14*2
757K-516M2-35	E217	D208	D207	H208	P504J-A	LP226	KG253K-E	KJ204	KF203-E	KJ206-E	KD201	KJ236	KJ219	KR219	DCX27#14*2
757K-516M2-35CT	E217	D208	D207	H208	P504J-A	LP226	KG253K-E	KJ204	KF203-E	KJ206-E	KD201	KJ236	KJ219	KR219	DCX27#14*2
757K-516M2-35PS	E227	D208	D207	H214	P504JS-A	LP226	KG253K-E	KJ204	KF203-E	KJ206-E	KD201	KJ236	KJ219	KR219	DCX27#14*2
757K-516M2-35PS/EC	E227	D208	D207	H214	P504JS-A	LP226	KG253K-E	KJ204	KF203-E	KJ206-E	KD201	KJ236	KJ219	KR219	DCX27#14*2
757K-516M2-55	E218	D208	D207	H209	P502J-A	LP226	KG255K-E	KJ204	KF203-E	KJ206-E	KD201	KJ236	KJ219	KR219	DCX27#14*2
757K-516M2-55CT	E218	D208	D207	H209	P502J-A	LP226	KG255K-E	KJ204	KF203-E	KJ206-E	KD201	KJ236	KJ219	KR219	DCX27#14*2
757K-516M2-55EC	E218	D208	D207	H209	P502J-A	LP226	KG255K-E	KJ204	KF203-E	KJ206-E	KD201	KJ236	KJ219	KR219	DCX27#14*2
757K-516M2-55PS	E228	D208	D207	H215	P502JS-A	LP226	KG255K-E	KJ204	KF203-E	KJ206-E	KD201	KJ236	KJ219	KR219	DCX27#14*2
757K-516M2-55PS/EC	E228	D208	D207	H215	P502JS-A	LP226	KG255K-E	KJ204	KF203-E	KJ206-E	KD201	KJ236	KJ219	KR219	DCX27#14*2
757K-401M2-50TA	E238	D211	D222	H216	P223-A		KG256K-E	KJ204	KF203-E	KJ206-E	KD201	TW201		KR219	DCX27#14*2
757K-401M2-50TA/EC	E238	D211	D222	H216	P223-A		KG256K-E	KJ204	KF203-E	KJ206-E	KD201	TW201		KR219	DCX27#14*2
767K-516M2-324	E219	D208	D207	H209	P233J-A	LP226	KG433K-E	KJ234K	KF203-E	KJ203-E	KD201	KJ208	KJ219	KR219	DCX27#11*3
767K-516M2-324/CT	E219	D208	D207	H209	P233J-A	LP226	KG433K-E	KJ234K	KF203-E	KJ203-E	KD201	KJ208	KJ219	KR219	DCX27#11*3
767K-516M2-524	E224	D208	D207	H209	P255J-A	LP226	KG455K-E	KJ234K	KF203-E	KJ203-E	KD201	KJ208	KJ219	KR219	DCX27#11*3
767K-516M2-524/CT	E224	D208	D207	H209	P255J-A	LP226	KG455K-E	KJ234K	KF203-E	KJ203-E	KD201	KJ208	KJ219	KR219	DCX27#11*3

規格件表 ● CONVERSION CHART