SiRUBA®

銀箭牌工業用縫紉機

INDUSTRIAL SEWING MACHINE

700F

零件圖 PARTS LIST

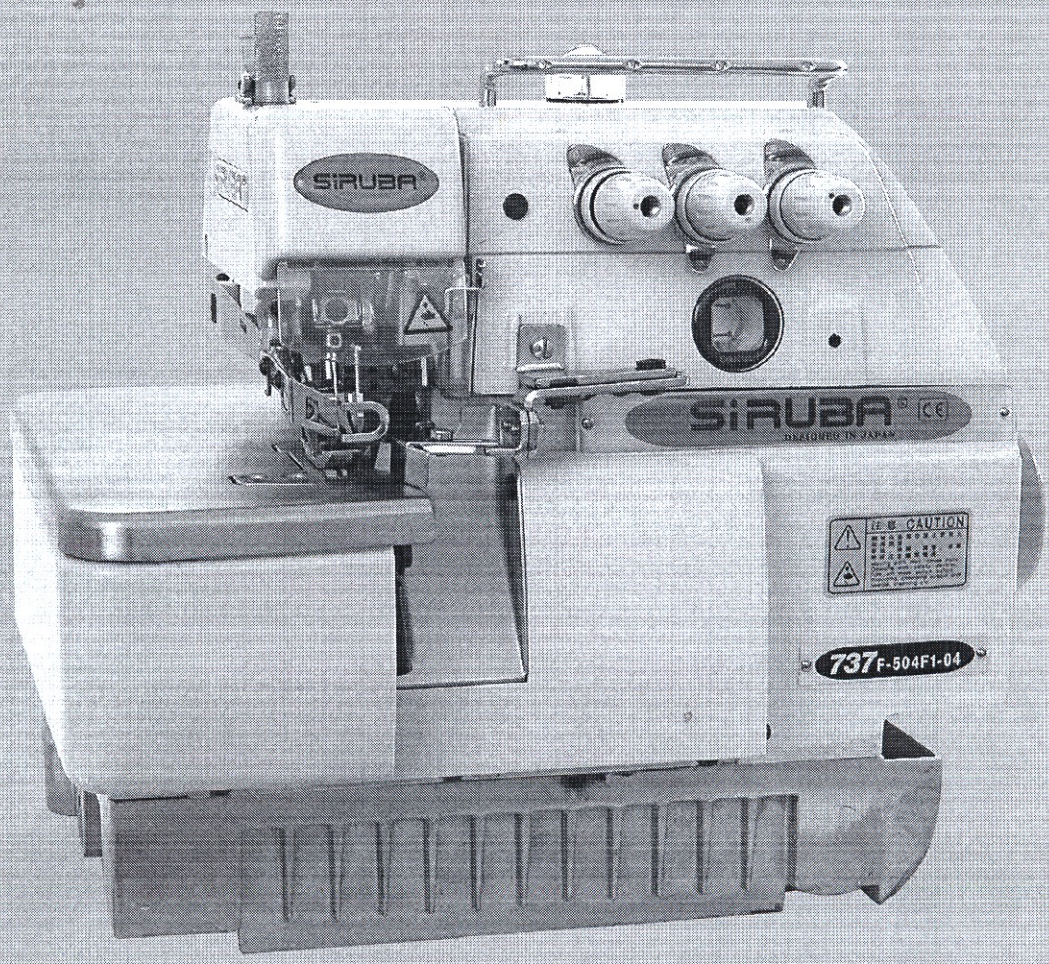

CE

高林股份有限公司
KAULIN MFG. CO., LTD.

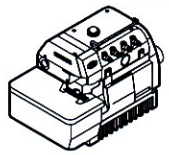
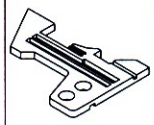
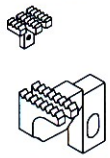
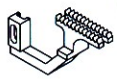

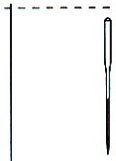

機　型 MODEL	針板 NEEDLE PLATE	送具 FEED DOG		送具 FEED DOG	押具 PRESSER FOOT	勾針 LOOPER	針留 NEEDLE CLAMP	束子 COLLAR	衝程 CRANK	衝程 CRANK	針號 NEEDLE
737F-504M1-15	E934D	D438	D912	H442	P152D-2	LP26	KG131-E	KJ10F	KF25-A	KJ09B-E	DC27 #9
737F-504M2-04	E800	D440	D095	H445	P253E-3	LP26	KG131-E	KJ10F	KF25-A	KJ09B-E	DC27 #11
737F-504M2-04CT	E800C	D440	D095	H445	P253E-3	LP26	KG131-E	KJ10F	KF25-A	KJ09B-E	DC27 #11
737F-504M2-04LFC-2	E800	D440	D095	H445	P101-3	LP26	KG131-E	KJ10F	KF25-A	KJ09B-E	DC27 #11
737F-504M2-04LFC-2/EC	E800C	D440	D095	H445	P101-3	LP26	KG131-E	KJ10F	KF25-A	KJ09B-E	DC27 #11
737F-504M2-04TR	E011	D015	D011	H445	P101-3	LP26	KG131-E	KJ10F	KF25-A	KJ09B-E	DC27 #11
737F-504M2-04VT	E800	D440	D095	H445	P253E-3	LP26	KG131-E	KJ10F	KF25-A	KJ09B-E	DC27 #11
737F-504M2-04WR/LF-B	E001					LP26	KG131-E	KJ10F	KF25-A	KJ09B-E	DC27 #11
737F-504M3-05PZ	E797	D440	D674	H445	PZ01-A	LP26	KG131-E	KJ10F	KF25-A	KJ09B-E	DC27 #18
737F-504M3-05	E797	D440	D674	H445	P230-3	LP26	KG131-E	KJ10F	KF25-A	KJ09B-E	DC27 #11
737F-504M3-05CT	E797C	D440	D674	H445	P230-3	LP26	KG131-E	KJ10F	KF25-A	KJ09B-E	DC27 #11
737F-504M3-05VT	E797	D440	D674	H445	P230-3	LP26	KG131-E	KJ10F	KF25-A	KJ09B-E	DC27 #11
737F-504M5-04BK	E589F	D969	D675	H974	P975-3	LP26	KG131-E	KJ10F	KF25-A	KJ09B-E	DC27 #11
737F-504M5-04BK/VT	E589F	D969	D675	H974	P975-3	LP26	KG131-E	KJ10F	KF25-A	KJ09B-E	DC27 #11
737F-505F1-04	E784	D438	D674	H442	P152D-3	LP26	KG131-E	KJ10F	KF25-A	KJ09B-E	DC27 #9
737F-505F1-04ES	E784	D438	D674	H442	P152D-3	LP26	KG131-E	KJ10F	KF25-A	KJ09B-E	DC27 #9
737F-505F1-04VT	E784	D438	D674	H442	P152D-3	LP26	KG131-E	KJ10F	KF25-A	KJ09B-E	DC27 #9
737F-504M3-04	E796	D440	D674	H445	P230-3	LP26	KG131-E	KJ10F	KF25-A	KJ09B-E	DC27 #11
737F-505F1-04ES/VT	E784	D438	D674	H442	P152D-3	LP26	KG131-E	KJ10F	KF25-A	KJ09B-E	DC27 #9
737F-504M2-04EC	E800C	D440	D095	H445	P253E-3	LP26	KG131-E	KJ10F	KF25-A	KJ09B-E	DC27 #11
737F-504M1-15VT	E934D	D438	D912	H442	P152D-5	LP26	KG131-E	KJ10F	KF25-A	KJ09B-E	DC27 #9
737F-504M2-04TR/EC	E011C	D011	D015	H445	P101-3	LP26	KG131-E	KJ10F	KF25-A	KJ09B-E	DC27 #11
737F-504F1-04	E784	D438	D674	H442	P152D-3	LP26	KG131-E	KJ10F	KF25-A	KJ09B-E	DC27 #9

規格件表 CONVERSION CHART

型別件對照表 MODEL COMPARE LIST

機型 MODEL	針板 NEEDLE PLATE	送具 FEED DOG		送具 FEED DOG	押具 PRESSER FOOT	勾針 LOOPER	針留 NEEDLE CLAMP	束子 COLLAR	衝程 CRANK	衝程 CRANK	針號 NEEDLE
737F-504F1-15	E471	D471	D472	P471-A	LP26	KG131-E	KG131-E	KJ10F	KF25-A	KJ09B-E	DC27 #9
747F-512M1-25	E920	D440	D095	H445	P253E-4	LP36	KG142-E	KJ13F	KF26-A	KJ11B-E	DC27 #11*2
747F-512M1-25CT	E920C	D440	D095	H445	P253E-4	LP36	KG142-E	KJ13F	KF26-A	KJ11B-E	DC27 #11*2
747F-514H4-24GA	E919	D958	D095	H959	P136-A	LP26	KG142-E	KJ13F	KF26-A	KJ11B-E	DC27 #11*2
747F-514H4-24GA/CT	E919C	D958	D095	H959	P136-A	LP26	KG142-E	KJ13F	KF26-A	KJ11B-E	DC27 #11*2
747F-514H4-24GA/EC	E919C	D958	D095	H959	P136-A	LP26	KG142-E	KJ13F	KF26-A	KJ11B-E	DC27 #11*2
747F-514H4-24GA/P	E919	D958	D095	H959	P136P-A	LP26	KG142-E	KJ13F	KF26-A	KJ11B-E	DC27 #11*2
747F-514M2-24	E919	D440	D095	H445	P253E-4	LP26	KG142-E	KJ13F	KF26-A	KJ11B-E	DC27 #11*2
747F-514M2-24CT	E919C	D440	D095	H445	P253E-4	LP26	KG142-E	KJ13F	KF26-A	KJ11B-E	DC27 #11*2
747F-514M2-24EC	E919C	D440	D095	H445	P253E-4	LP26	KG142-E	KJ13F	KF26-A	KJ11B-E	DC27 #11*2
747F-514M2-24LF-B	E919	D440	D095	H445	P101-4	LP26	KG142-E	KJ13F	KF26-A	KJ11B-E	DC27 #11*2
747F-514M2-24LFC-2	E919	D440	D095	H445	P101-4	LP26	KG142-E	KJ13F	KF26-A	KJ11B-E	DC27 #11*2
747F-514M2-24LFC-2/EC	E919C	D440	D095	H445	P101-4	LP26	KG142-E	KJ13F	KF26-A	KJ11B-E	DC27 #11*2
747F-514M2-24TG	E919	D440	D095	H445	P254G-4	LP26	KG142-E	KJ13F	KF26-A	KJ11B-E	DC27 #11*2
747F-514M2-24TG/EC	E919C	D440	D095	H445	P254G-4	LP26	KG142-E	KJ13F	KF26-A	KJ11B-E	DC27 #11*2
747F-514M2-24VT	E919	D440	D095	H445	P253E-4	LP26	KG142-E	KJ13F	KF26-A	KJ11B-E	DC27 #11*2
747F-514M2-25TG	E920	D440	D095	H445	P253G-4	LP26	KG142-E	KJ13F	KF26-A	KJ11B-E	DC27 #11*2
747F-514M2-25	E920C	D440	D095	H445	P253E-4	LP26	KG142-E	KJ13F	KF26-A	KJ11B-E	DC27 #11*2
747F-514M2-25CT	E920C	D440	D095	H445	P253E-4	LP26	KG142-E	KJ13F	KF26-A	KJ11B-E	DC27 #11*2
747F-514M4-23	E804	D440	D674	H445	P230-A	LP26	KG142-E	KJ13F	KF25-A	KJ11B-E	DC27 #11*2
747F-514M4-23CT	E804C	D440	D674	H445	P230-A	LP26	KG142-E	KJ13F	KF25-A	KJ11B-E	DC27 #11*2
747F-514M5-23BK	E591B	D969	D657	H974	P975-4	LP26	KG142-E	KJ13F	KF26-A	KJ11B-E	DC27 #11*2
747F-514M7-23	E804A	D441	D674	H446	P230-A	LP38	KG142-E	KJ13F	KF26-A	KJ11B-E	DC27 #16*2

機型 MODEL	針板 NEEDLE PLATE	送具 FEED DOG		送具 FEED DOG	押具 PRESSER FOOT	勾針 LOOPER	針留 NEEDLE CLAMP	束子 COLLAR	衝程 CRANK	衝程 CRANK	針號 NEEDLE
747F-514M7-23CT	E804AC	D441	D674	H446	P230-A	LP38	KG142-E	KJ13F	KF26-A	KJ11B-E	DC27 #11*2
747F-514M7-24	E919A	D441	D095	H446	P253E-4	LP38	KG142-E	KJ13F	KF26-A	KJ11B-E	DC27 #16*2
747F-514M7-24CT	E919AC	D441	D095	H446	P253E-4	LP38	KG142-E	KJ13F	KF26-A	KJ11B-E	DC27 #16*2
747F-514M7-25	E920A	D441	D095	H446	P253E-4	LP38	KG142-E	KJ13F	KF26-A	KJ11B-E	DC27 #16*2
747F-514M7-25CT	E920AC	D441	D095	H446	P253E-4	LP38	KG142-E	KJ13F	KF26-A	KJ11B-E	DC27 #16*2
747F-514M7-24TG	E919A	D441	D095	H446	P254G-4	LP38	KG142-E	KJ13F	KF26-A	KJ11B-E	DC27 #16*2
747F-514M7-25TG	E920A	D441	D095	H446	P254G-4	LP38	KG142-E	KJ13F	KF26-A	KJ11B-E	DC27 #16*2
747F-514F1-24	E990	D438	D674	H442	P152D-4	LP26	KG142-E	KJ13F	KF26-A	KJ11B-E	DC27 #11*2
747F-514M5-23BK/VT	E591B	D675	D969	H974	P975-4	LP26	KG142-E	KJ13F	KF26-A	KJ11B-E	DC27 #11*2
747F-512M1-34	E832	D440	D095	H447	P253E-A	LP36	KG143-E	KJ13F	KF26-A	KJ11B-E	DC27 #14*2
757F-401M1/TW	E110			H101	P767-A	LP26	KG153-E		KF26-A		DC27 #14*2
757F-401M2-50TA	E005	D005	D006	H005	P005-A		TA155-E		KF26-A		DC27 #14*2
757F-401M2-50TA/EC	E005C	D005	D006	H005	P005-A		TA155-E		KF26-A		DC27 #14*2
757F-516H2-56	E868	D490	D502	H501	P502-A	LP38	KG155-E	KJ13F	KF26-A	KJ11B-E	DC27 #18*2
757F-516H2-56CT	E868C	D490	D502	H501	P502-A	LP38	KG155-E	KJ13F	KF26-A	KJ11B-E	DC27 #18*2
757F-516H4-35GA	E982	D008	D502	H957	P508-A	LP26	KG153-E	KJ10F	KF25-A	KJ09B-E	DC27 #14*2
757F-516H4-35GA/EC	E982C	D008	D502	H957	P508-A	LP26	KG153-E	KJ10F	KF25-A	KJ09B-E	DC27 #14*2
757F-516H4-35GA/P	E982	D008	D502	H957	P508P-A	LP26	KG153-E	KJ10F	KF25-A	KJ09B-E	DC27 #14*2
757F-516H4-35GA/P/EC	E982C	D008	D502	H957	P508P-A	LP26	KG153-E	KJ10F	KF25-A	KJ09B-E	DC27 #14*2
757F-516H4-55GA	E986	D956	D502	H957	P509-A	LP26	KG155-E	KJ10F	KF25-A	KJ09B-E	DC27 #14*2
757F-516H4-55GA/EC	E986C	D956	D502	H957	P509-A	LP26	KG155-E	KJ10F	KF25-A	KJ09B-E	DC27 #14*2
757F-516H4-55GA/P	E986	D956	D502	H957	P509P-A	LP26	KG155-E	KJ10F	KF25-A	KJ09B-E	DC27 #14*2
757F-516H4-55GA/P/EC	E986C	D956	D502	H957	P509P-A	LP26	KG155-E	KJ10F	KF25-A	KJ09B-E	DC27 #14*2

規格件表 CONVERSION CHART

型別件對照表 MODEL COMPARE LIST

機型 MODEL	針板 NEEDLE PLATE	送具 FEED DOG		送具 FEED DOG	押具 PRESSER FOOT	勾針 LOOPER	針留 NEEDLE CLAMP	束子 COLLER	衝程 CRANK	衝程 CRANK	針號 NEEDLE
757F-516L1-24	E834	D487	D060	H492	P500-A	LP26	KG152-E	KJ10F	KF25-A	KJ09B-E	DC27 #14*2
757F-516L1-24CT	E834C	D487	D060	H492	P500-A	LP26	KG152-E	KJ10F	KF25-A	KJ09B-E	DC27 #14*2
757F-516L1-35	E839	D487	D060	H492	P504-A	LP26	KG153-E	KJ10F	KF25-A	KJ09B-E	DC27 #14*2
757F-516L1-35CT	E839C	D487	D060	H492	P504-A	LP26	KG153-E	KJ10F	KF25-A	KJ09B-E	DC27 #14*2
757F-516M2-35	E982	D489	D502	H497	P504-A	LP26	KG153-E	KJ10F	KF25-A	KJ11B-E	DC27 #14*2
757F-516M2-35CT	E982C	D489	D502	H497	P504-A	LP26	KG153-E	KJ10F	KF25-A	KJ11B-E	DC27 #14*2
757F-516M2-35PS	E982S	D489	D502	H497	P504S-A	LP26	KG153-E	KJ10F	KF25-A	KJ11B-E	DC27 #14*2
757F-516M2-35PS/EC	E982SC	D489	D502	H497	P504S-A	LP26	KG153-E	KJ10F	KF25-A	KJ11B-E	DC27 #14*2
757F-516M2-55	E986	D489	D502	H500	P502-A	LP26	KG155-E	KJ10F	KF25-A	KJ11B-E	DC27 #14*2
757F-516M2-55CT	E986C	D489	D502	H500	P502-A	LP26	KG155-E	KJ10F	KF25-A	KJ11B-E	DC27 #14*2
757F-516M2-55PS	E986S	D489	D502	H497	P502S-A	LP26	KG155-E	KJ10F	KF25-A	KJ11B-E	DC27 #14*2
757F-516M2-55PS/EC	E986SC	D489	D502	H497	P502S-A	LP26	KG155-E	KJ10F	KF25-A	KJ11B-E	DC27 #14*2
757F-516X2-56	E870	D490	D502	H501	P960-A	LP38	KG155-E	KJ13F	KF26-A	KJ11B-E	DC27 #18*2
757F-516X2-56CT	E870C	D490	D502	H501	P960-A	LP38	KG155-E	KJ13F	KF26-A	KJ11B-E	DC27 #18*2
757F-516X3-56	E870	D490	D502	H501	P960-A	LP38	KG155A-E	KJ13F	KF26-A	KJ11B-E	TVX64#21*2
757F-516X3-56CT	E870C	D490	D502	H501	P960-A	LP38	KG155A-E	KJ13F	KF26-A	KJ11B-E	TVX64#21*2
757F-516M2-55/EC	E986C	D489	D502	H500	P502-A	LP26	KG155-E	KJ13F	KF25-A	KJ11B-E	DC27 #14*2
757F-401M1/TW/CT	E110C			H101	P767-A	LP26	KG153-E	KJ13F	KF25-A	KJ09B-E	DC27 #14*2
767F-516M2-324	E989	D971	D502	H497	P233-A	LP26	KG333-E	KJ13F	KF26-A	KJ11B-E	DC27 #11*3
767F-516M2-324/CT	E989C	D971	D502	H497	P233-A	LP26	KG333-E	KJ13F	KF26-A	KJ11B-E	DC27 #11*3
767F-516M2-524	E988	D972	D502	H500	P255-A	LP26	KG355-E	KJ13F	KF26-A	KJ11B-E	DC27 #11*3
767F-516M2-524CT	E988C	D972	D502	H500	P255-A	LP26	KG355-E	KJ13F	KF26-A	KJ11B-E	DC27 #11*3

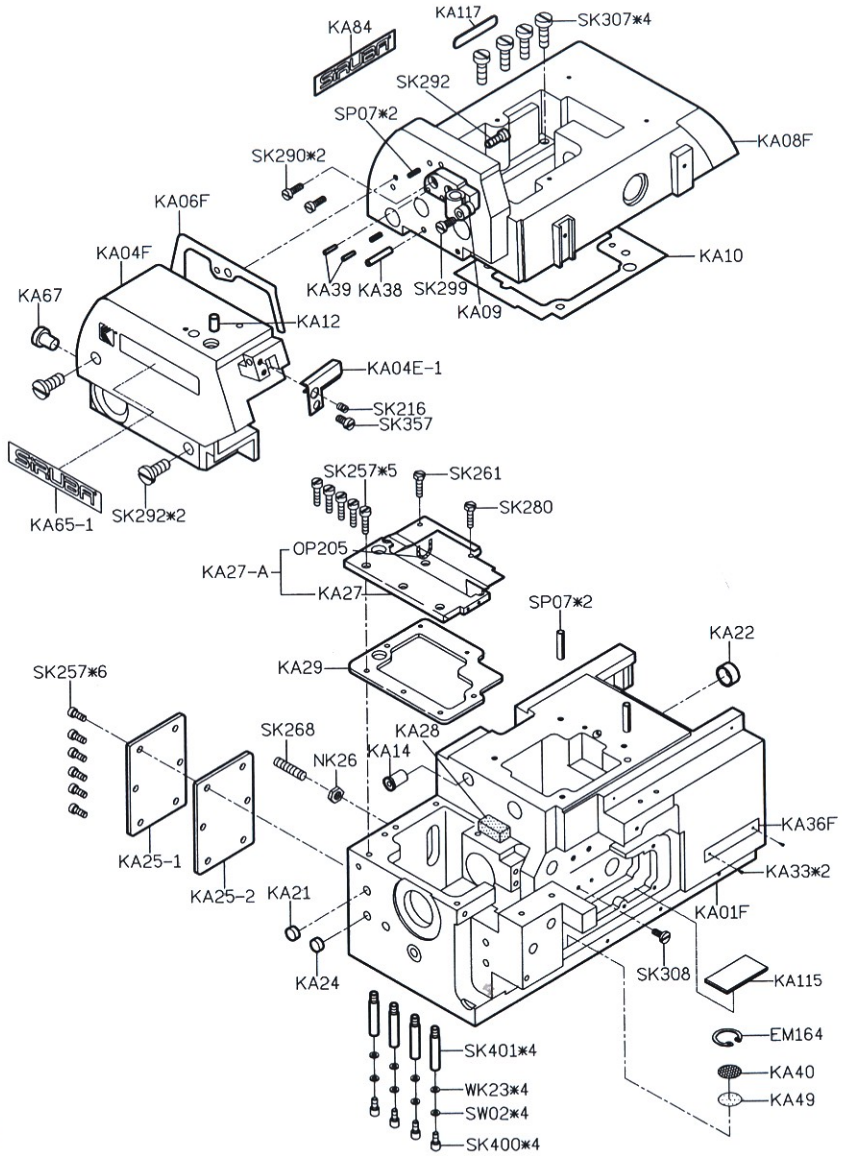

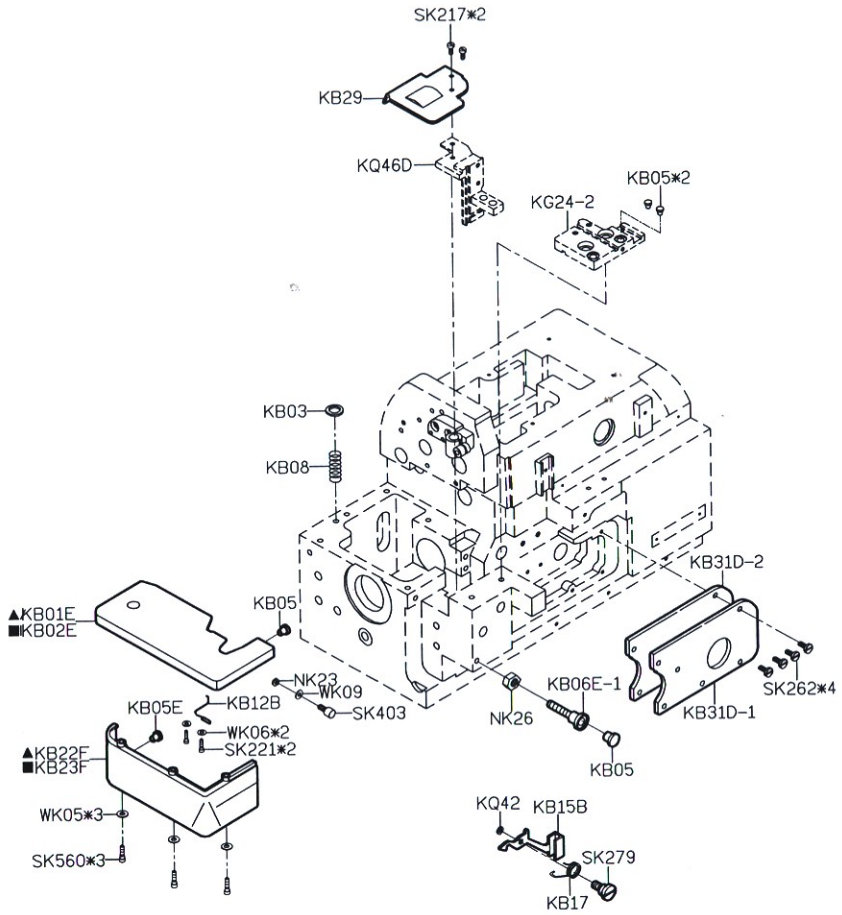

PARTS LIST FOR KA GROUP

PARTS LIST FOR KB GROUP

PARTS LIST FOR KC GROUP

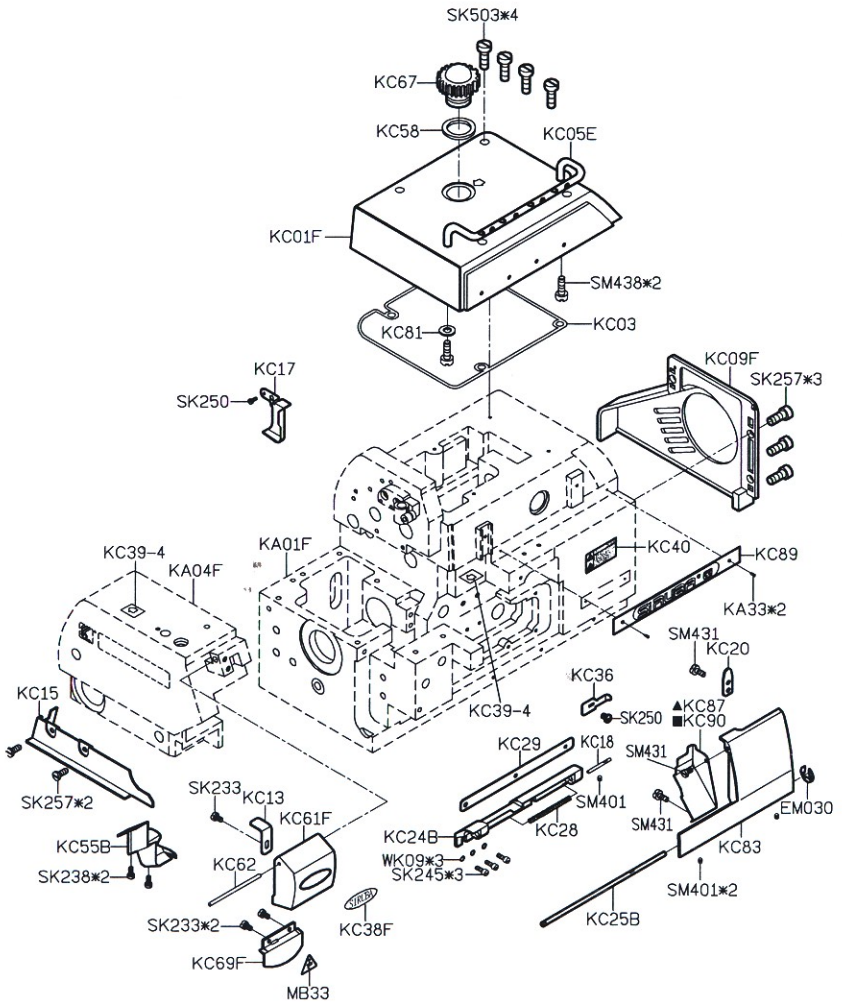

PARTS LIST FOR KD GROUP

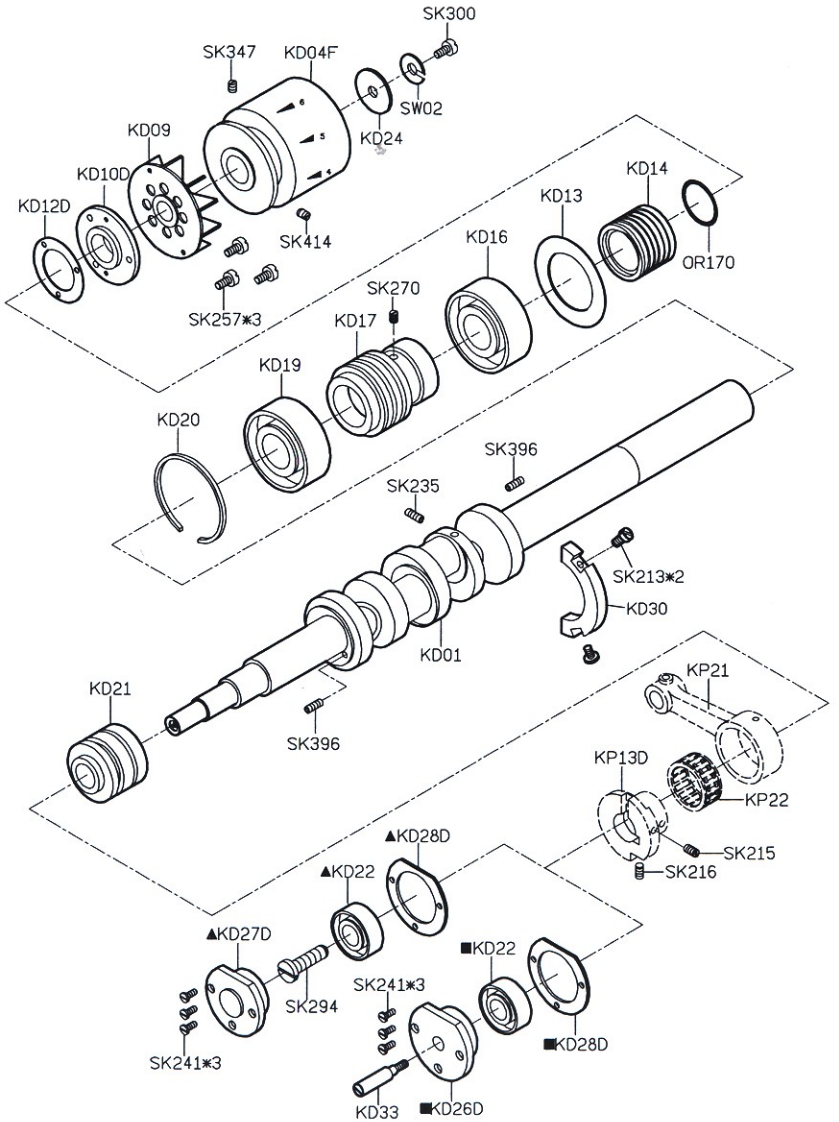

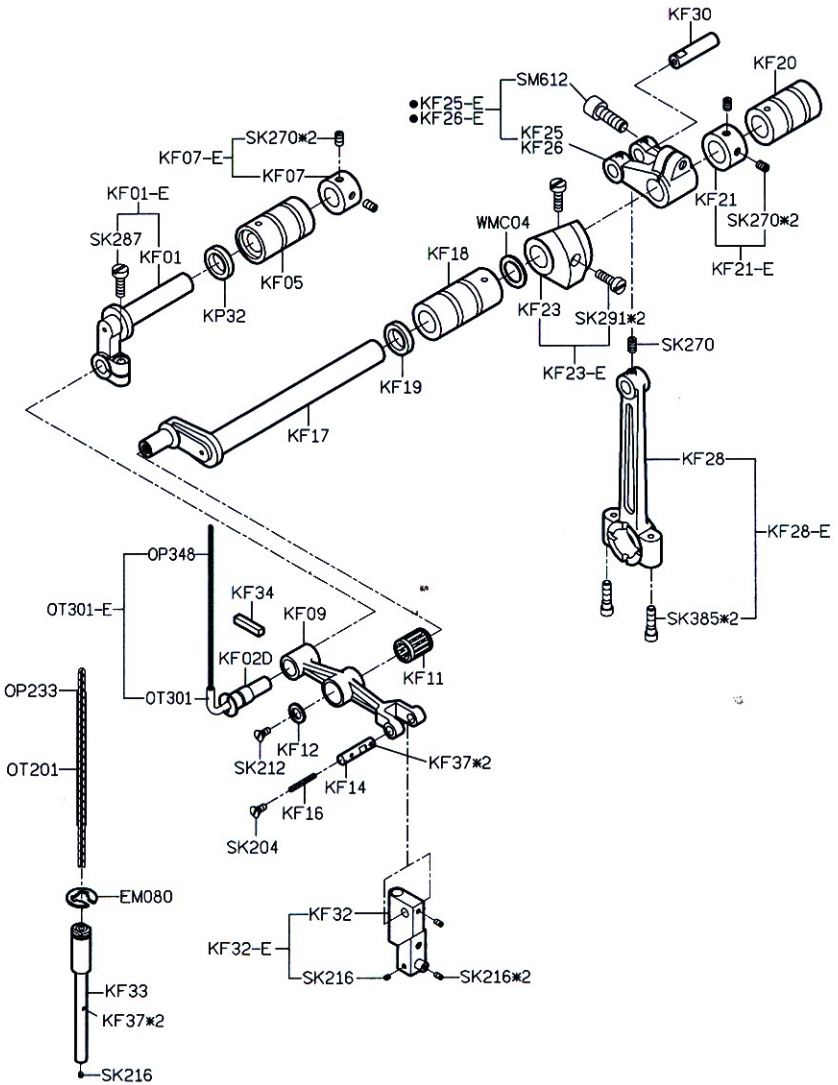

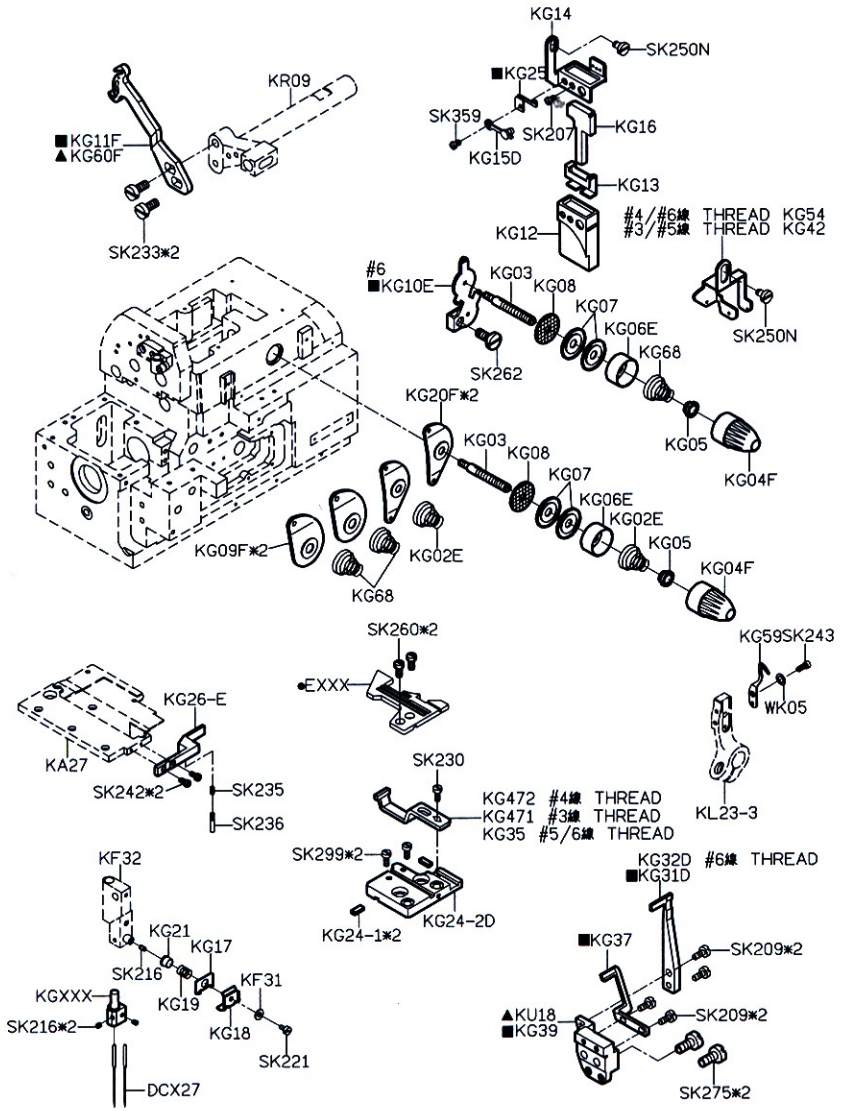

PARTS LIST FOR KF GROUP

PARTS LIST FOR KG GROUP

PARTS LIST FOR KJ GROUP

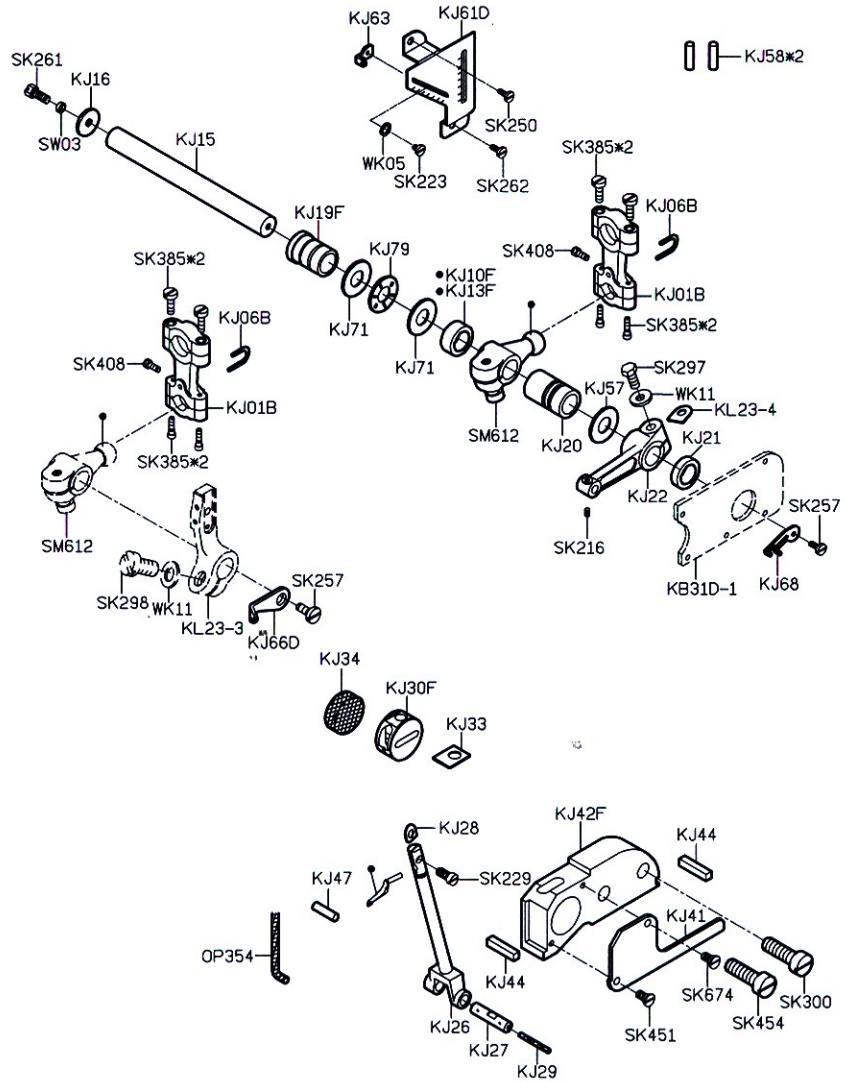

PARTS LIST FOR KL GROUP

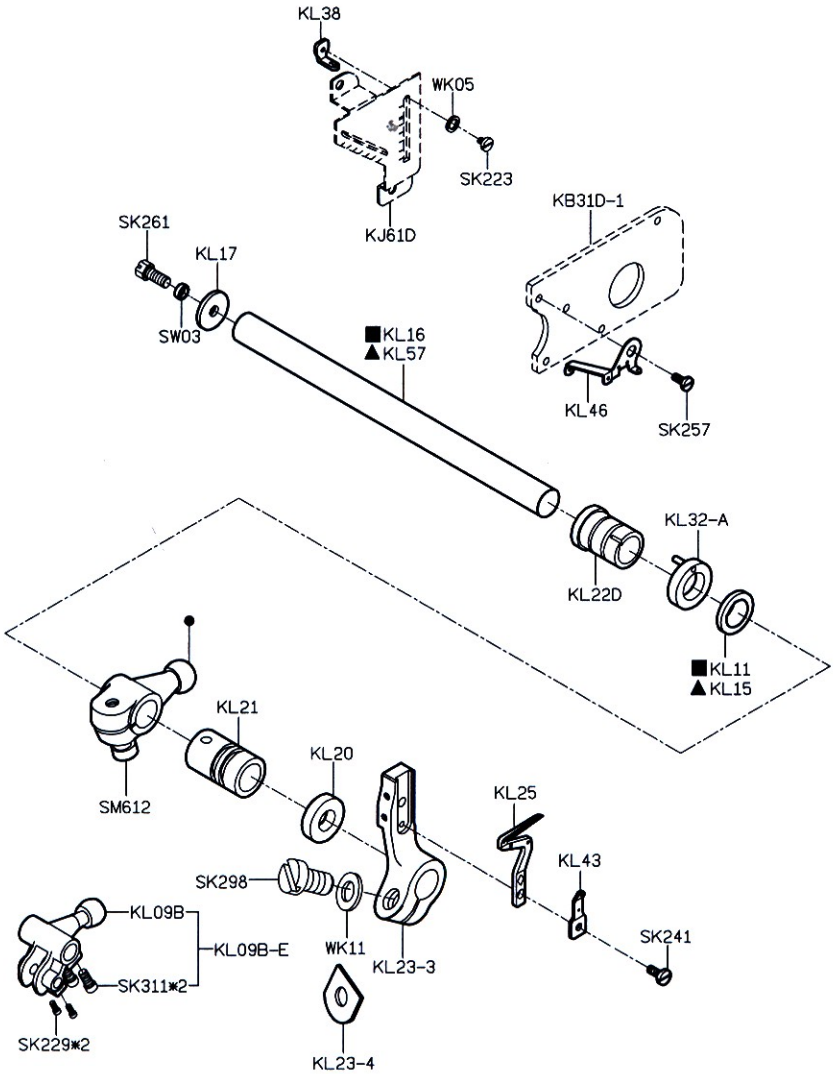

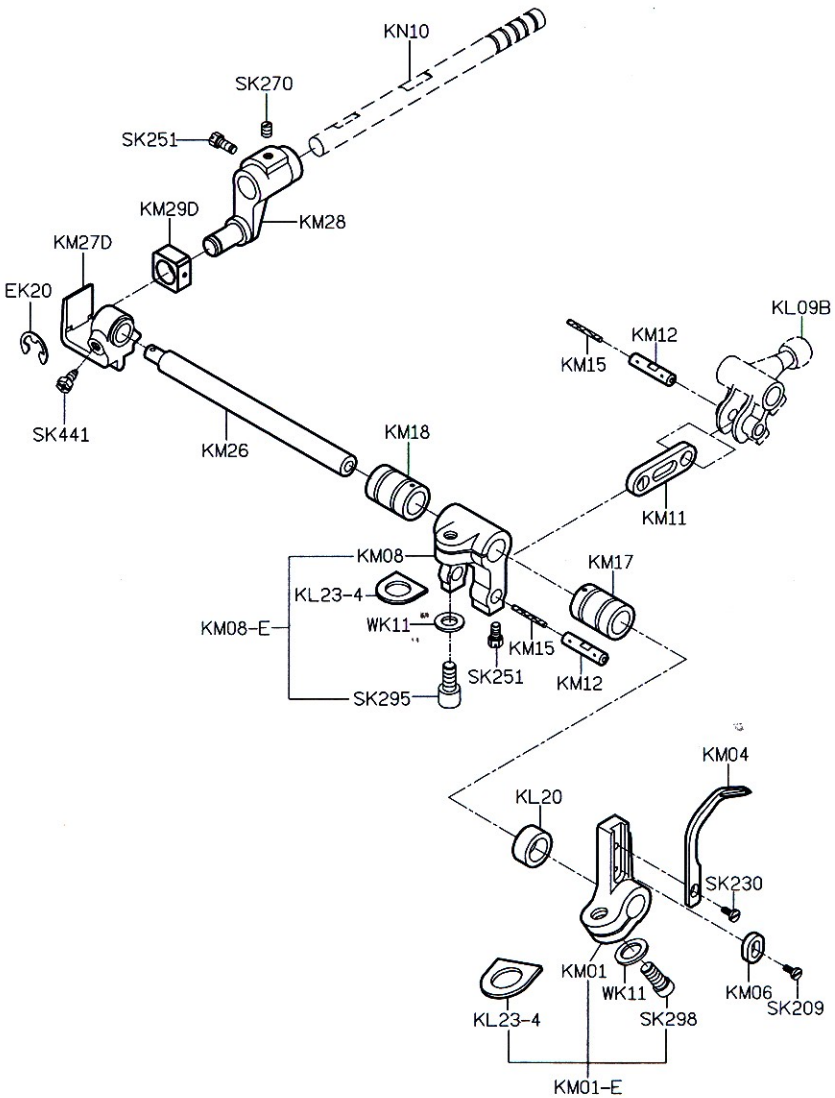

PARTS LIST FOR KM GROUP

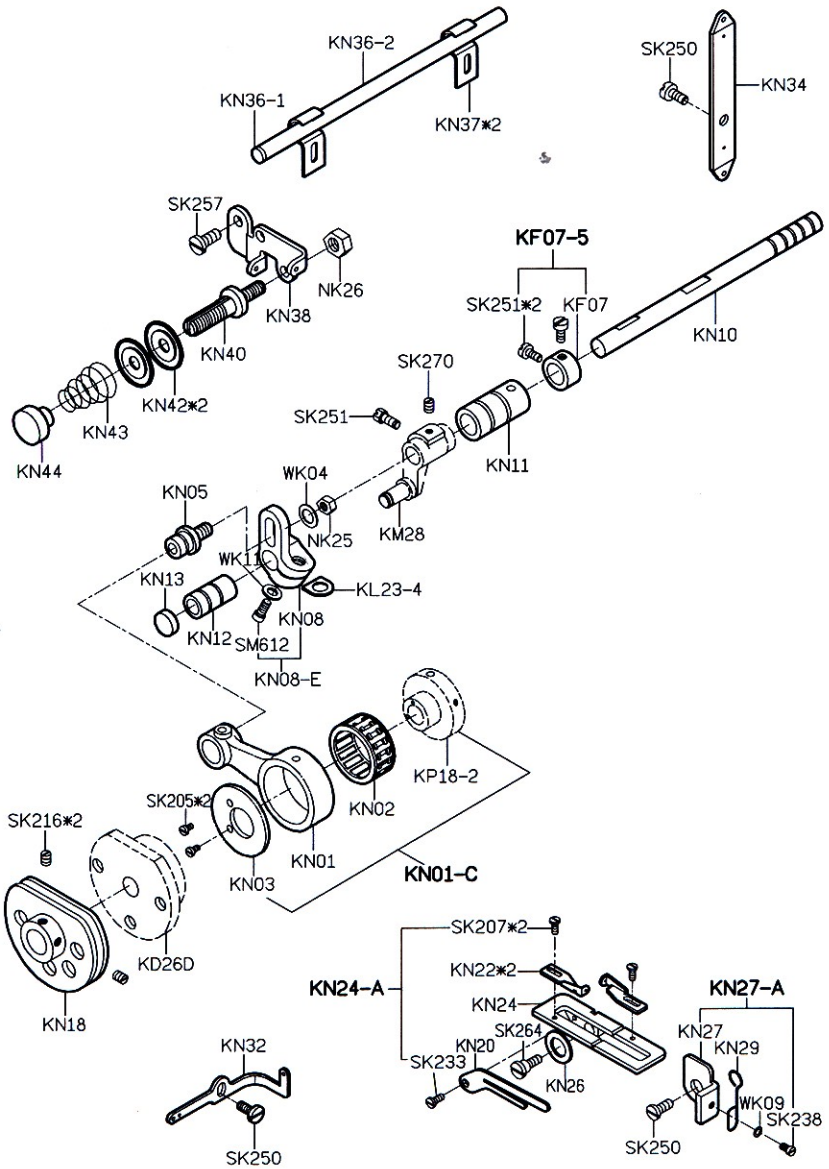

PARTS LIST FOR KN GROUP

PARTS LIST FOR KP GROUP

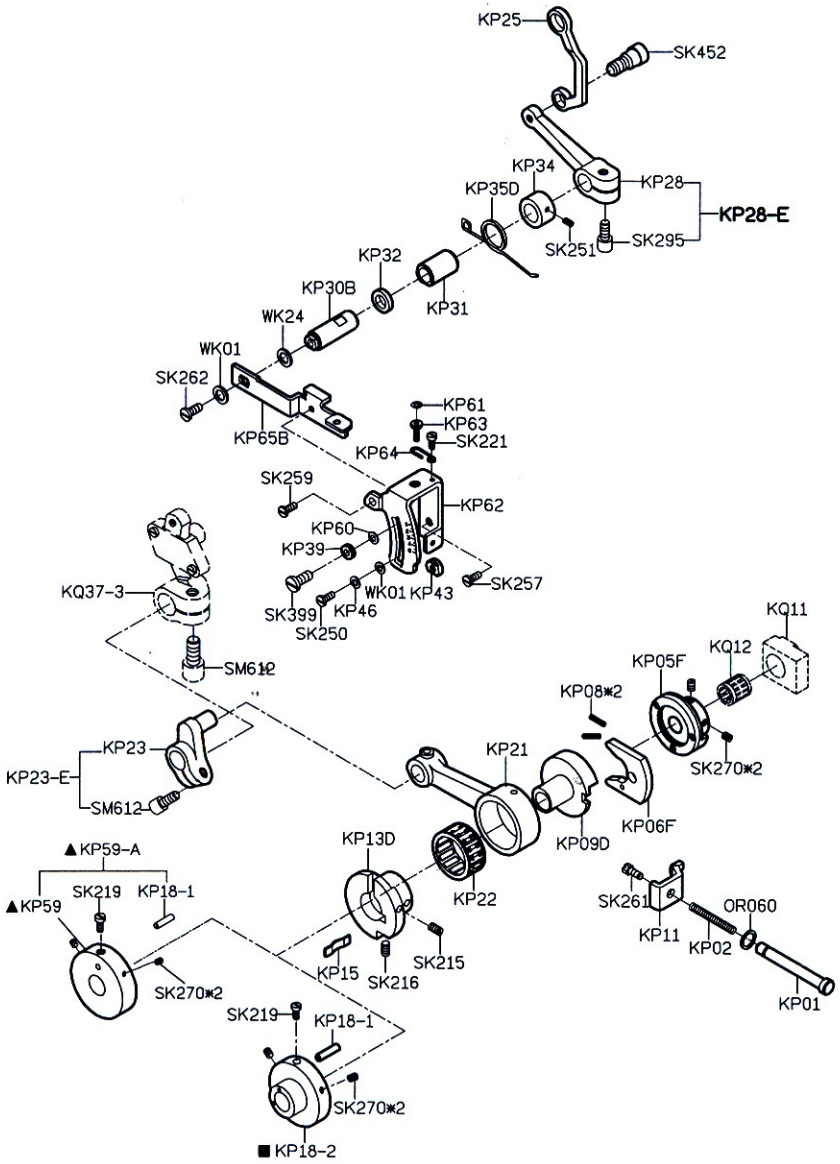

PARTS LIST FOR KQ GROUP

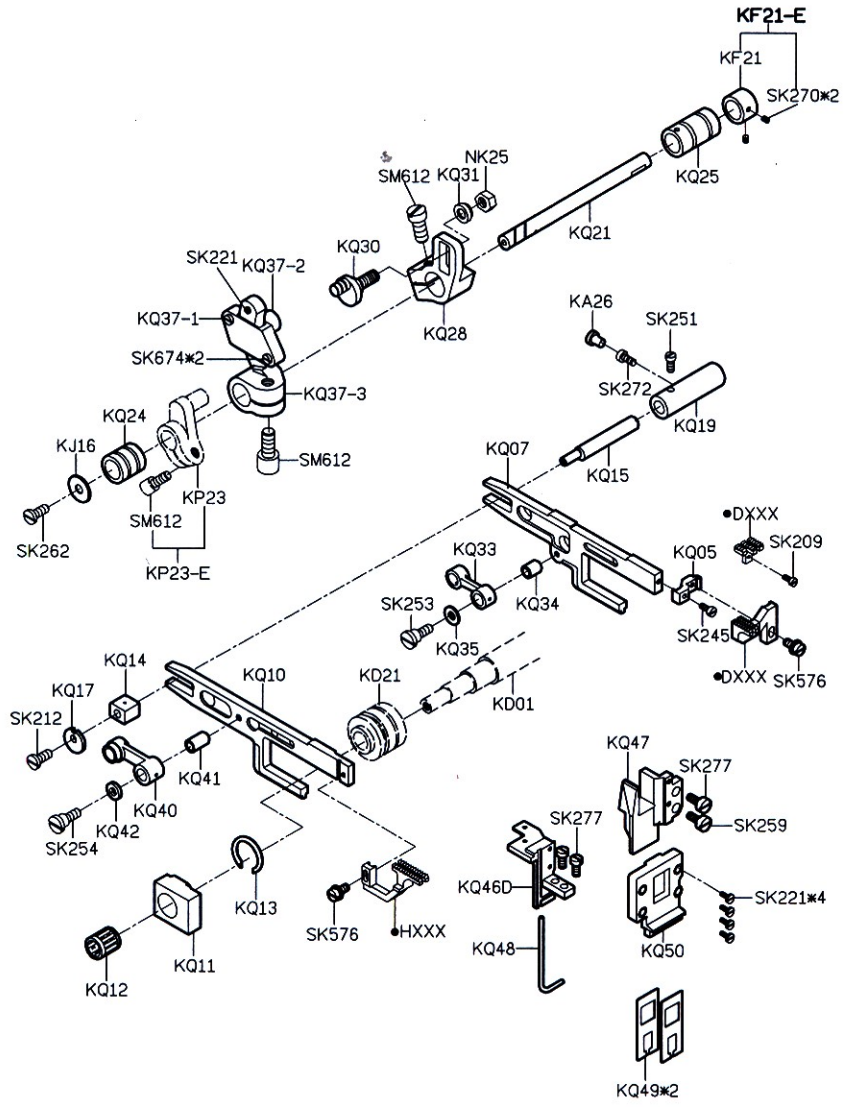

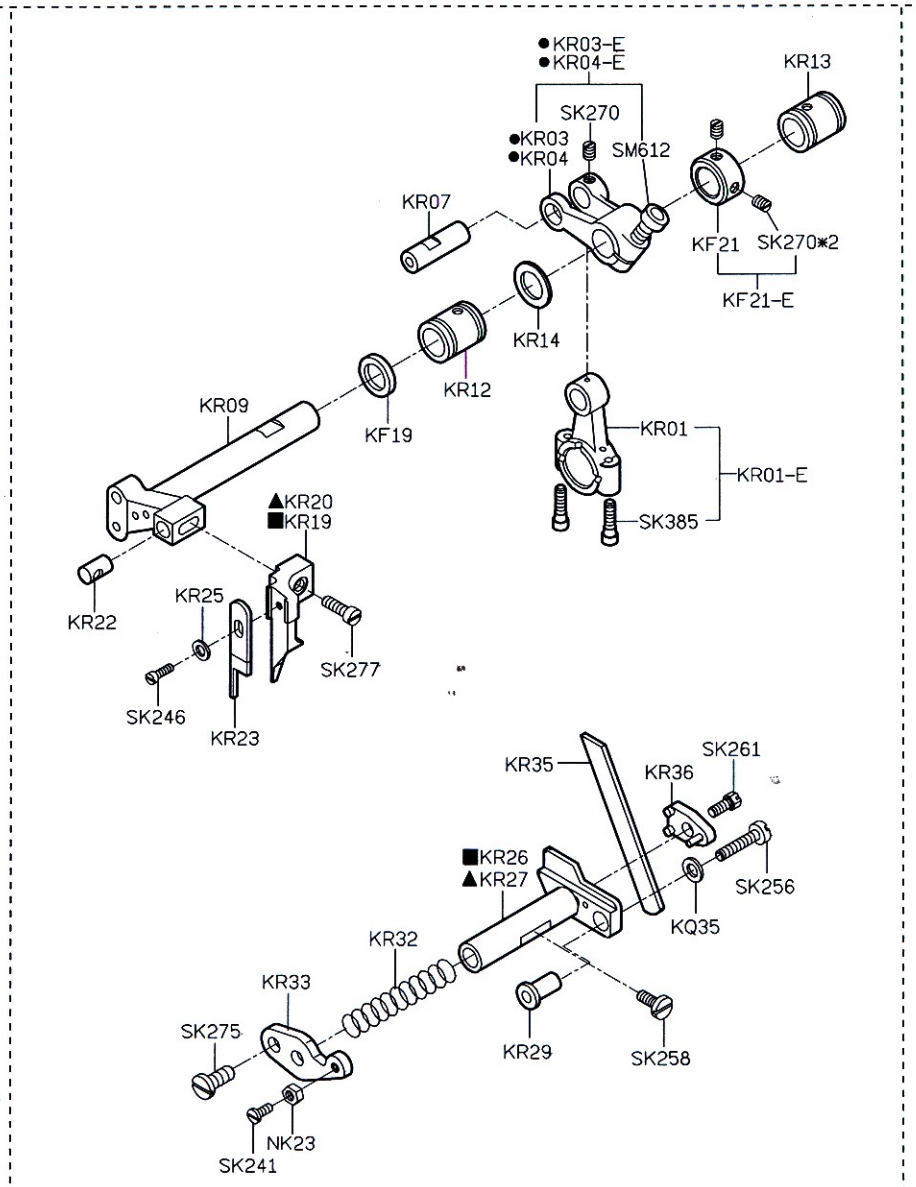

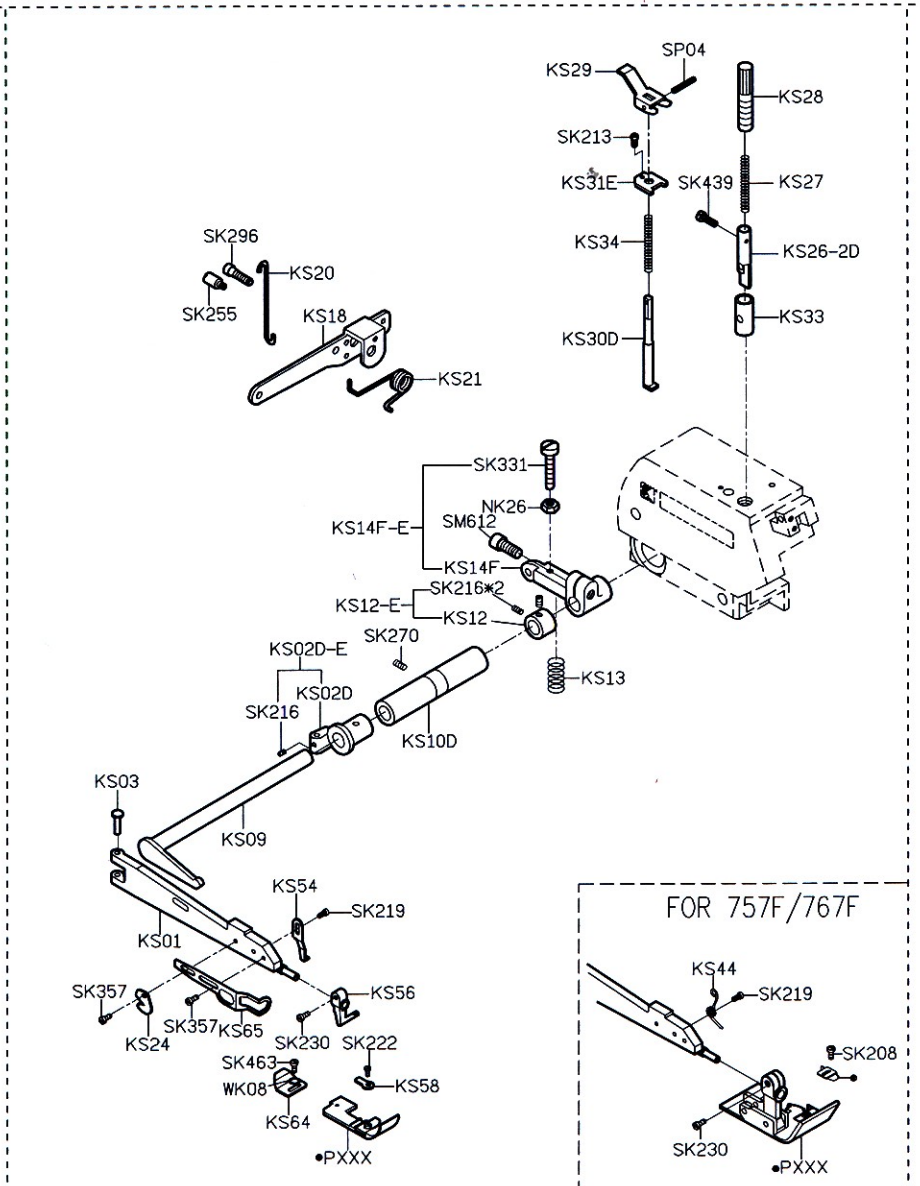

PARTS LIST FOR KR GROUP

PARTS LIST FOR KS GROUP

PARTS LIST FOR KT GROUP

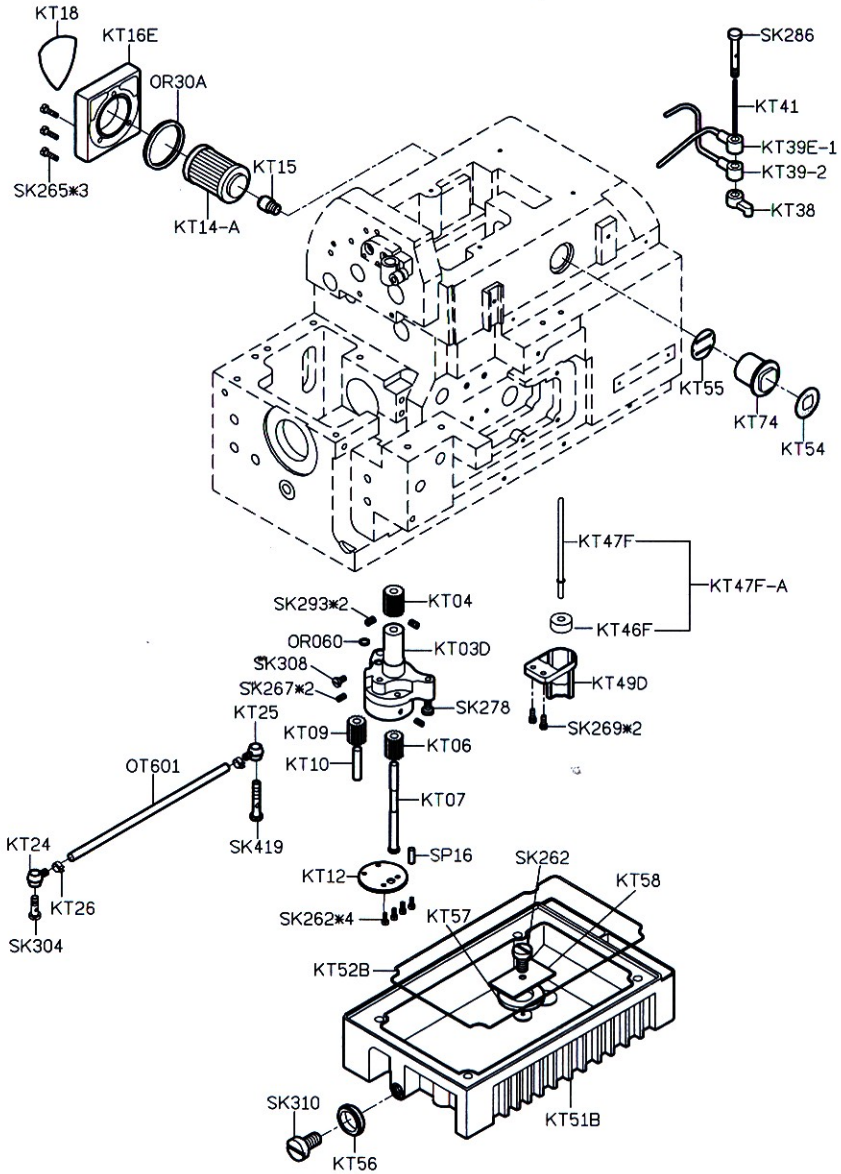

PARTS LIST FOR KU GROUP

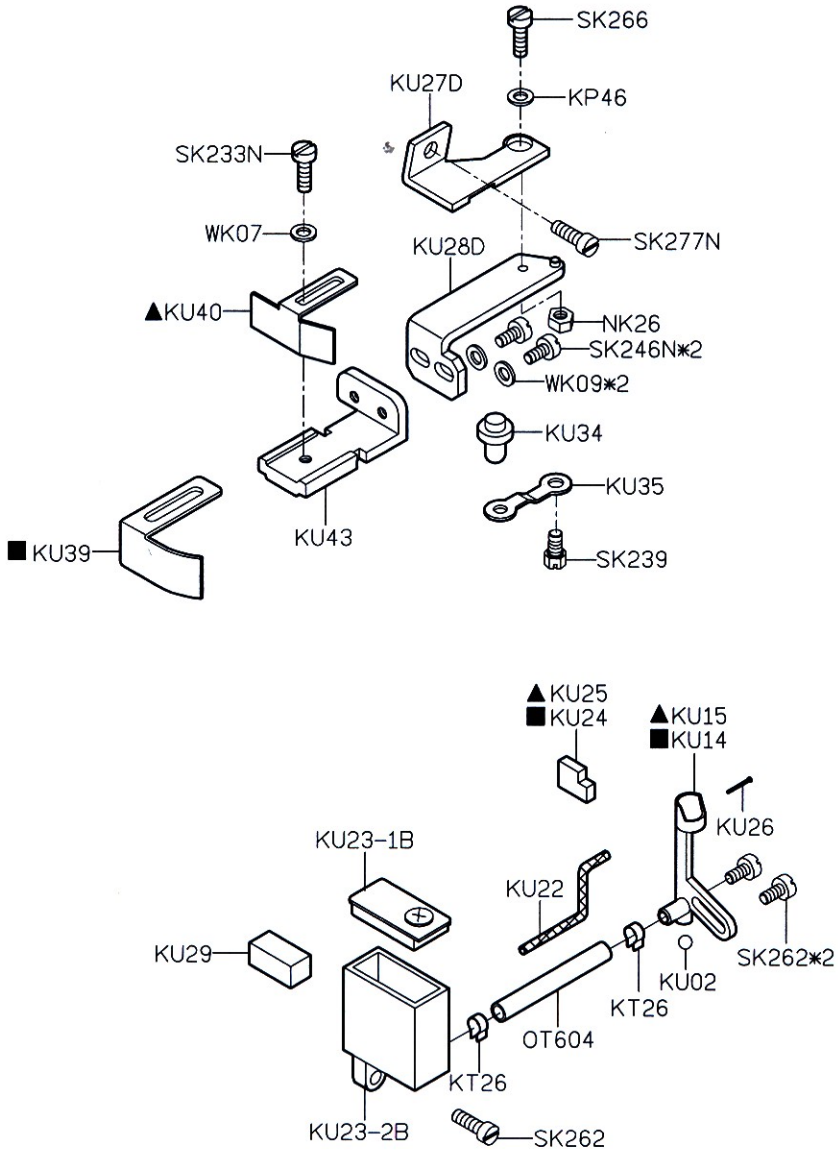

KW40E-3

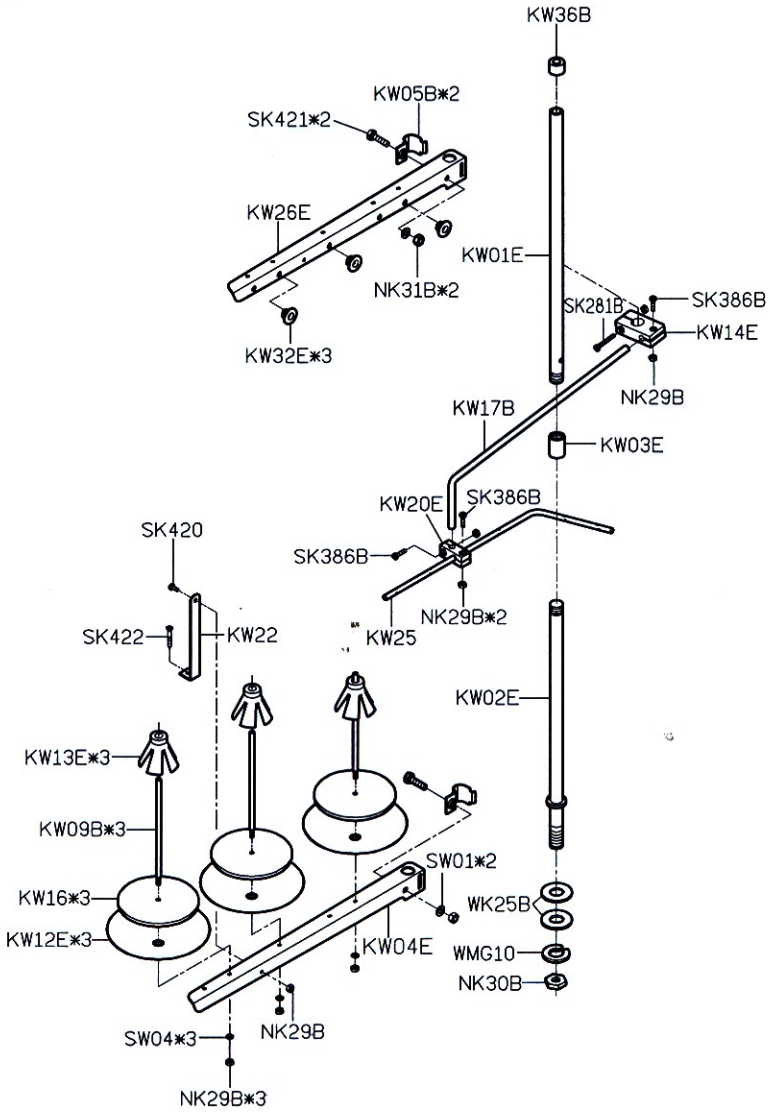

KW40E-4

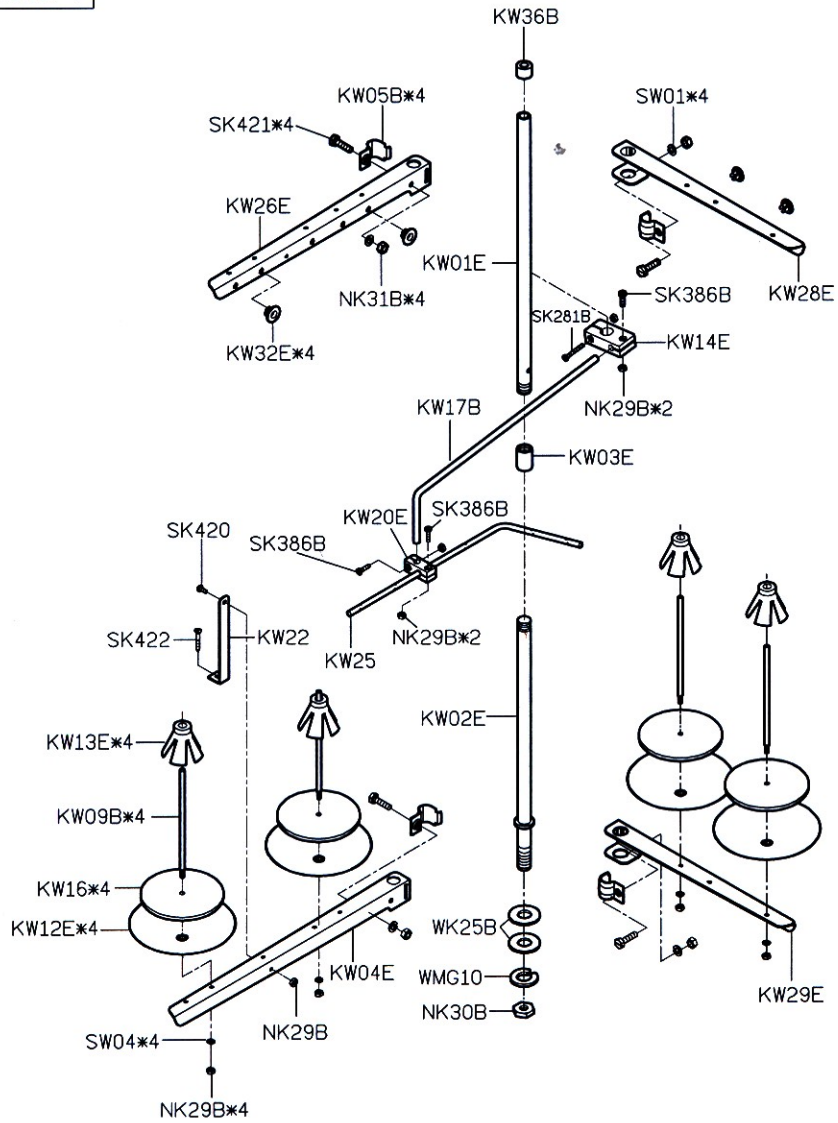

PARTS LIST FOR KW GROUP

KW40E-5

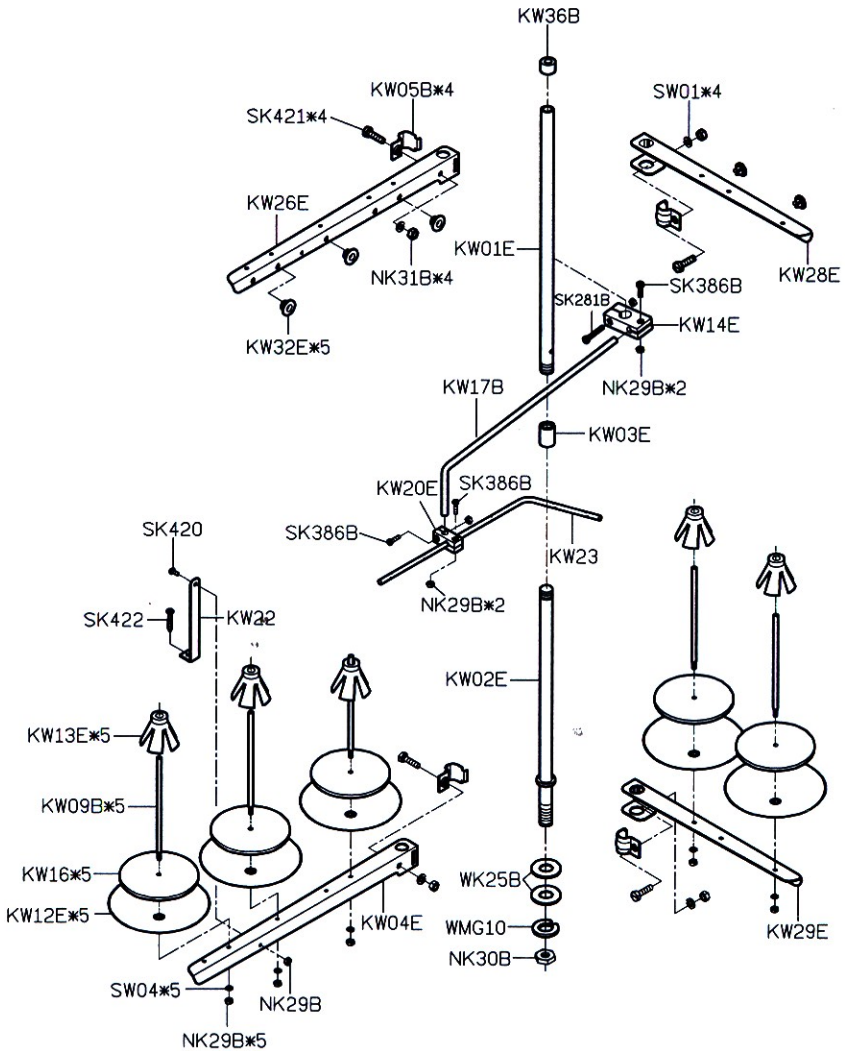

PARTS LIST FOR KW GROUP

KW40E-6

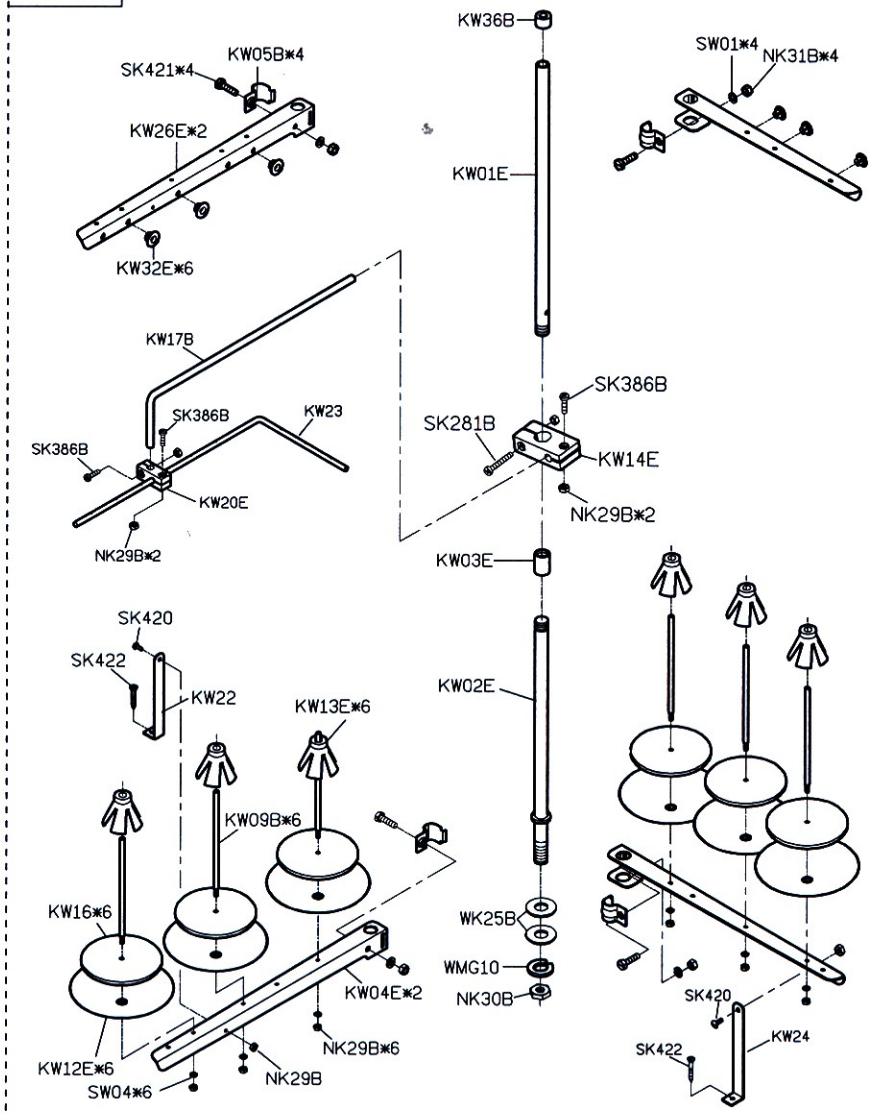

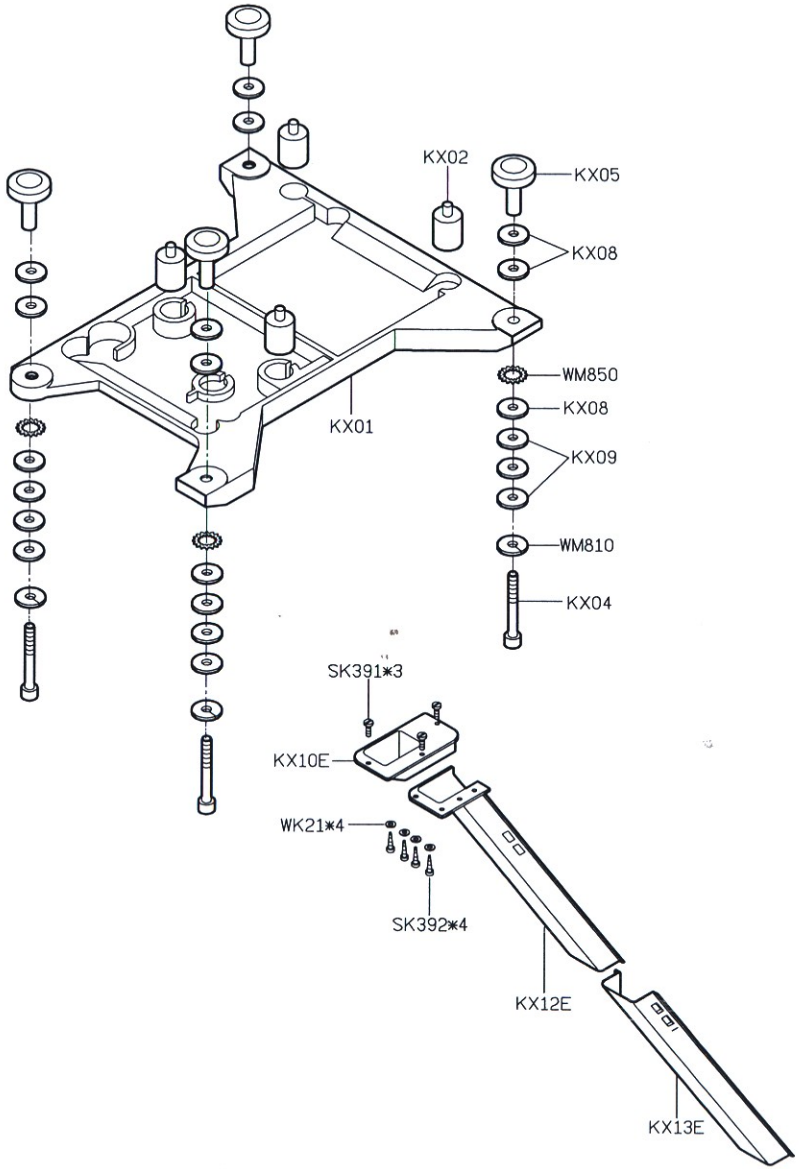

PARTS LIST FOR KX GROUP

PARTS LIST FOR KY GROUP

PARTS LIST FOR KZ GROUP

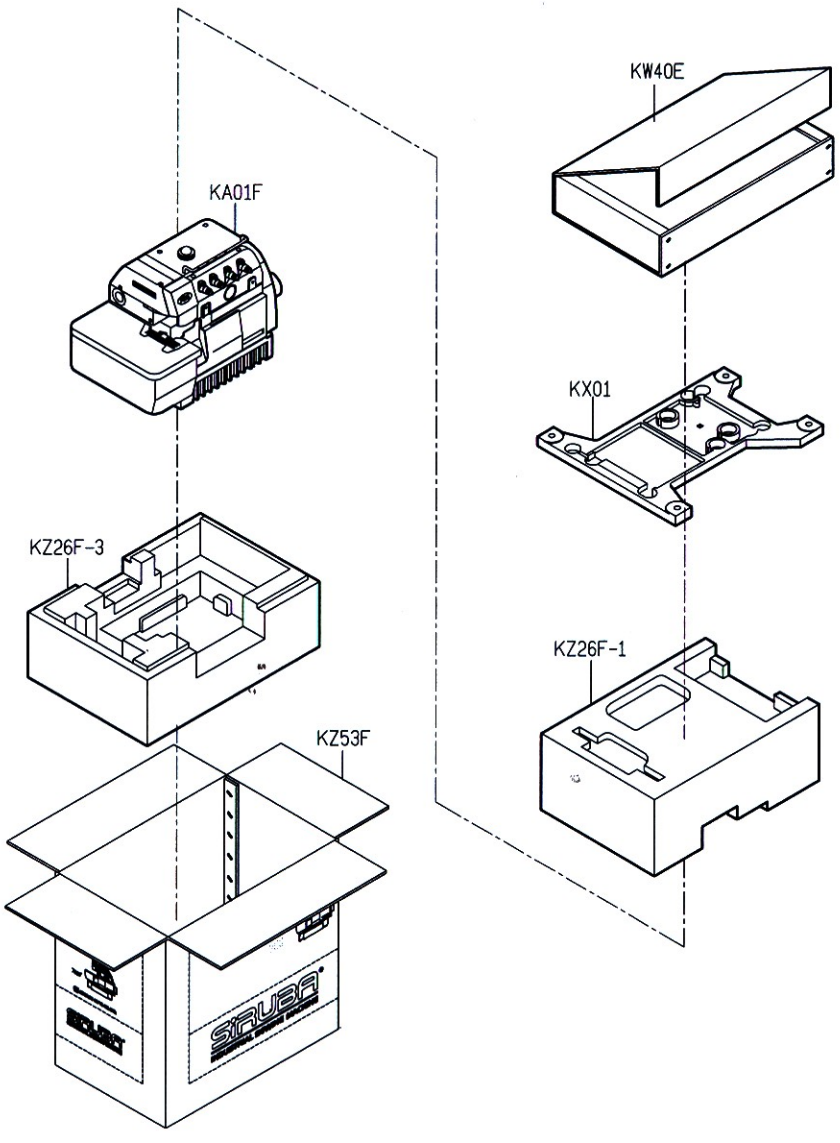

PARTS LIST FOR LD GROUP

700F

高林股份有限公司 KAULIN MFG. CO., LTD.

The specification and/or appearences of the equipment described in this parts list are subiect to change because of modification without previous notice.

KZ08F. DEC. 2005