SiRUBA

零件圖

PARTS LIST

500Qe

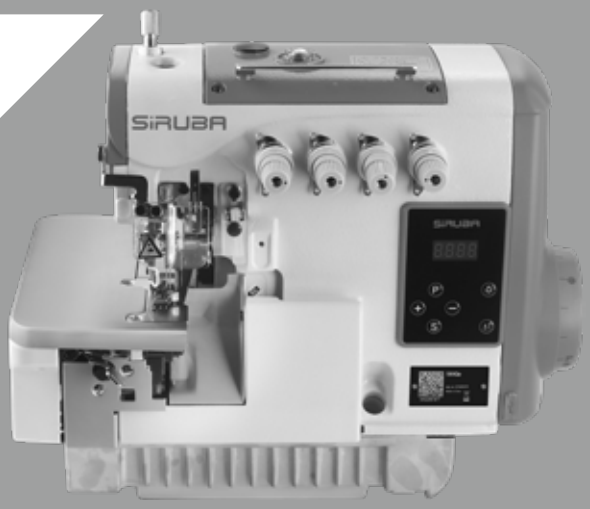

SiRUBA PARTS LIST	Series	Parts Group	Subclass Remark	Page
	500Qe			1 / 1
				Date
				2024/07/30

機型	用　途	針板編號	主送布牙編號		差動牙編號	壓腳	上彎針	針夾	墊圈	針桿曲柄	下彎針擺動曲柄	針號
537Qe-504M-3-04	一般縫紉，薄、中厚物，用於基本縫紉及西褲包邊	213100-400	277008-16	277418-13	277404-16F0	P253E-4	LP26	KG131-E	KJ10F	KF25-A	KJ09B-E	DC27#11
547Qe-514M-3-24	一般縫紉，薄、中厚物，用於針織內衣，婦女、兒童等服裝府縫，腋縫等作業	211313-400	277408-16F0	277418-14	277404-16F0	P253E-4	LP26	KG142-E	KJ13F	KF26-A	KJ11B-E	DC27#11*2
557Qe-516M-3-35	一般縫紉，薄、中厚物，用於褲子、睡衣、襯衫、運動服等直縫作業，縫紉寬度 0.8cm	277517R40	277324-16	277318-13	277330-16	P504-A	LP26	KG153-E	KJ13F	KF26-A	KJ11B-E	DC27#14*2

SiRUBA PARTS LIST	Series	Parts Group	Subclass Remark	Page
	500Qe			1 / 1
				Date
				2024/07/30

MODE	PURPOSE	NO.OF THROAT PLATE	NO.OF FEED DOG		NO.OF DIFERENTIAL RATIO FEED DOG	PRESSER FOOT	UPPER LOOPER	NEEDLE CLAMP	WASHER	NEEDEL BAR SHAFT	LOWER LOOPER SHAFT	NO.OF NEEDLE
537Qe -504M -3-04	General sewing for thin-middle-thick cloth, applicable to trousers piperation	213100 -400	277008 -16	277418 -13	277404 -16F0	P253E-4	LP26	KG131-E	KJ10F	KF25-A	KJ09B-E	DC27#11
547Qe -514M -3-24	General sewing for thin-middle-thick cloth, shoulder and armpit sewing knitting underwear and women and chidren clothes	211313 -400	277408 -16F0	277418 -14	277404 -16F0	P253E-4	LP26	KG142-E	KJ13F	KF26-A	KJ11B-E	DC27#11*2
557Qe -516M -3-35	General sewing for thin-middle-thick cloth,applicable to trousers bed-gown shirt	277517 R40	277324 -16	277318 -13	277330 -16	P504-A	LP26	KG153-E	KJ13F	KF26-A	KJ11B-E	DC27#14*2

SiRUBA PARTS LIST	Series	Parts Group	Subclass Remark	Page
	500Qe	01		1 / 1
				Date
				2024/07/30

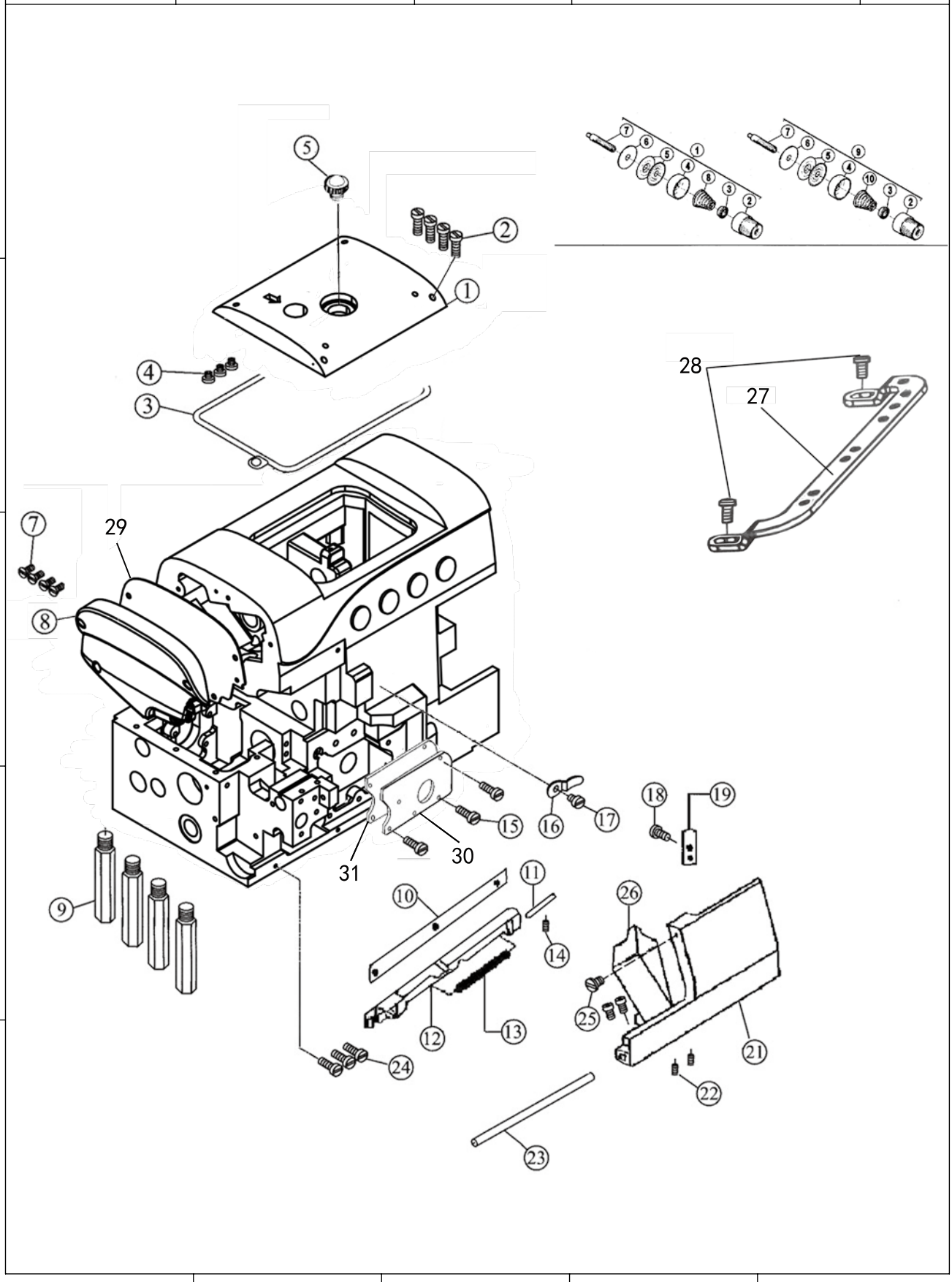

SiRUBA SEQUENCE LIST	Series	Parts Group	Subclass Remark	Page
	500Qe	01		1 / 1
				Date
				2024/07/30

序號 Ref.No	零件編號 Part No.	名稱	Name	數量 Amt. Req. 3	4	5
1	V20-2-7	上蓋	top cover	1	1	1
2	M1-2	螺釘	screw	4	4	4
3	V20-2-9	密封墊	gasket	1	1	1
4	M1-4	減震墊	cushion rubber	3	3	3
5	M1-5	油標蓋	oil idverl gauge washer	1	1	1
7	M1-7	螺釘	screw	4	4	4
8	V20-2-10	左蓋	left cover	1	1	1
9	M1-9	支柱	bed pin	4	4	4
10	M1-10	前罩架墊	front cover hinge washer	1	1	1
11	M1-11	銷	pin	1	1	1
12	M1-12	前罩架	front cover hinge	1	1	1
13	M1-13	鉸鏈銷彈簧	hinge pin spring	1	1	1
14	M1-14	螺釘	screw	1	1	1
15	M1-15	螺釘	screw	3	3	3
16	M1-16	前罩闆卡簧	front cover snaping	1	1	1
17	M1-17	螺釘	screw	1	1	1
18	M1-18	螺釘	screw	1	1	1
19	M1-19	鎖緊板	locking plate	1	1	1
21	M1-21	前單	frong cover	1	1	1
22	M1-22	螺釘	screw	2	2	2
23	M1-23	鉸鏈銷	nlnge pln	1	1	1
24	M1-24	螺釘	screw	3	3	3
25	M1-25	螺釘	screw	3	3	3
26	M1-26	前門擋板	front cover guard	1	1	1
27	V20-5-1	導線架	lead frame	1	1	1
28	7018	螺釘	screw	2	2	2
29	V20-2-11	左蓋墊	left cover washer	1	1	1
30	747-2-12	上彎針密封板	upper looper sealing plate	1	1	1
31	747-2-13	上彎針密封板墊	upper looper sealing plate washer	1	1	1

A B C D E

1 2 3 4 5

SiRUBA PARTS LIST	Series	Parts Group	Subclass Remark	Page
	500Qe	02		1 / 1
				Date
				2024/07/30

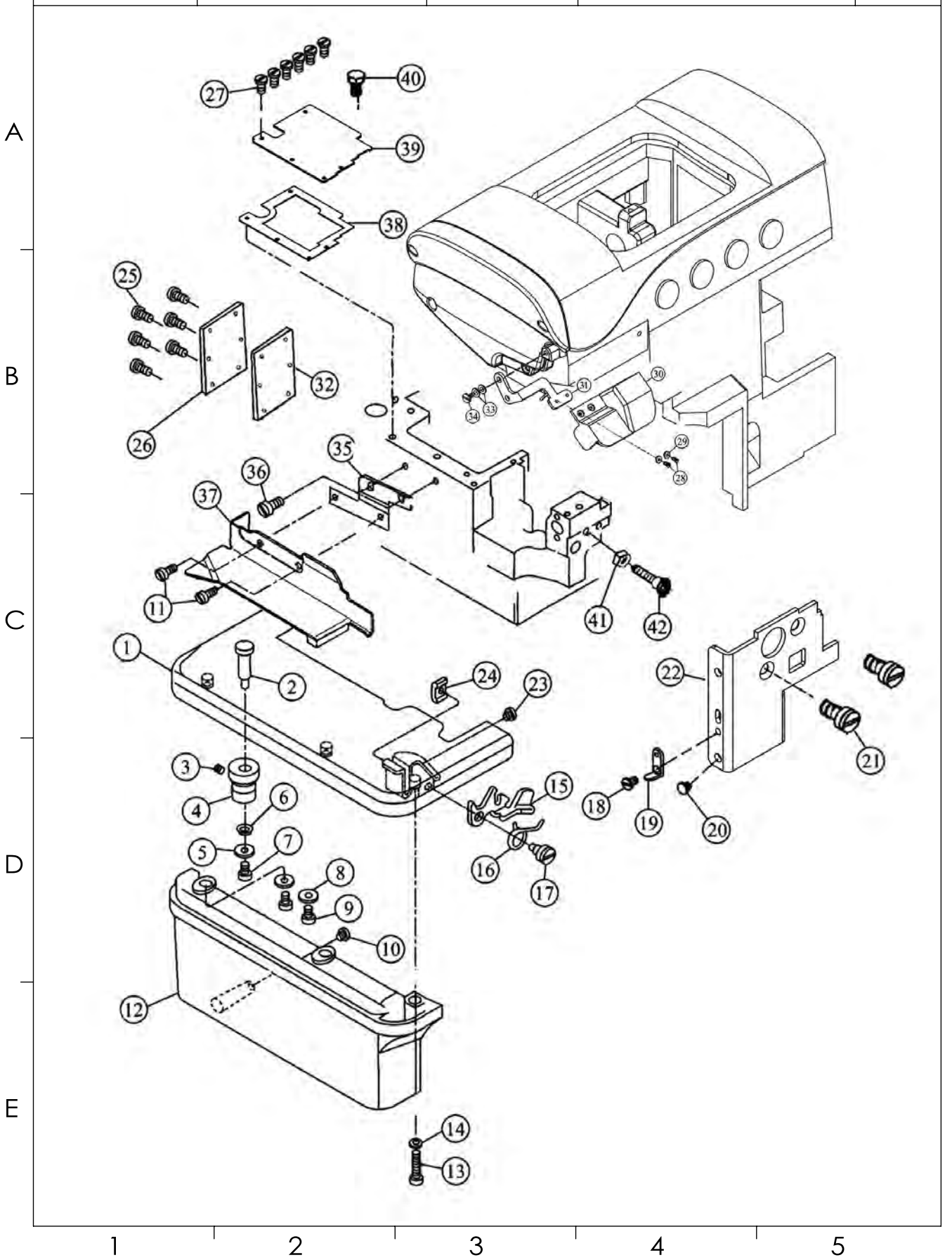

SiRUBA SEQUENCE LIST	Series	Parts Group	Subclass Remark	Page
	500Qe	02		1 / 1
				Date
				2024/07/30

序號 Ref.No	零件編號 Part No.	名稱	Name	數量 Amt. Req. 3	4	5
1	M2-1	縫台	to cloth plate	1	1	0
	5M2-1	縫台	to cloth plate	0	0	1
2	M2-2	軸銷	shaft pin	1	1	1
3	M2-3	螺釘	screw	1	1	1
4	M2-4	銅套	copper sheathing	1	1	1
5	M2-5	墊片	washer	2	2	2
6	M2-6	波形墊片	washer	1	1	1
7	M2-7	螺釘	screw	3	3	3
8	M2-8	墊片	washer	3	3	3
9	M2-9	螺釘	screw	3	3	3
10	M2-10	防震墊	cras pad	1	1	1
11	M2-11	螺釘	screw	2	2	2
12	M2-12	縫台下罩殼	cloth blate lower plate	1	1	0
	5M2-12	縫台下罩殼	cloth blate lower plate	0	0	1
13	M2-13	螺釘	screw	1	1	1
14	M2-14	墊片	washer	1	1	1
15	M2-15	護板	bach plate	1	1	1
16	M2-16	彈簧	spring	1	1	1
17	M2-17	軸位螺釘	shaft screw	1	1	1
18	M2-18	螺釘	screw	1	1	1
19	M2-19	卡簧	snapring	1	1	1
20	M2-20	防震墊	crash pad	1	1	1
21	M2-21	螺釘	screw	2	2	2
22	M2-22	下刀架擋板	lower knife holser bnck plate	1	1	1
23	M2-23	螺釘	screw	1	1	1
24	M2-24	墊片	washer	1	1	1
25	M2-25	螺釘	screw	6	6	6
26	M2-26	後窗板	rear window plate	1	1	1
27	M2-27	螺釘	screw	6	6	6
28	M2-28	螺釘	screw	2	2	2
29	M2-29	墊片	washer	2	2	2
30	M2-30	防護罩	shield	1	1	1
31	M2-31	支架	holder	1	1	1
32	M2-32	後窗板墊	rear window plate washer	1	1	1
33	M2-33	墊片	washer	2	2	2
34	M2-34	螺釘	screw	1	1	1
35	M2-35	支架	holder	1	1	1
36	M2-36	螺釘	screw	2	2	2
37	M2-37	布料擋板	cloth back plate	1	1	1
38	M2-38	紙墊	poper washer	1	1	1
39	M2-39	左上蓋	upper left cover	1	1	1
40	M2-40	螺釘	screw	1	1	1
41	M2-41	螺母	nut	1	1	1
42	M2-42	螺釘	screw	1	1	1

A B C D E

1 2 3 4 5

SiRUBA PARTS LIST	Series	Parts Group	Subclass Remark	Page
	500Qe	03		1 / 1
				Date
				2024/07/30

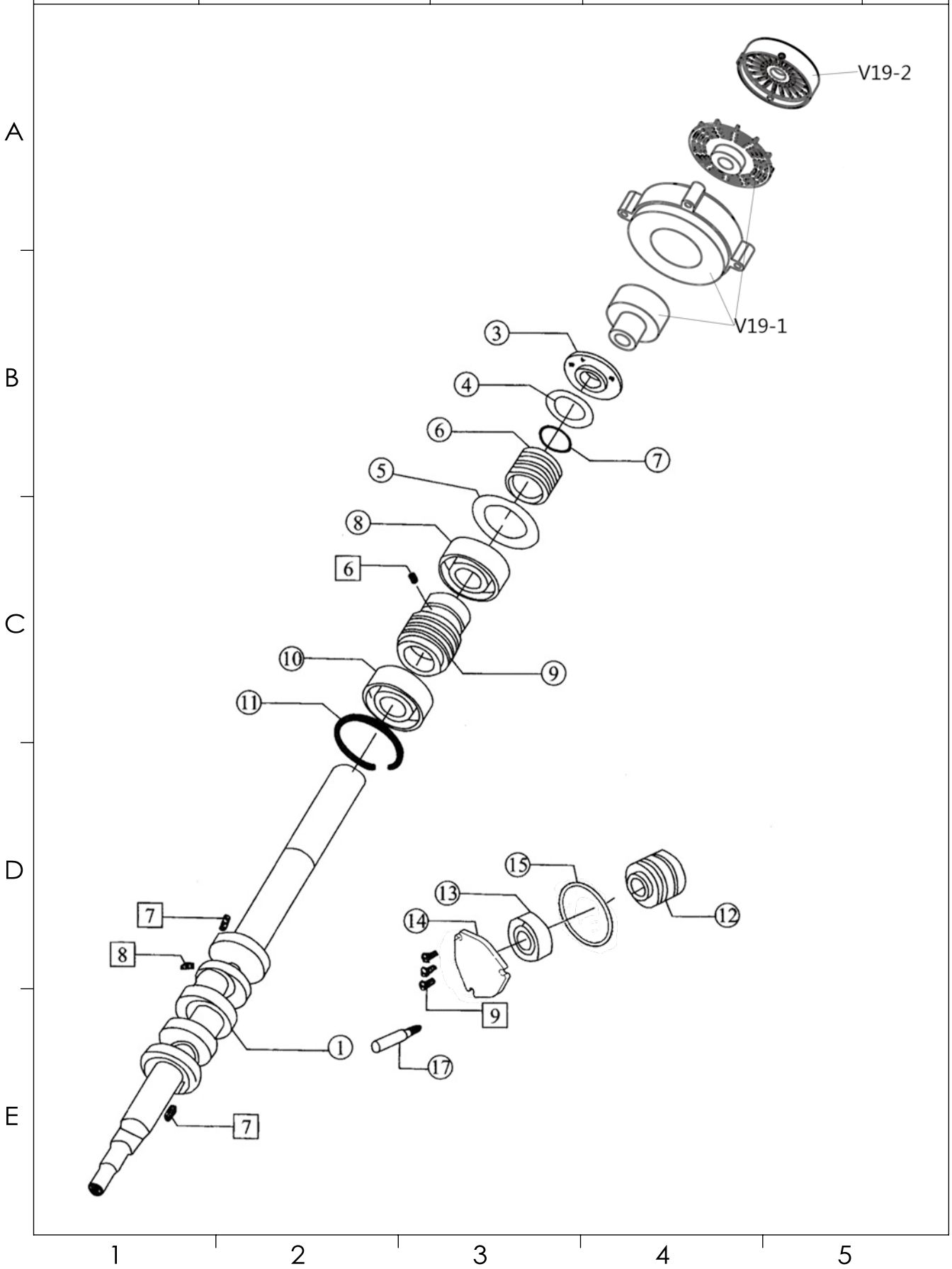

SiRUBA SEQUENCE LIST	Series	Parts Group	Subclass Remark	Page
	500Qe	03		1 / 1
				Date
				2024/07/30

序號 Ref.No	零件編號 Part No.	名稱	Name	數量 Amt. Req. 3	4	5
6	M3-6	主軸中軸套	main shaft bysgubg asm	1	1	1
7	M3-7	主軸[密封圈]	Seal ring	1	1	1
8	M3-8	主軸後軸承	main shaft queen shaft bearing	1	1	1
9	M3-9	油泵螺杆	oil pump worm	1	1	1
10	M3-10	主軸軸承	main shaft bearing	1	1	1
11	M3-11	卡簧	shaft end bushing washer	1	1	1
12	M3-12	主軸左套筒	main shaft light bushing	1	1	1
13	M3-13	軸承80200	bearing 80200	1	1	1
14	M3-14	軸承蓋	bearing cover	1	1	0
	5M3-14	軸承蓋	bearing cover	0	0	1
15	M3-15	軸承蓋墊圈	bearing cover washer	1	1	1
17	5M3-17	凸輪軸	bulgy pulley bearing	0	0	1
1	S073	皮帶輪螺釘	pulley screw	1	1	1
2	W03	皮帶輪螺釘墊圈	pulley screw washer	1	1	1
3	S070	皮帶輪頂絲	pulley set screw	1	1	1
4	S085	皮帶輪定位螺釘	pulley set screw	1	1	1
5	S032	滾針軸承止動蓋螺釘	rear shafting bearint cover srew	3	3	3
6	S043	油泵蝸杆螺釘	oil pump worm screw	1	1	1
7	S078	油瓦螺釘	screw	2	2	2
8	S019	油孔螺釘	screw	1	1	1
9	S022	軸承蓋螺釘	bearing cover screw	3	3	3
10	V19-1	電機組件	Electrical components	1	1	1
11	V19-2	手輪	Handwheel	1	1	1

A B C D E

1 2 3 4 5

SiRUBA PARTS LIST	Series	Parts Group	Subclass Remark	Page
	500Qe	04		1 / 1
				Date
				2024/07/30

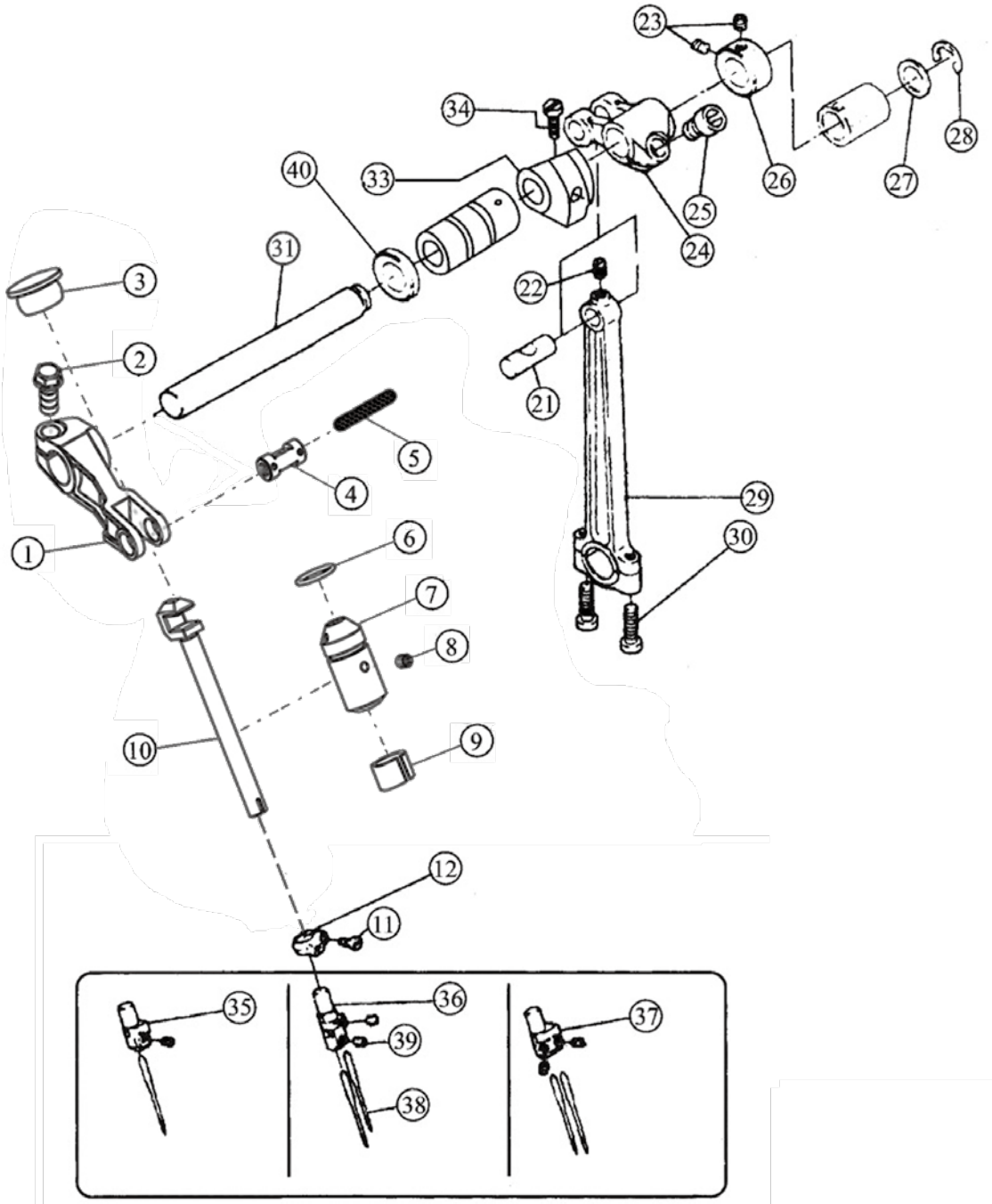

SiRUBA SEQUENCE LIST	Series	Parts Group	Subclass Remark	Page
	500Qe	04		1 / 1
				Date
				2024/07/30

序號 Ref.No	零件編號 Part No.	名稱	Name	數量 Amt. Req. 3	4	5
1	M4-1	曲柄	crank	1	1	1
2	M4-2	螺釘	screw	1	1	1
3	M4-3	橡膠塞	rubber plug	1	1	1
4	M4-4	肖子	pin	1	1	1
5	M4-5	油線	oil wick	1	1	1
6	M4-6	O型圈	O ring	1	1	1
7	M4-7	針桿套	needle bar bush	1	1	1
8	M4-8	螺釘	screw	1	1	1
9	M4-9	針桿套毛氈	felt for needle bush	1	1	1
10	M4-10	針杆	needle bar	1	1	1
11	M4-11	螺釘	screw	1	1	1
12	M4-12	針桿圈	needle bar ring	1	1	1
13						
14						
15						
16						
17						
18						
19						
20				1	1	1
21	M4-21	肖子	pin	1	1	1
22	M4-22	螺釘	screw	1	1	1
23	M4-23	螺釘	screw	1	1	1
24	M4-24	曲柄	crank	1	1	1
25	M4-25	螺釘	screw	1	1	1
26	M4-26	擋圈	snap ring	1	1	1
27	M4-27	墊片	washer	1	1	1
28	M4-28	卡簧	snap ring	1	1	1
29	M4-29	長連桿	long connecting rod	1	1	1
30	M4-30	螺釘	screw	2	2	2
31	M4-31	上軸	upper shaft	1	1	1
32						
33	M4-33	針桿擺軸平衡塊	balance block	1	1	1
34	M4-34	螺釘	screw	1	1	1
35	M4-35	針古	needle clamp	1	0	0
36	M4-36	針古	needle clamp	0	1	0
37	M4-37	針古	needle clamp	0	0	1
38	M4-38	機針	needle	1	2	2
39	M4-39	螺釘	screw	1	2	2
40	M4-40	油封	oil seal	1	1	1

SiRUBA PARTS LIST	Series	Parts Group	Subclass Remark	Page
	500Qe	05		1 / 1
				Date
				2024/07/30

序號 Ref.No	零件編號 Part No.	名稱	Name	數量 Amt. Req. 3	4	5
44	V20-19-36	螺母	nut	1	1	1
45	V20-19-53	O型圈	type "O" washer	1	1	1
46	V20-19-54	O型圈	type "O" washer	2	2	2
47	V20-19-55	壓桿套	compression rod	1	1	1

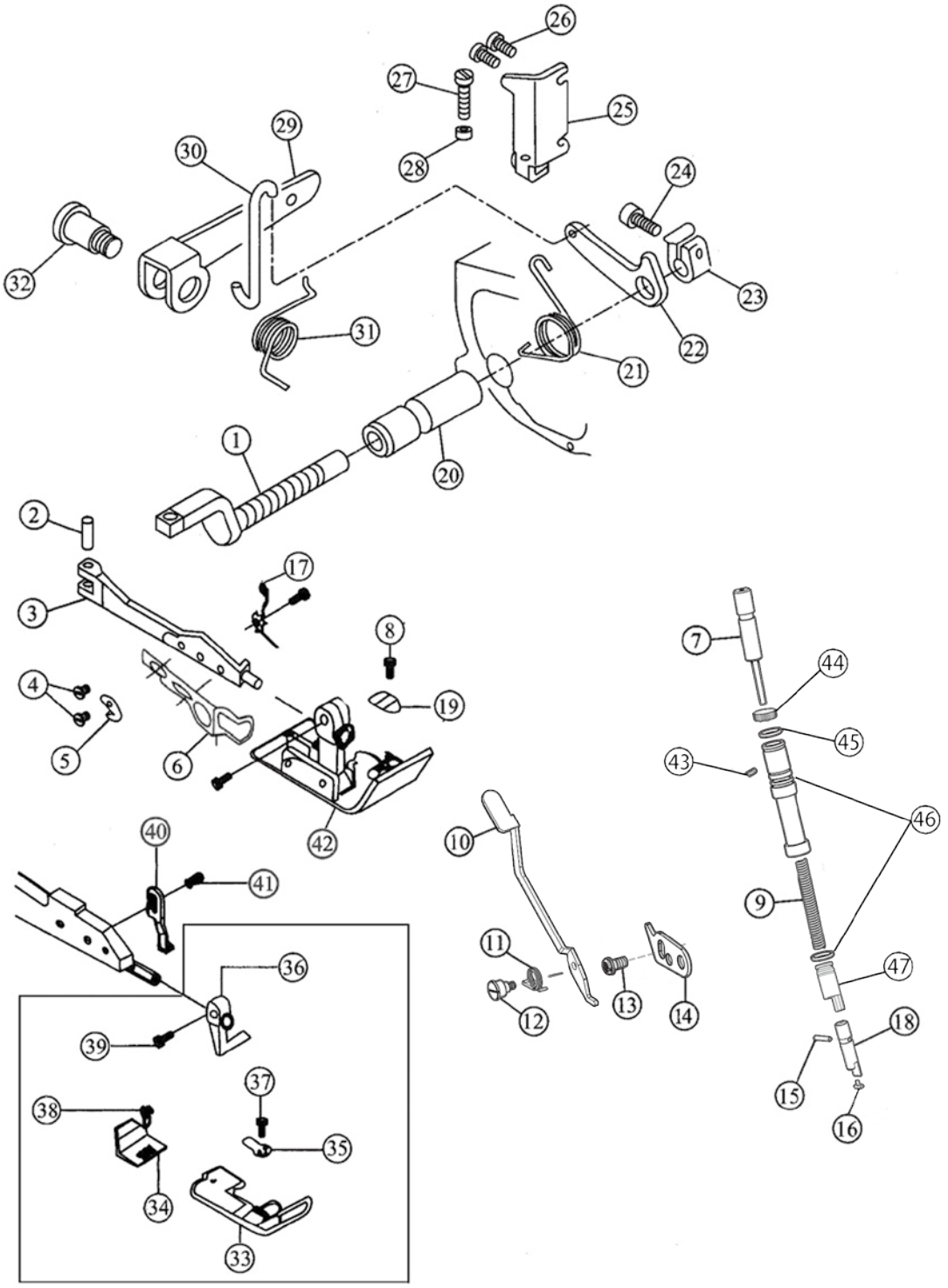

SiRUBA SEQUENCE LIST	Series	Parts Group	Subclass Remark	Page
	500Qe	05		1 / 1
				Date
				2024/07/30

序號 Ref.No	零件編號 Part No.	名稱	Name	數量 Amt. Req.		
				3	4	5
1	M5-1	壓腳軸	pressor foot shaft	1	1	1
2	M5-2	肖子	pin	1	1	1
3	M5-3	壓腳臂	pressor foot	1	1	1
4	M5-4	螺釘	screw	3	3	3
5	M5-5	割線刀	thread cutting knife	1	1	1
6	M5-6	護指器	finger protector	1	1	1
7	M5-7	調節螺絲	screw	1	1	1
8	M5-8	螺釘	screw	1	1	1
9	M5-9	彈簧	spring	1	1	1
10	M5-10	扳手	lifting handle	1	1	1
11	M5-11	彈簧	spring	1	1	1
12	M5-12	螺釘	screw	1	1	1
13	M5-13	螺釘	screw	1	1	1
14	M5-14	調節板	stopper	1	1	1
15	M5-15	肖	pin	1	1	1
16	M5-16	橡膠墊	washer	1	1	1
17	5M5-17	壓腳彈簧	presser foot	0	0	1
18	M5-18	壓桿組件	presser bar form	1	1	1
19	M5-19	小壓腳	lifter presser foot	0	1	0
20	M5-20	壓腳軸套	presser foot shaft bushing	1	1	1
21	M5-21	彈簧	spring	1	1	1
22	M5-22	抬壓腳曲柄	presser foot cranh	1	1	1
23	M5-23	抬壓腳曲柄	presser foot cranh	1	1	1
24	M5-24	螺釘	screw	1	1	1
25	M5-25	角板	stopper	1	1	1
26	M5-26	螺釘	screw	2	2	2
27	M5-27	螺釘	screw	1	1	1
28	M5-28	螺母	nut	1	1	1
29	M5-29	抬壓腳槓桿	presser foot lever	1	1	1
30	M5-30	彎鈎	hggk	1	1	1
31	M5-31	彈簧	spring	1	1	1
32	M5-32	抬壓腳螺釘	presser foot screw	1	1	1
33	M5-33	壓腳底板	presser foot base	0	1	0
34	M5-34	壓腳底板簧片	presser foot	1	1	1
35	M5-35	壓腳小舌頭簧片	presser foot base	1	1	1
36	M5-36	厭腳接柄	presser foot holder	1	1	1
37	M5-37	螺釘	screw	1	1	1
38	M5-38	螺釘	screw	1	1	1
39	M5-39	螺釘	screw	1	1	1
40	M5-40	壓腳架連接板	presser foot holder conneting plate	1	1	1
41	M5-41	螺釘	screw	1	1	1
42	3M5-42	壓腳組件	presser form	1	0	0
	4M5-42	壓腳組件	presser form	0	1	0
	5M5-42	壓腳組件	presser form	0	0	1

A B C D E

1 2 3 4 5

SiRUBA PARTS LIST	Series	Parts Group	Subclass Remark	Page
	500Qe	06		1 / 1
				Date
				2024/07/30

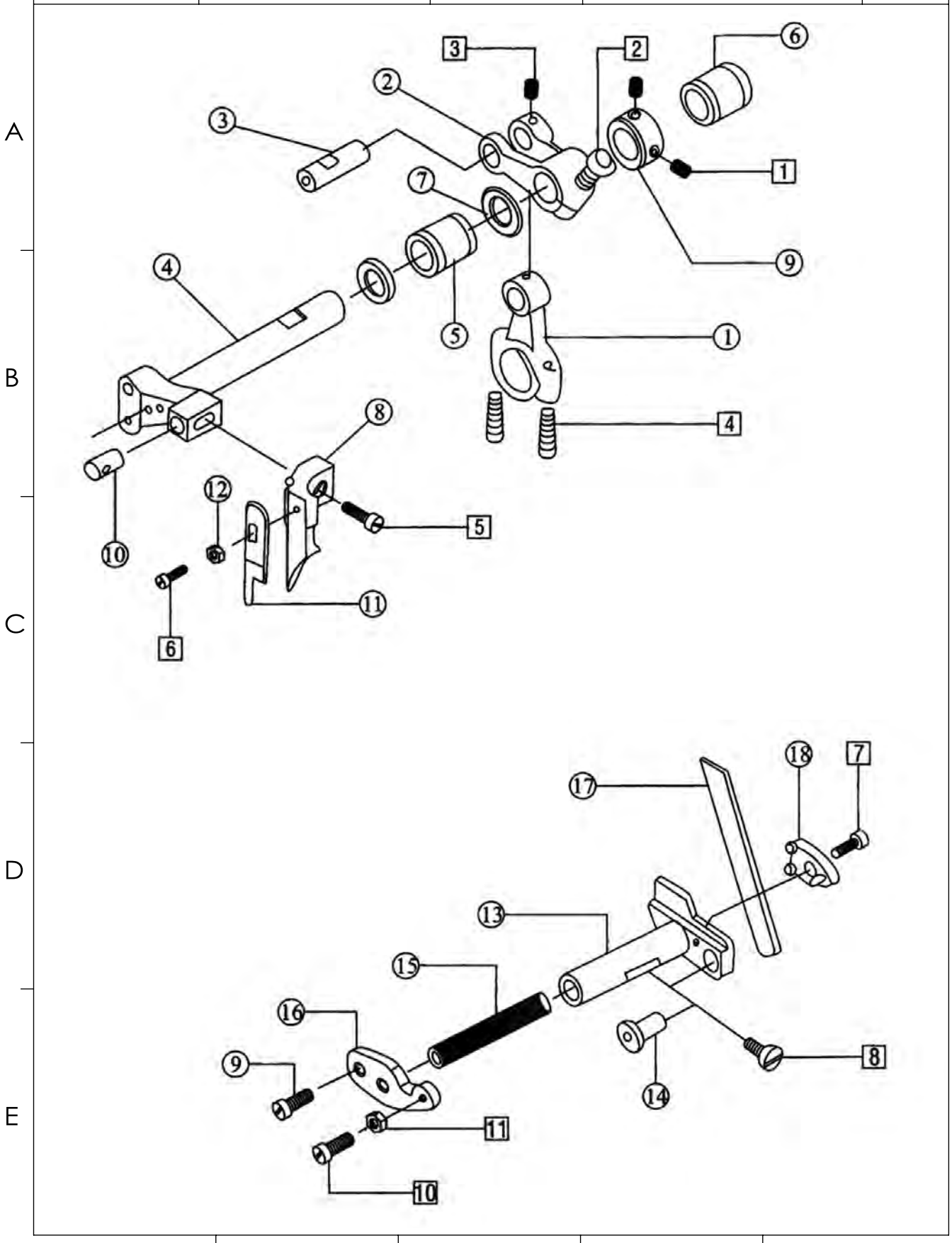

SiRUBA SEQUENCE LIST	Series	Parts Group	Subclass Remark	Page
	500Qe	06		1 / 1
				Date
				2024/07/30

序號 Ref.No	零件編號 Part No.	名稱	Name	數量 Amt. Req. 3	4	5
1	M6-1	上刀連桿	upper knife driving connecting link	1	1	1
2	M6-2	上刀曲柄	upper knife crank	1	1	0
	5M6-2	上刀曲柄	upper knife crank	0	0	1
3	M6-3	曲柄銷	crank pin	1	1	1
4	M6-4	上刀架軸	upper dnife frame rock shaft	1	1	1
5	M6-5	上刀軸左套筒	upper knife frame rock shaft brshing life	1	1	1
6	M6-6	上刀軸右套筒	upper knife frame rock shaft bushing right	1	1	1
7	M6-7	墊圈	washer	1	1	1
8	M6-8	上刀座	upper knife holder	1	1	0
	5M6-8	上刀座	upper knife holder	0	0	1
9	M6-9	擋圈	snap ring	1	1	1
10	M6-10	上刀架軸圈	upper knife holder pin	1	1	1
11	M6-11	上刀	upper knife	1	1	1
12	M6-12	墊圈	washer	1	1	1
13	M6-13	下刀架	lower knife holder	1	1	0
	5M6-13	下刀架	lower knife holder	0	0	1
14	M6-14	下刀架套筒	lower knife holder bushing	1	1	1
15	M6-15	下刀架彈簧	lower knife holder spring	1	1	1
16	M6-16	下刀架擋板	lower knife holder	1	1	1
17	M6-17	下刀	lower knife	1	1	1
18	M6-18	下刀壓板	lower knife holder looking plate	1	1	1
1	S057	擋圈螺釘	snapring screw	2	2	2
2	S010	上刀曲柄緊固螺釘	upper knife cramk set screw	1	1	1
3	S043	上刀曲柄銷螺釘	upper knife cramk pin screw	1	1	1
4	S074	上刀連桿螺釘	upper knife conneting link screw	2	2	2
5	S046	上刀座螺釘	upper knife holder screw	1	1	1
6	S025	上刀螺釘	upper knife screw	1	1	1
7	S036	下刀壓板螺釘	lower knife holder locking plate screw	1	1	1
8	S033	下刀架螺釘	lower knife holder locking plate screw	1	1	1
9	S045	下刀擋板螺釘	lower knife snap plate screw	1	1	1
10	S022	下刀擋板螺釘	lower knife snap plate screw	1	1	1
11	N01	下刀擋板螺母	lower knife snap plate screw	1	1	1

A B C D E

1 2 3 4 5

SiRUBA PARTS LIST	Series	Parts Group	Subclass Remark	Page
	500Qe	07		1 / 1
				Date
				2024/07/30

序號 Ref.No	零件編號 Part No.	名稱	Name	數量 Amt. Req. 3	4	5
5	S015	過線架螺釘	thread guide holder screw	2	2	2
6		螺釘	screw	1	1	1
7	4543	固定螺釘	set screw	1	1	1
8	S005	後護針擋螺釘	rear needle guard screw	2	2	2
9	S023	護針擋螺釘	needle guard screw	1	1	1
10	W07	護針擋墊圈	needle tuard washer	1	1	1
11	S017	挑線螺釘	thread take up screw	2	2	2
12	S103	擋板螺釘I	snap plate screw I	2	2	2
13	S019	擋板螺釘II	snap plate screw II	1	1	1
14	S104	擋板定位螺釘	snap plate set screw	1	1	1
15	V20-11-6	前針板座	front needle plate seat	1	1	1
16	V20-11-7	螺釘	screw	2	2	2
17	V20-11-5	防震墊	cushion rubber	2	2	2

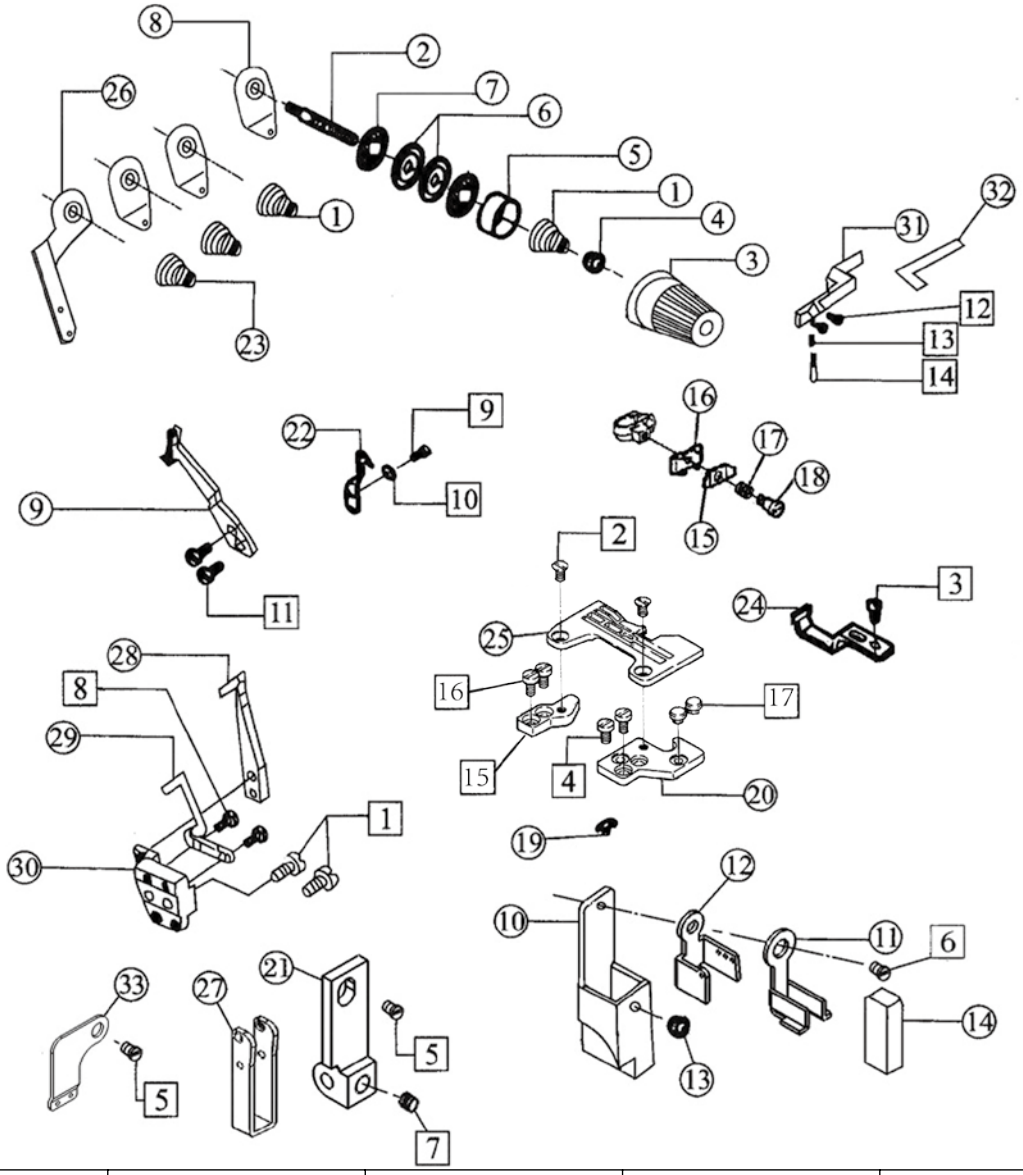

SiRUBA SEQUENCE LIST	Series	Parts Group	Subclass Remark	Page
	500Qe	07		1 / 1
				Date
				2024/07/30

序號 Ref.No	零件編號 Part No.	名稱	Name	數量 Amt. Req. 3	4	5
1	M7-1	彎針調壓簧	thread tension spring	2	2	2
2	M7-2	夾線螺釘	thread tension screw	3	4	4
3	M7-3A	調壓螺母	thread tension nut	3	4	4
4	M7-4	調壓止動套	thread tension spring	3	4	4
5	M7-5A	調壓止動蓋	thread tension spring retainer house	3	4	4
6	M7-6	線片	thread tension disc	6	8	8
7	M7-7	火線片墊	thread tension disc washer	6	8	8
8	M7-8A	過線板	thread guide	2	3	3
9	M7-9	挑線板	upper thread take-up	1	1	0
	5M7-9	挑線板	upper thread take-up	0	0	1
10	M7-10	矽油盒	oil box	1	1	1
11	M7-11	油氈墊架	oil felt	1	1	1
12	M7-12	過線架	thread guide	1	1	1
13	M7-13	矽油盒膠墊	oil box washer	1	1	1
14	M7-14	油氈墊	oil felt	1	1	1
15	M7-15	攔線板	tension spring	1	1	1
16	M7-16	攔線板架	thread controler disc holder	1	1	1
17	M7-17	彈簧	spring	1	1	1
18	M7-18	螺釘	screw	1	1	1
19	M7-19	針板座鍵	throat plate positionign rod	2	2	2
20	M7-20	針板座	throat plate barcket	1	1	1
21	M7-21	過線架	thread mark guide	1	1	1
22	M7-22	護針擋	teat needle guard	1	1	1
23	M7-23	調壓簧	thread tension spring	1	2	2
24	4M7-24	前護針擋	front needle guard	0	1	0
	3M7-24	前護針擋	front needle guard	1	0	0
	5M7-24	前護針擋	front needle guard	0	0	1
25	4M7-25	針板	throat plate	0	1	0
	3M7-25	針板	throat plate	1	0	0
	5M7-25	針板	throat plate	0	0	1
26	M7-26A	過線板	thread guide	0	1	1
27	5M7-27	過線	thread guide	1	1	1
28	5M7-28	護針I	needle guard I	0	0	1
29	5M7-29	護針擋II	needle guide II	0	0	1
30	M7-30	護針擋座	needle guard barcket	1	1	0
	5M7-30	護針擋座	needle guard barcket	0	0	1
31	M7-31	擋板	snap plate	1	1	1
32	M7-32	擋板墊	snap plate washer	1	1	1
33	M7-33	過線板	thread guide	1	1	1
1	S045	螺釘	screw	2	2	2
2	S035	針板螺釘	throat plate screw	2	2	2
3	S016	前護針板螺釘	fornt needle snap screw	1	1	1
4	S061	針板座螺	throat plat barcket screw	2	2	2

SiRUBA PARTS LIST	Series	Parts Group	Subclass Remark	Page
	500Qe	08		1 / 1
				Date
				2024/07/30

序號 Ref.No	零件編號 Part No.	名稱	Name	數量 Amt. Req. 3	4	5
10	S027	調線刻度板螺釘	thread amount regulating plate	2	2	2
11	S037	調線刻度板螺釘	screw	1	1	1
12	S014	彎釘過線螺釘	looper shaft thread guide screw	2	2	2
13	W08	彎針過線墊圈	looper shaft thread guide washer	2	2	2
14	S097	上彎針軸導板螺釘	upper looper shaft thread plate screw	1	1	1
15	S062	上彎針軸導板螺釘	upper looper shaft thread plate screw	1	1	1
16	S012	導架座擋板螺釘	thread holder snap plate screw	1	1	1
17	S095	導線座擋板螺釘	thread holder snap plate screw	1	1	1
18	S015	上彎針緊固螺釘	upper looper set screw	1	1	1

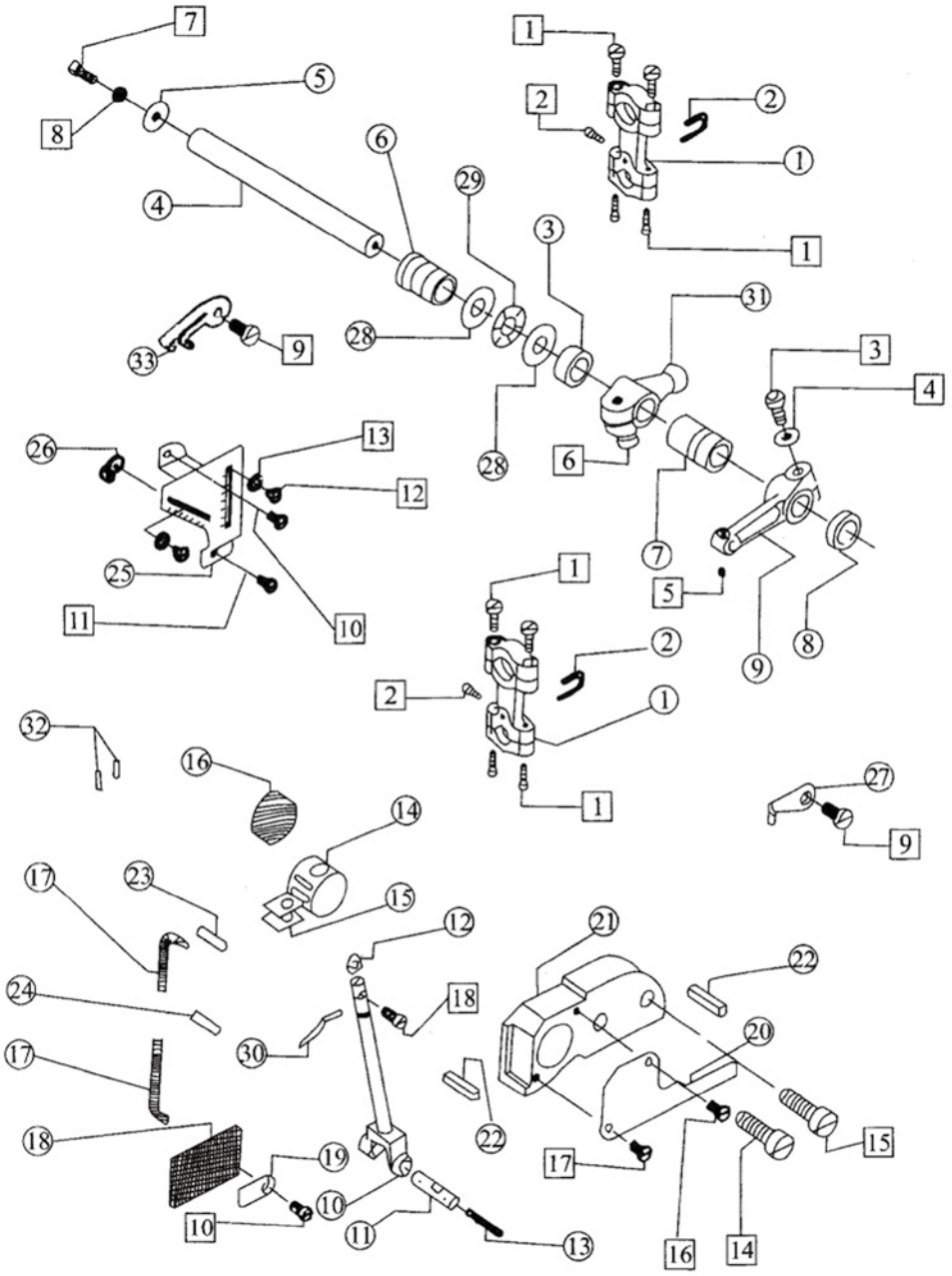

SiRUBA SEQUENCE LIST	Series	Parts Group	Subclass Remark	Page
	500Qe	08		1 / 1
				Date
				2024/07/30

序號 Ref.No	零件編號 Part No.	名稱	Name	數量 Amt. Req. 3	4	5
1	M8-1	彎針連桿	looper link	2	2	2
2	M8-2	彎針連桿擺架	looper link holder	2	2	2
3	M8-3	厚墊圈	thickness washer	0	1	0
	5M8-3	厚墊圈	thickness washer	1	0	1
4	M8-4	上彎針軸	upper looper shaft	1	1	1
5	M8-5	大墊圈	big washer	1	1	1
6	M8-6	上彎針軸後套筒	upper looper shaft rear bashing	1	1	1
7	M8-7	上彎針軸前套筒	upper looper shaft foot bushing	1	1	1
8	M8-8	上彎針軸油封	upper looper shaft oil seal	1	1	1
9	M8-9	上彎針軸曲柄	upper looper shaft crant	1	1	1
10	M8-10	上彎針搖桿	upper looper shaft bar	1	1	1
11	M8-11	搖桿銷	connecting rod shaft pin	1	1	1
12	M8-12	搖桿卡片	washer	1	1	1
13	M8-13	油線	oil wick	1	1	1
14	M8-14	上彎針軸導塊	upper looper slide bar slidel block	1	1	1
15	M8-15	油氈	oil felt	2	2	2
16	M8-16	油氈	oil felt	1	1	1
17	M8-17	油線	oil wick	2	2	2
18	M8-18	濾油板	acreen oil plate	1	1	1
19	M8-19	壓板	felt plate	1	1	1
20	M8-20	導架座擋板	thread hlder snap plate	1	1	1
21	M8-21	上彎針軸導架座	upper looper shaft slide bar bracket	1	1	1
22	M8-22	油封	oil seal	2	2	2
23	M8-23	油管	oil tube	1	1	1
24	M8-24	油管	oil tube	1	1	1
25	M8-25	調線刻度板	thread amount regulating plate	1	1	1
26	M8-26	上彎針過線	upper looper thread guide	1	1	1
27	M8-27	上彎針軸過線板	upper looper shaft thread plate	1	1	1
28	M8-28	軸承擋板	shaft bearing guaid	2	2	2
29	M8-29	滾針端面軸承	lower looper holder copper	1	1	1
30	M8-30	彎針	looper	1	1	1
31	M8-31	上彎針擺動曲柄	upper looper crank bearing	0	1	0
	5M8-31	上彎針擺動曲柄	upper looper crank bearing	1	0	1
32	M8-32	穿線管	threading rube	2	2	2
33	M8-33	兩孔過線板	two for thread guide	1	1	1
1	S074	連桿螺釘	shaft screw	8	8	8
2	S0384	彎針連桿止動螺釘	scre	2	2	2
3	S058	上彎針軸曲柄螺釘	upper looper shaft crank screw	1	1	1
4	W12	上彎針軸曲柄墊圈	upper looper shaft washer	1	1	1
5	S009	上彎針軸曲柄絲	link pin set screw	1	1	1
6	S101	擺動曲柄螺釘	nexagon socket screw	1	1	1
7	S036	上彎針軸螺釘	upper looper shaft screw	1	1	1
8	W04	彈簧墊圈	wather	1	1	1
9	S032	上彎針軸過線架螺釘	upper looper shaft thread guide screw	2	2	2

SiRUBA PARTS LIST	Series	Parts Group	Subclass Remark	Page
	500Qe	09		1 / 1
				Date
				2024/07/30

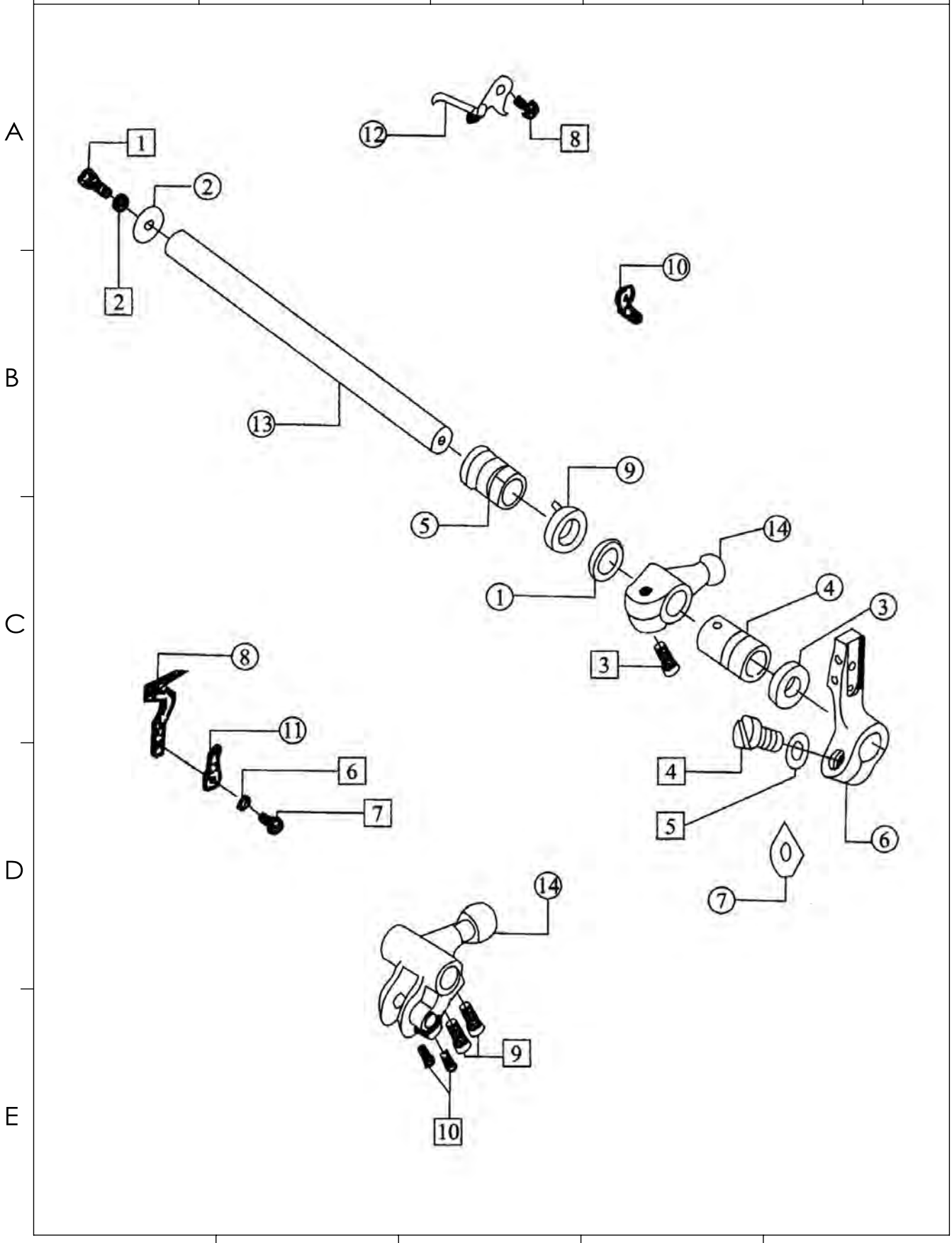

SiRUBA SEQUENCE LIST	Series	Parts Group	Subclass Remark	Page
	500Qe	09		1 / 1
				Date
				2024/07/30

序號 Ref.No	零件編號 Part No.	名稱	Name	數量 Amt. Req. 3	4	5
1	M9-1	厚墊圈	lower looper shaft copper bushing	1	1	0
	5M9-1	厚墊圈	washer	0	0	1
2	M9-2	下彎針軸墊圈	lower looper shaft washer	1	1	1
3	M9-3	油封	oil seal	1	1	2
4	M9-4	下彎針前套筒	lower looper tront bushing	1	1	1
5	M9-5	下彎針後套筒	lower looper rear bushing	1	1	1
6	M9-6	下彎針架	lower looper holder	1	1	1
7	M9-7	下彎針曲柄墊片	lower looper crank washer	2	2	5
8	M9-8	下彎針	lower looper	1	1	1
9	M9-9	銅墊圈	copper washer	1	1	1
10	M9-10	過線	thread quide	1	1	1
11	M9-11	下彎針過線	lower looper thread guide	1	1	1
12	M9-12	下彎針三孔過先線	lower looper 3-thread guide	1	1	1
13	M9-13	下彎針軸	lower looper shaft	1	1	0
	5M9-13	下彎針軸	lower looper shaft	0	0	1
14	M9-14	下彎針擺動曲柄	lower looper crank	1	1	0
	5M9-14	下彎針擺動曲柄	lower looper crank	0	0	1
1	S036	下彎針軸螺釘	lower looper shaft screw	1	1	1
2	W04	彈簧墊圈	elastic washer	1	1	1
3	S101	擺動曲柄螺釘	crank screw	1	1	1
4	S060	下彎針架釘	cower looper holder screw	1	1	1
5	W12	下彎針架墊圈	lower looper holder washer	1	1	1
6	W07	下彎針架墊圈	lower looper holder washer	1	1	1
7	S022	下彎針螺釘	lower looper screw	1	1	1
8	S032	下彎針過先螺釘	lower looper thread guide screw	1	1	1
9	S067	曲柄螺釘	crank screw	0	0	2
10	S015	曲柄螺釘	crank screw	0	0	2

A B C D E

1 2 3 4 5

SiRUBA PARTS LIST	Series	Parts Group	Subclass Remark	Page
	500Qe	10		1 / 1
				Date
				2024/07/30

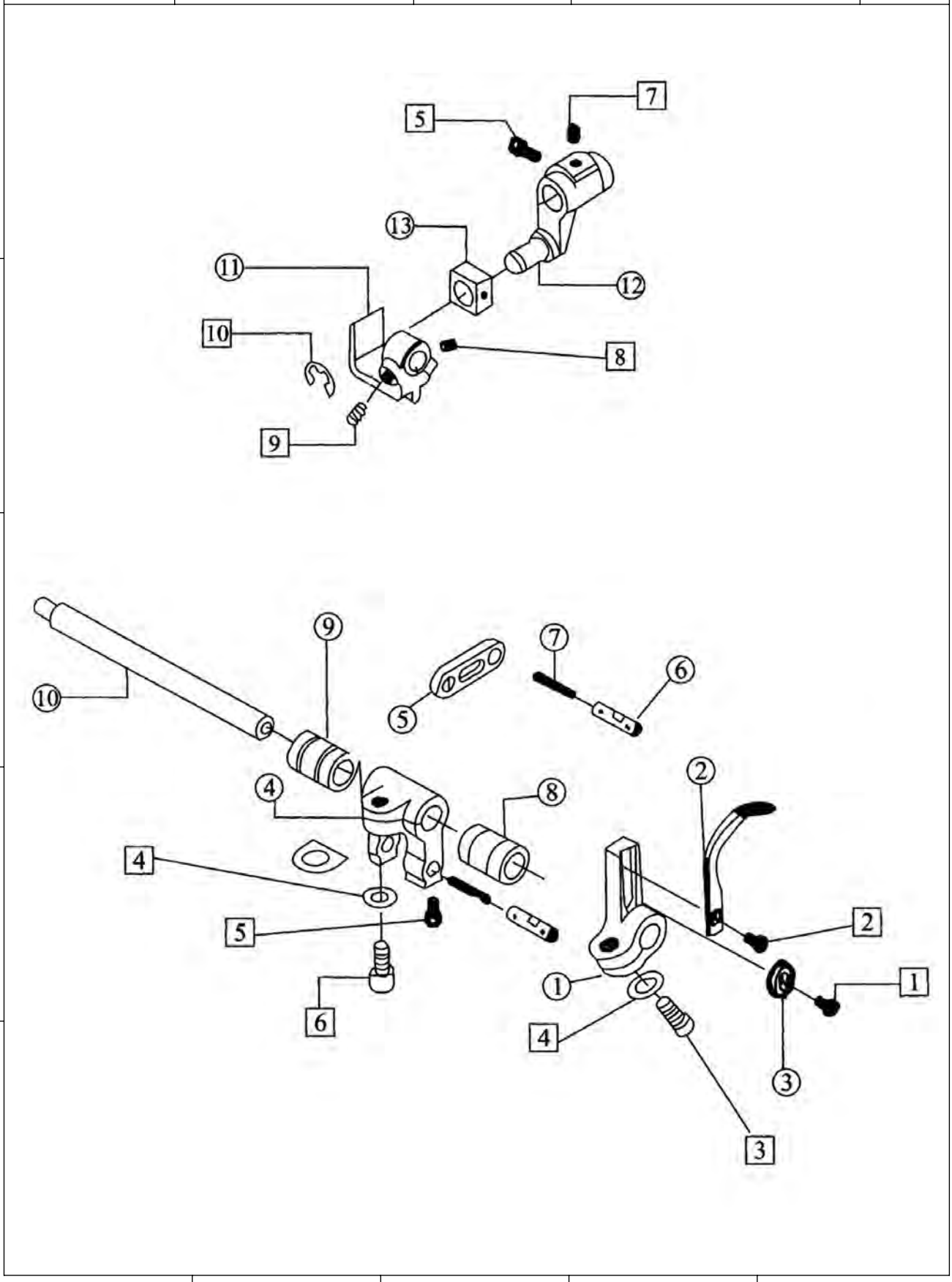

SiRUBA SEQUENCE LIST	Series	Parts Group	Subclass Remark	Page
	500Qe	10		1 / 1
				Date
				2024/07/30

序號 Ref.No	零件編號 Part No.	名稱	Name	數量 Amt. Req. 3	4	5
1	5M10-1	前彎針架	front looper shaft holder	0	0	1
2	5M10-2	前彎針	front looper	0	0	1
3	5M10-3	前彎針調節墊片	front looper shaft regulding washer	0	0	1
4	5M10-4	前彎針曲柄	frong looper cranlk	0	0	1
5	5M10-5	調節板	regulafting plate	0	0	1
6	5M10-6	調節板銷	tegulating palte pin	0	0	2
7	5M10-7	油線	oil thread	0	0	2
8	5M10-8	前彎針軸前套筒	front looper shaft front bushing	0	0	1
9	5M10-9	前彎針軸後套筒	front looper shaft rear bushing	0	0	1
10	5M10-10	前彎針軸	frong looper shaft	0	0	1
11	5M10-11	驅動座	driving lever	0	0	1
12	5M10-12	驅動曲柄	driving crank	0	0	1
13	5M10-13	前彎針滑塊	front looper slide block	0	0	1
1	S005	前彎針調節墊螺釘	front looper thread ruide screw	0	0	1
2	S016	前彎針固定螺釘	front looper guide set screw	0	0	1
3	S060	前彎針架螺釘	front looper holder set screw	0	0	1
4	W12	前彎針架螺釘墊	front looper holder screw washer	0	0	2
5	S028	前彎針曲柄螺釘	front looper crank screw	0	0	2
6	S101	前彎針曲柄緊固螺釘	front looper crank holder set screw	0	0	1
7	S043	驅動曲柄頂絲	nexagon socket sefscrew	0	0	1
8	S094	驅動曲柄座頂絲	driving levdr set screw	0	0	1
9	S093	驅動曲柄座螺釘	driving lever set screw	0	0	1
10	E03	卡簧	snapring	0	0	1

A B C D E

1 2 3 4 5

SiRUBA PARTS LIST	Series	Parts Group	Subclass Remark	Page
	500Qe	11		1 / 1
				Date
				2024/07/30

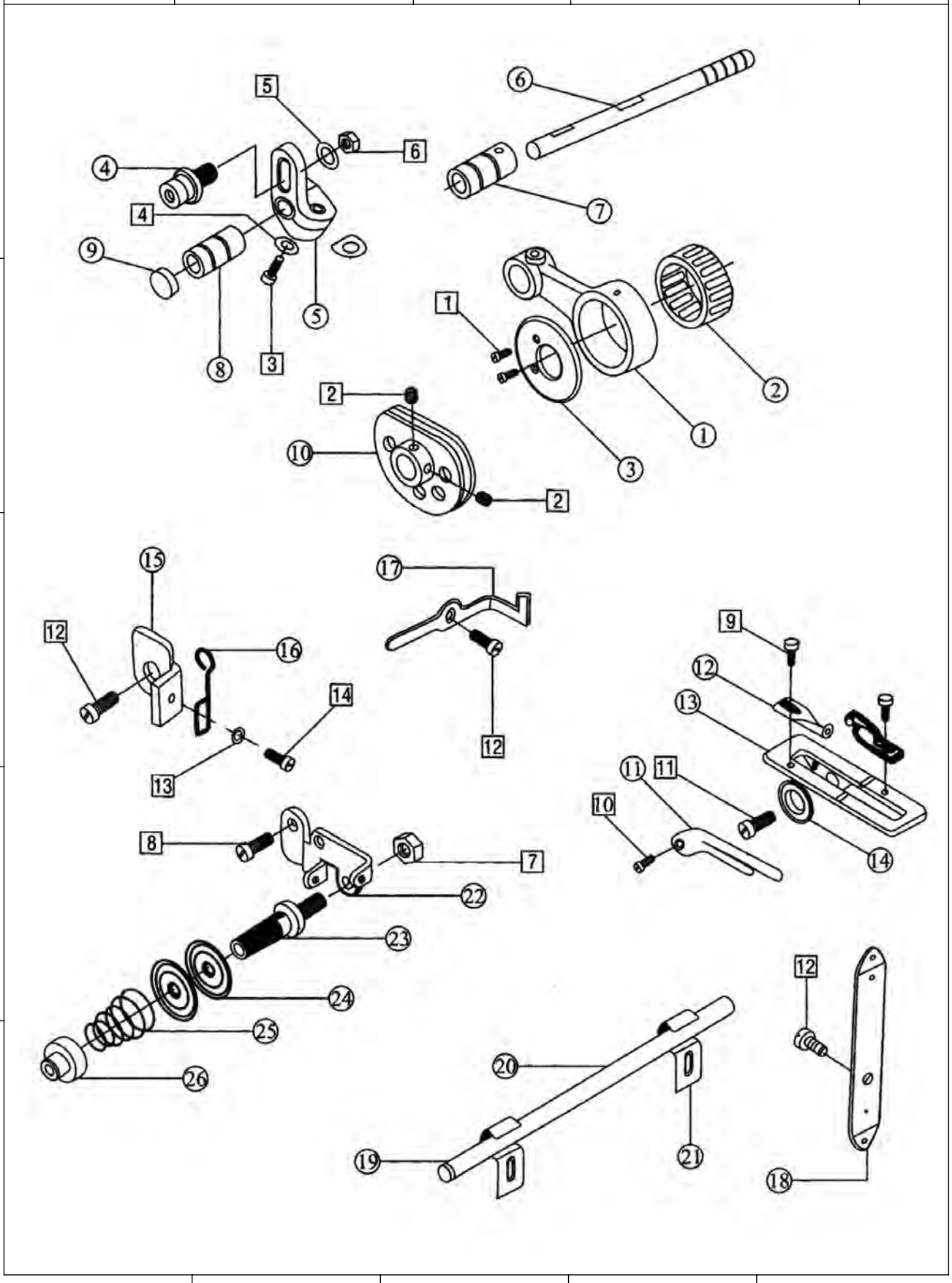

SiRUBA SEQUENCE LIST	Series	Parts Group	Subclass Remark	Page
	500Qe	11		1 / 1
				Date
				2024/07/30

序號 Ref.No	零件編號 Part No.	名稱	Name	數量 Amt. Req. 3	4	5
1	5M11-1	橫軸連桿	bearing snap uing screw	0	0	1
2	5M11-2	連桿滾針軸示	bfeat guide camtop	0	0	1
3	5M11-3	軸承擋圈	shaft snap crank screw	0	0	1
4	5M11-4	曲柄銷	shaft snap washer	0	0	1
5	5M11-5	橫軸曲柄	crank adjusting pin wather	0	0	1
6	5M11-6	橫軸曲柄軸	crank adjusting pin nut	0	0	1
7	5M11-7	橫軸右套筒	holder finger nut	0	0	1
8	5M11-8	橫軸左套筒	holder finger	0	0	1
9	5M11-9	油封	thread guide plate screw	0	0	1
10	5M11-10	打線凸輪	thread guide plate screw	0	0	1
11	5M11-11	導線板	thread guide finger set screw	0	0	1
12	5M11-12	過線板	thread guide for 2-thread screw	0	0	2
13	5M11-13	導線架	washer	0	0	1
14	5M11-14	波形墊圈	thread guide hook screw	0	0	1
15	5M11-15	限位板		0	0	1
16	5M11-16	過線環	thread guide hook	0	0	1
17	5M11-17	二眼過線板	2-thread thread guide	0	0	1
18	5M11-18	後導線板	rear thread guide finger set screw	0	0	1
19	5M11-19	導線管套	thread guide tube bushing	0	0	2
20	5M11-20	過線管	thread guide tube	0	0	1
21	5M11-21	過線管壓板	thread guide tube olamp	0	0	2
22	5M11-22	壓線器架	thread tension plate holder	0	0	1
23	5M11-23	夾線挺	holder spool	0	0	1
24	5M11-24	夾線片	holder spool	0	0	2
25	5M11-25	夾線簧	holder spool spring	0	0	1
26	5M11-26	調壓螺母軸承擋圈螺釘	presser nut	0	0	1
1	S002	軸承擋圈螺釘	bearing snap ring scrwe	0	0	2
2	S009	打線凸輪頂絲	cam set screw	0	0	2
3	S101	橫軸曲柄螺釘	crank set screw	0	0	1
4	W12	橫軸曲柄墊圈	crank washer	0	0	1
5	W06	曲柄調整銷墊圈	crank adjusting pin wather	0	0	1
6	N02	曲柄調整螺母	crank adjusting pin nut	0	0	1
7	N03	夾線器架螺母	thread tension scrwe nut	0	0	1
8	S032	夾線器架螺釘	thread tension screw	0	0	1
9	S003	過線板螺釘	thread guide plate screw	0	0	2
10	S017	導線板螺釘	thread guide plate screw	0	0	1
11	S038	導線架固定螺釘	thread guide finger seet screw	0	0	1
12	S027	二眼過線板螺釘	thread guide for 2-thread screw	0	0	3
13	W11	墊圈	washer	0	0	1
14	S020	迸線環螺釘	thread guide hook screw	0	0	1

A B C D E

1 2 3 4 5

SiRUBA PARTS LIST	Series	Parts Group	Subclass Remark	Page
	500Qe	12		1 / 1
				Date
				2024/07/30

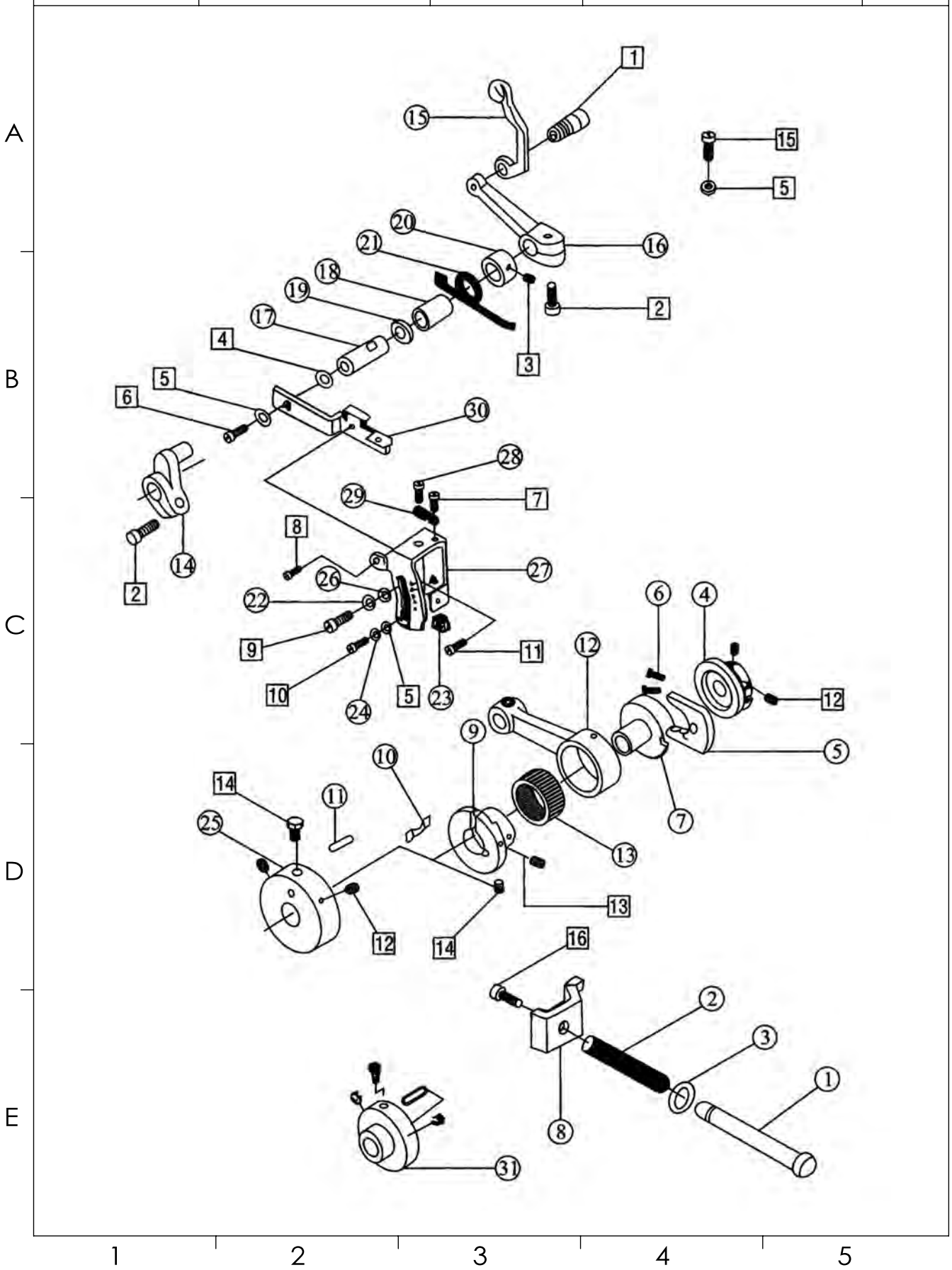

SiRUBA SEQUENCE LIST	Series	Parts Group	Subclass Remark	Page
	500Qe	12		1 / 1
				Date
				2024/07/30

序號 Ref.No	零件編號 Part No.	名稱	Name	數量 Amt. Req. 3	4	5
1	M12-1	送布調節器桿	stich length reglating shaft	1	1	1
2	M12-2	針距調節簧	spring	1	1	1
3	M12-3	送布調節器油封	oil washer	1	1	1
4	M12-4	針距調節凸輪組件	stitch length regulating cam asm	1	1	1
5	M12-5	針距調節滑塊	stitch length regulating block	1	1	1
6	M12-6	針距調節滑塊壓簧	stitch length regulating block spring	2	2	2
7	M12-7	針距凸輪	stitch length cam	1	1	1
8	M12-8	針距調節壓板	stitch length regulating plate	1	1	1
9	M12-9	送布凸輪	feed lingth cam	1	1	1
10	M12-10	送布凸輪簧	feed cam spring	1	1	1
11	M12-11	送布凸輪座銷	feed cam pin	1	1	1
12	M12-12	送布連桿	feed link	1	1	1
13	M12-13	滾動軸承	feed rod rolling pin bearing	1	1	1
14	M12-14	送布曲柄	feed crank	1	1	1
15	M12-15	差動連桿	differential link	1	1	1
16	M12-16	差動曲柄	dofferential crank	1	1	1
17	M12-17	銷子	pin	1	1	1
18	M12-18	差動軸套筒	differential shaft bearing	1	1	1
19	M12-19	油封	oil seal	1	1	1
20	M12-20	擋圈	snap ring	1	1	1
21	M12-21	彈簧	spring	1	1	1
22	M12-22	擋圈	washer	1	1	1
23	M12-23	調節滑塊	regalating block	1	1	1
24	M12-24	墊圈	washer	2	2	2
25	M12-25	送布凸輪座	feed cam	1	1	0
26	M12-26	墊圈	washer	1	1	1
27	M12-27	差動調節架	differential regulating holder	1	1	1
28	M12-28	調節螺釘	regulating screw	1	1	1
29	M12-29	卡簧	regulating screw spring	1	1	1
30	M12-30	差動調節桿	differential rigulating link	1	1	1
31	5M12-31	曲柄連桿凸輪	crank link cam	0	0	1
1	S096	差動迮枉螺釘	differential link screw	1	1	1
2	S101	差動曲柄螺釘	differential crank screw	2	2	2
3	S028	擋圈螺釘	snap ring screw	1	1	1
4	W15	墊圈	washer	1	1	1
5	S01	墊圈	washer	2	2	2
6	S037	差動調節桿螺釘	differential positon screw	1	1	1
7	S012	卡簧螺釘	spring screw	1	1	1
8	S034	差動調節架緊固螺釘	differential set screw	1	1	1
9	S079	螺釘	screw	1	1	1
10	S027	差動調節螺釘	differential positop screw	1	1	1
11	S032	差動調節架螺釘	differential positop screw	1	1	1
12	S043	針距調節齒輪螺釘	stith length	4	4	4
13	S008	送布凸輪調節螺釘	feed cam regulating screw	1	1	1
14	S011	送布凸輪螺釘	feed cam screw	1	1	1
15	S040	螺釘	screw	1	1	1
16	S036	針距調節壓板螺釘	stitch length screw	1	1	1

SiRUBA PARTS LIST	Series	Parts Group	Subclass Remark	Page
	500Qe	13		1 / 1
				Date
				2024/07/30

序號 Ref.No	零件編號 Part No.	名稱	Name	數量 Amt. Req.		
				3	4	5
8	S012	左曲柄螺釘	crank screw (left)	5	5	5
9	S069	曲柄滑動蓋螺釘	crank slide block cover screw	2	2	2
10	S034	牙叉叉塊螺釘II	tooth rorks screw	1	1	1
11	S046	牙叉叉塊螺釘I	tooth rorks screw	4	4	4
12	S031	螺釘	screw	1	1	1
13	N02	右送布曲柄銷螺母	reed crank pin shaft nut	1	1	1

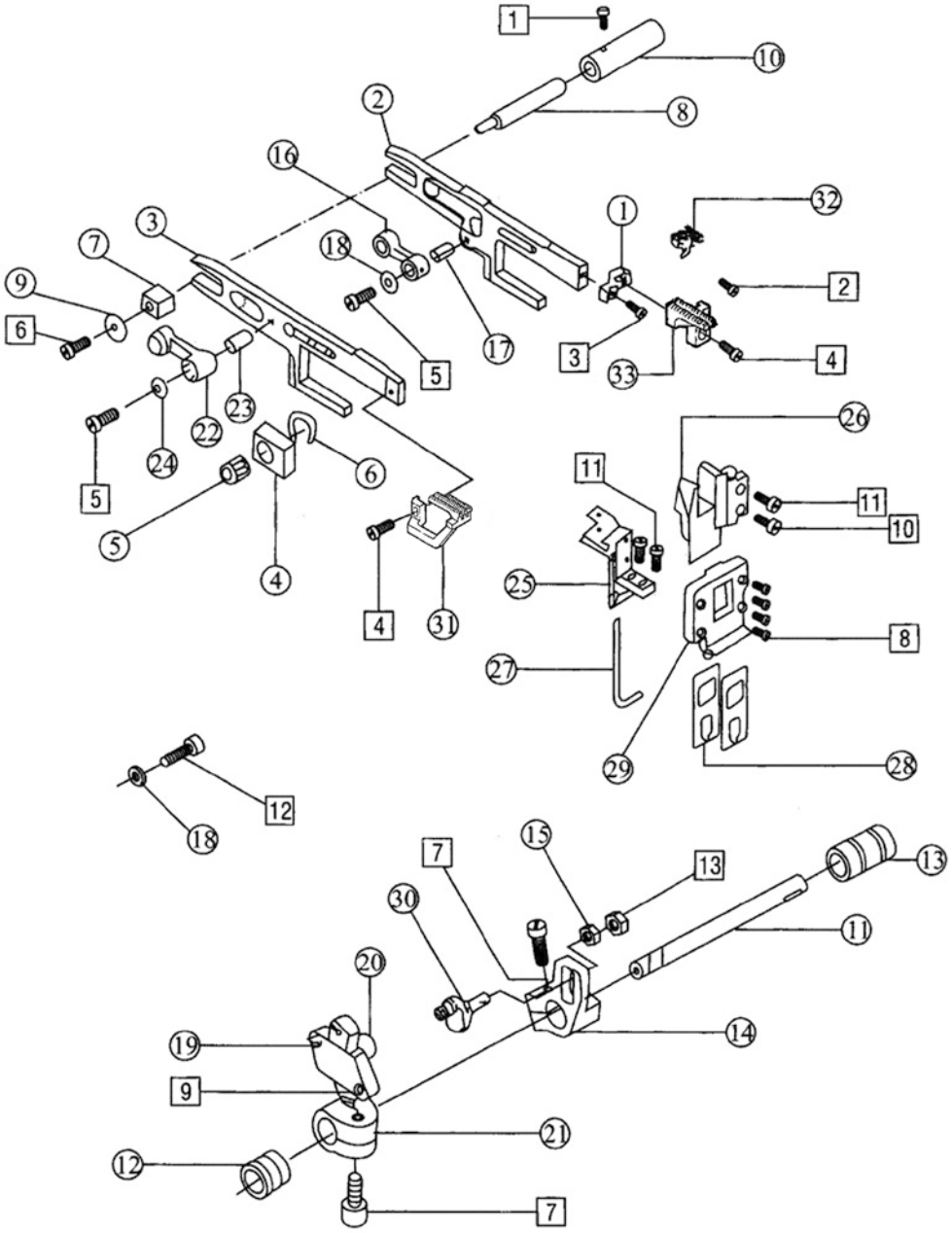

SiRUBA SEQUENCE LIST	Series	Parts Group	Subclass Remark	Page
	500Qe	13		1 / 1
				Date
				2024/07/30

序號 Ref.No	零件編號 Part No.	名稱	Name	數量 Amt. Req. 3	4	5
1	M13-1	牙連接板	doy link plate	1	1	1
2	M13-2	送布牙架	feed doy holder	1	1	1
3	M13-3	差動牙架	differential feed doy holear	1	1	1
4	M13-4	抬牙滑塊	feed doy lift slide block	1	1	1
5	M13-5	抬牙滑塊滾針軸承	feed doy lift slide block shaft bearing	1	1	1
6	M13-6	卡簧	snap ring	1	1	1
7	M13-7	差動送布滑塊	differential feed slide block	1	1	1
8	M13-8	滑塊偏心軸	slide block eccentric share	1	1	1
9	M13-9	差動送布滑塊偏心墊	direrential feed slide block eccentic washer	1	1	1
10	M13-10	滑塊偏心軸套筒	slide block eccentric shaft bushing	1	1	1
11	M13-11	送布軸	feed shaft	1	1	1
12	M13-12	送布軸左套筒	feed shaft bashing (left)	1	1	1
13	M13-13	送布軸右套筒	feed shaft bashing (right)	1	1	1
14	M13-14	送布調整曲柄	feed regulating crank	1	1	1
15	M13-15	墊圈	washer	1	1	1
16	M13-16	送布牙架連桿	feed doy holder link	1	1	1
17	M13-17	送布牙架桿套	feed doy holer link bashing	1	1	1
18	M13-18	送布牙架連桿套墊圈	differetial feed doy holder link bashing	2	2	2
19	M13-19	曲柄滑塊蓋板	crank slide block cover	1	1	1
20	M13-20	曲柄滑塊	crank slide block	1	1	1
21	M13-21	差動牙調節曲倆	feed regulating crank	1	1	1
22	M13-22	差動牙架連桿	differential feed doy holder link	1	1	1
23	M13-23	差動牙架連桿套	differential feed doy holder link bushing	1	1	1
24	M13-24	差動牙架連桿套墊圈	pifferential feed doy holder link bushing washer	2	2	2
25	M13-25	擋油板	screw oil plate	1	1	1
26	M13-26	牙架導軌	feed doy carrier connection rod	1	1	1
27	M13-27	密封圈	sealing connecting ring	1	1	1
28	M13-28	活動油封	adjustable oil seal	2	2	2
29	M13-29	密封導架	sealing connecting rod	1	1	1
30	M13-30	送布牙連桿偏心軸	feed doy link ecentric shaft	1	1	0
	5M13-30	送布牙連桿偏心軸	feed doy link ecentric shaft	0	0	1
31	M13-31	差動牙	differential dog	1	1	0
	5M13-31	差動牙	differential dog	0	0	1
32	M13-32	輔送布牙	main feed dog	1	1	0
	5M13-32	輔送布牙	main feed dog	0	0	1
33	M13-33	主送布牙	main feed dog	1	1	0
	5M13-33	主送布牙	main feed dog	0	0	1
1	S028	調牙套筒螺釘	regulating bushing	1	1	1
2	S005	輔助調牙套筒螺釘	feed dog bushing screw	1	1	1
3	S024	牙架接板螺釘	screw	1	1	1
4	S100	主送布牙螺釘	main fed dog screw	2	2	2
5	S029	左右牙叉連桿螺釘	dog hloder link	2	2	2
6	S006	抬牙布曲柄螺釘	feed dog lift slide block screw	1	1	1
7	S101	右送布曲柄螺釘	feed shaft crank screw (right)	2	2	2

SiRUBA PARTS LIST	Series	Parts Group	Subclass Remark	Page
	500Qe	14		1 / 1
				Date
				2024/07/30

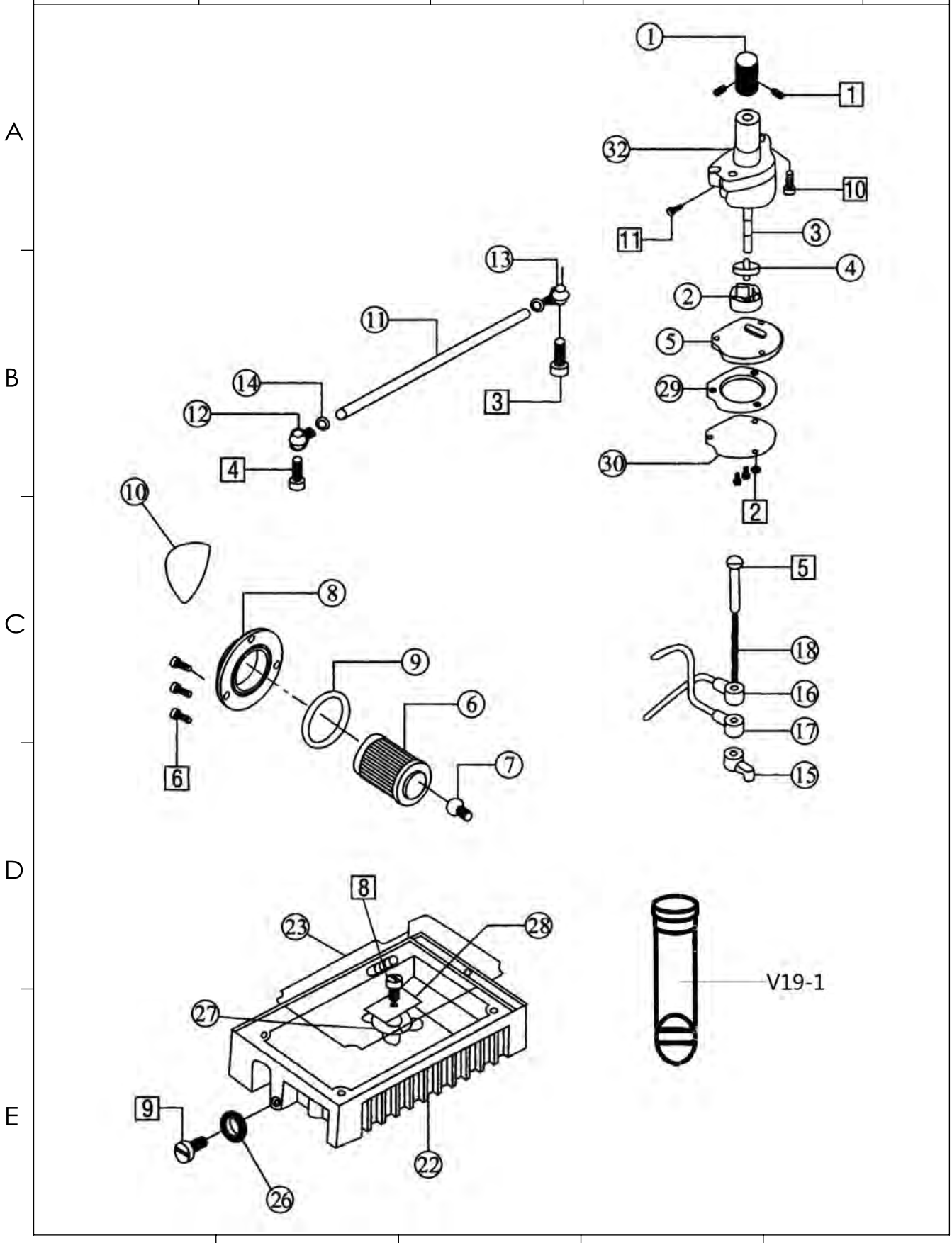

SiRUBA SEQUENCE LIST	Series	Parts Group	Subclass Remark	Page
	500Qe	14		1 / 1
				Date
				2024/07/30

序號 Ref.No	零件編號 Part No.	名稱	Name	數量 Amt. Req. 3	4	5
1	M14-1	油泵蝸輪	oil pump worm gear	1	1	1
2	M14-2	滑塊泵五星齒輪套	oil pump rotator bushing	1	1	1
3	M14-3	油泵齒輪長軸	oil pump rptatpr shaft	1	1	1
4	M14-4	油泵五星齒輪	oil pump rotator	1	1	1
5	M14-5	油泵罩板	oil pump cover plate	1	1	1
6	M1 -6	濾油器	oil clearner	1	1	1
8	M14-8	濾油器蓋	oil clerner cover	1	1	1
9	M14-9	濾油器蓋密封圈	oil clerner cover seal ring	1	1	1
10	M14-10	潤滑提示	ingicaing plate	1	1	1
11	M14-11	油管	oil tube	1	1	1
12	M14-12	油管接頭I	oil tube joint	1	1	1
13	M14-13	油管接頭II	oil tube joint	1	1	1
14	M14-14	油管卡簧	oil tube shap ring	4	4	4
15	M14-15	潤滑套	lubrcate bushing	1	1	1
16	M14-16	上配油器	upper screen	1	1	1
17	M14-17	下配油器	lower screen	1	1	1
18	M14-18	調節銷	regulating pin	1	1	1
22	M14-22	油盤	oil pan	1	1	1
23	M14-23	油盤墊圈	oil pan washer	1	1	1
26	M14-26	堵油墊圈	oil seal	1	1	1
27	M14-27	油盤磁鐵	oil pan magnet	1	1	1
28	M14-28	濾油盤磁鐵蓋	oil pan magnet cover	1	1	1
29	M14-29	濃油網固定架	oil screen holder	1	1	1
30	M14-30	濾油網	oil screen felt	1	1	1
32	M14-32	油泵體組件	oil pump asm	1	1	1
1	S057	油泵蝸輪螺釘	oil pamp worm gear screw	2	2	2
2	S024	濾油網螺釘	oil cleaner screw	3	3	3
3	S086	油管接頭II螺釘	oil tube joint screw	1	1	1
4	S063	油管接頭I螺釘	oil tube joint screw	1	1	1
5	S052	配油器螺釘	oil screen screw	1	1	1
6	S039	濾油器蓋螺釘	oil screen cover screw	3	3	3
7	S042	油量顯示器支架螺釘	oil boy finger screw	2	2	2
8	S037	油盤磁鐵蓋螺釘	oil pan magnet cover screw	1	1	1
9	S066	油盤放油螺釘	oil pan oil screw	1	1	1
10	S048	油泵螺釘	oil pump screw	1	1	1
11	S065	油泵體螺釘	oil pumps asm svrew	1	1	1

A B C D E

1 2 3 4 5

SiRUBA PARTS LIST & SEQUENCE LIST	Series	Parts Group	Subclass Remark	Page
	500Qe	15		1 / 1
				Date
				2024/07/30

序號 Ref.No	零件編號 Part No.	名稱	Name	數量 Amt. Req. 3	4	5
1	M15-1	油堵	oil seal	1	1	1
2	M15-2	機針冷卻器	needle cooler	1	1	0
	5M15-2	機針冷卻器	needle cooler	0	0	1
3	M15-3	油管	oil tube bracker	1	1	1
4	M15-4	矽油冷卻油線	oil wick	1	1	1
5	M15-5	下矽油盒蓋	lower oil cover	1	1	1
6	M15-6	下矽油盒	lower oil box	1	1	1
7	M15-7	油棉	oil felt	1	1	0
	5M15-7	油棉	oil felt	0	0	1
8	M15-8	油線	oil wick	1	1	1
9	M15-9	送料支架	cloth guide holder	1	1	1
10	M15-10	鉸鍊板	oinge plate	1	1	1
11	M15-11	矽油棉塊	oil felt block	1	1	1

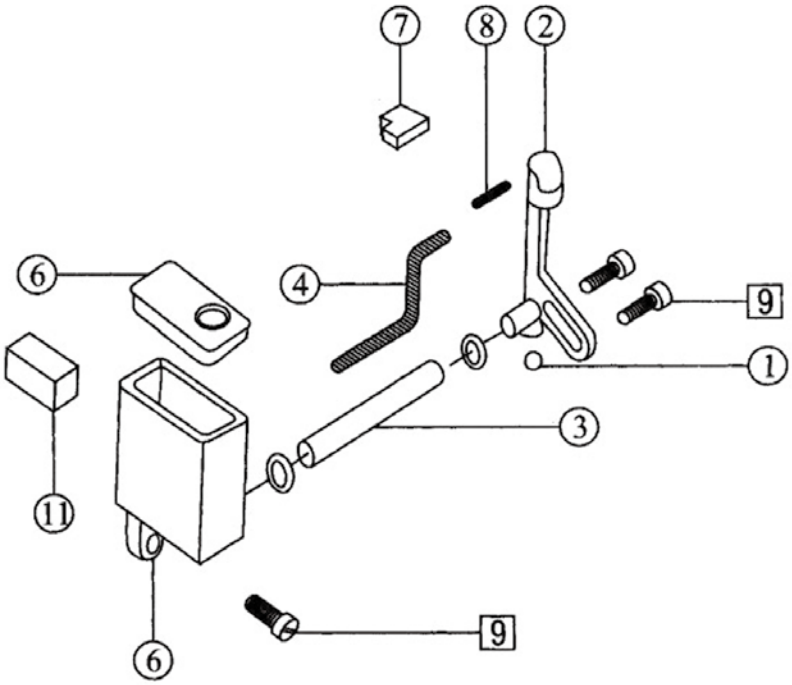

SiRUBA PARTS LIST	Series	Parts Group	Subclass Remark	Page
	500Qe	16		1 / 1
				Date
				2024/07/30

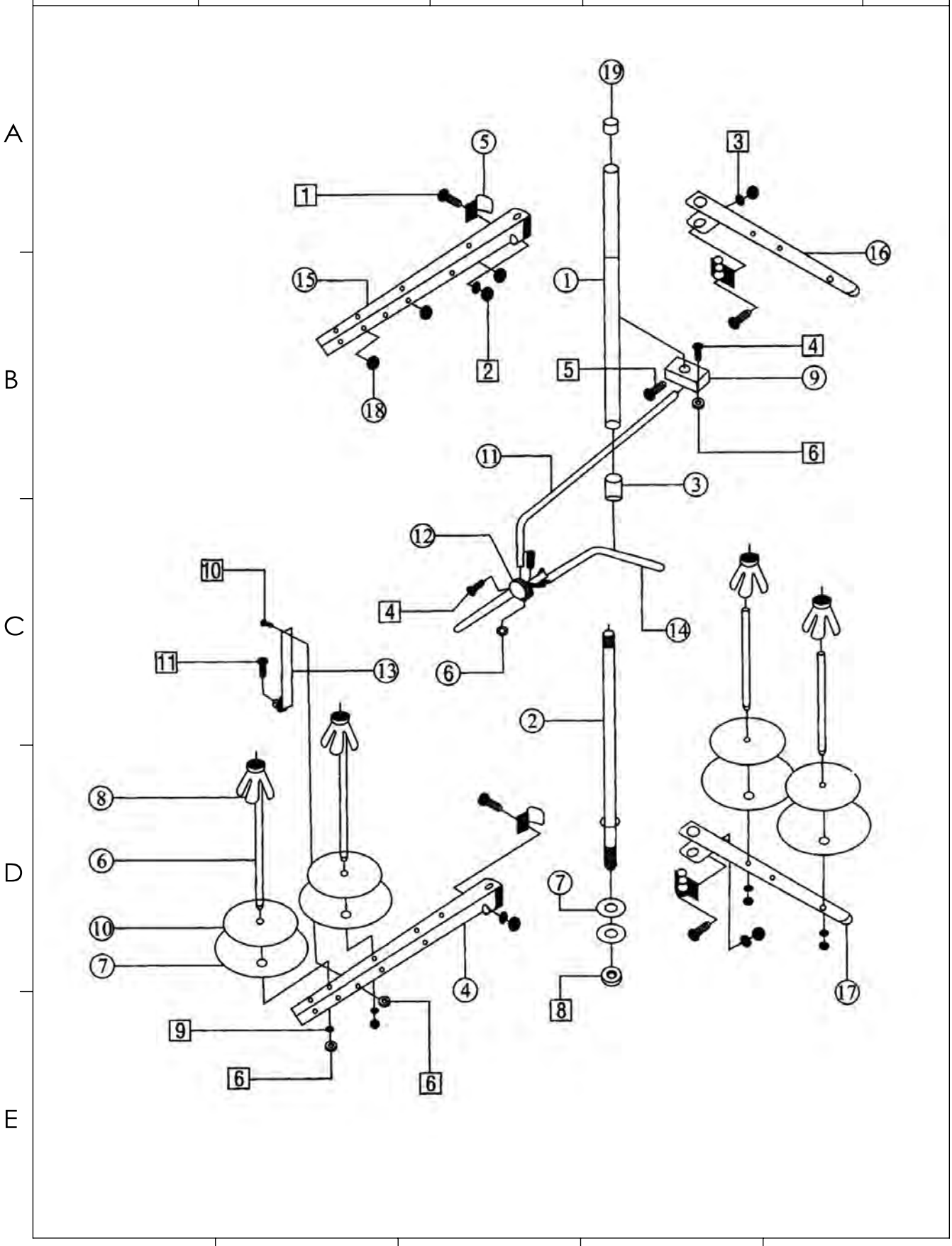

SIRUBA SEQUENCE LIST	Series	Parts Group	Subclass Remark	Page
	500Qe	16		1 / 1
				Date
				2024/07/30

序號 Ref.No	零件編號 Part No.	名稱	Name	數量 Amt. Req. 3	4	5
1	M16-1	上管	upper thread columm	1	1	1
2	M16-2	下管	lower thread columm	1	1	1
3	M16-3	套	bushing	1	1	1
4	M16-4	長托線架	long thread spool troy bracket	1	1	1
5	M16-5	導線環	thread guide hook	4	4	4
6	M16-6	線托棒	spool pin	3	4	5
7	M16-7	線盤	spool tray	3	4	5
8	M16-8	線圈定位套	centering device	3	4	5
9	M16-9	棒架	clamp plate	1	1	1
10	M16-10	線盤墊	spool tray cushion	3	4	5
11	M16-11	導線棒	thread tuide connecting bar	1	1	1
12	M16-12	導紗接頭	thread guide joint	1	1	1
13	M16-13	固定板	thread stamcl holder	1	1	1
14	M16-14	導線棒	thread guide bar	1	1	1
15	M16-15	大導線棒	thread spool trav bracket	1	1	1
16	M16-16	過線板	thread guide plate	1	1	1
17	M16-17	托線架	thread spool tray sracket	1	1	1
18	M16-18	過線環	thread guide hook	3	3	3
19	M16-19	棒帽	rubber seal	1	1	1
1	S088	導線環螺釘	thread guide hook screw	4	4	4
2	N06	導線環螺母	thread guide hook screw	4	4	4
3	W02	導線環墊圈	thread guide washer	4	4	4
4	S075	棒架螺釘	clamp plate screw	3	3	3
5	S051	棒架螺釘	styck holder screw	1	1	1
6	N04	螺母	nut	8	8	8
7	W16	下管墊圈	lower washer	2	2	2
8	N05	螺母	nut	1	1	1
9	W05	墊圈	washer	4	4	4
10	S087	固定板螺釘	thread stand holder screw	1	1	1
11	S089	固定板連接螺釘	thread stand holder join screw	1	1	1

A B C D E

1 2 3 4 5

SiRUBA PARTS LIST	Series	Parts Group	Subclass Remark	Page
	500Qe	17		1 / 1
				Date
				2024/07/30

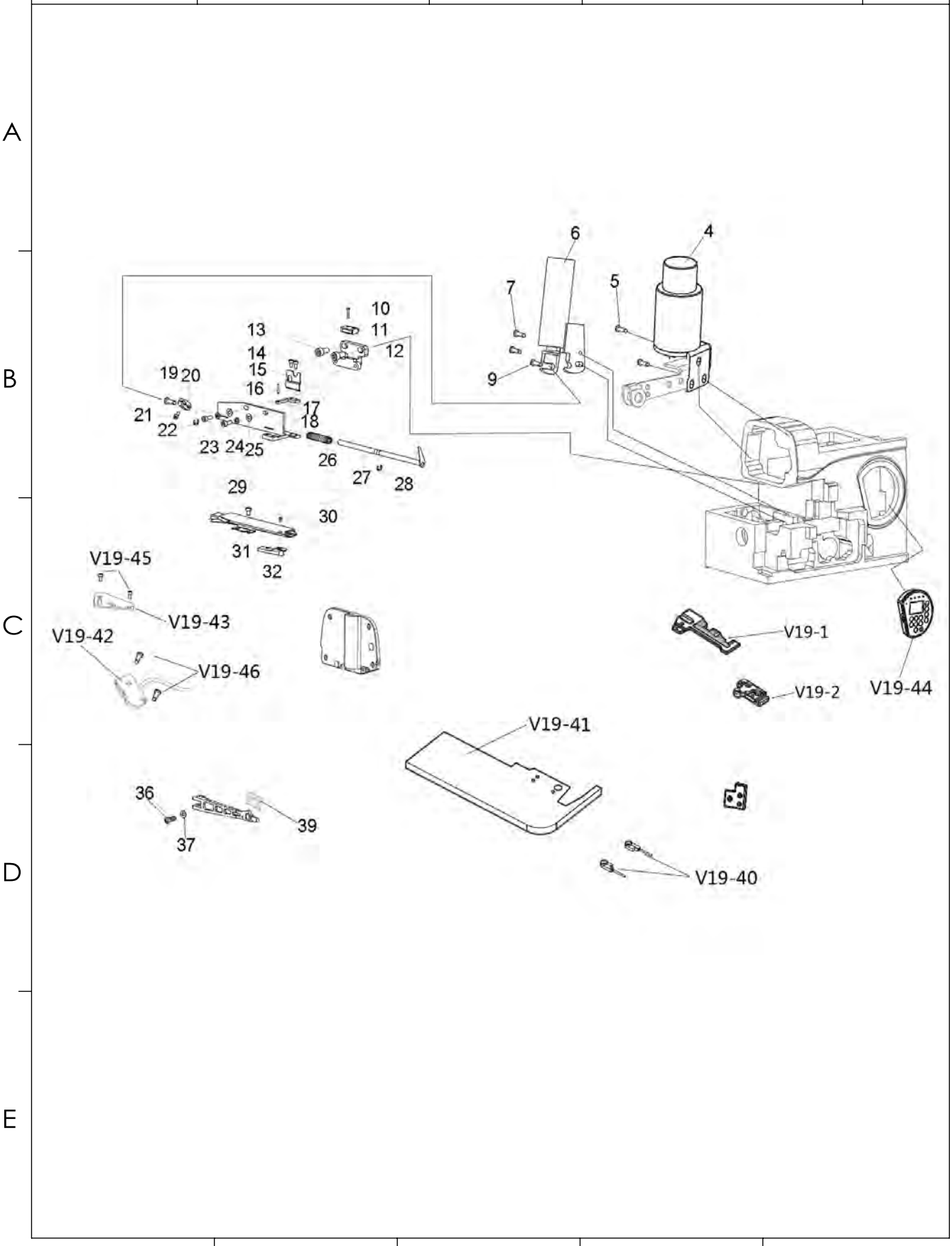

SiRUBA SEQUENCE LIST	Series	Parts Group	Subclass Remark	Page
	500Qe	17		1 / 1
				Date
				2024/07/30

序號 No.	零件編號 Pars No.	名　稱	Description	數量 Number
4	V19-4	抬壓腳電磁鐵	electromagnet assembly	1
5	V19-5	螺釘M6x12	Screw	2
6	V19-6	電磁鐵組件	electromagnet assembly	1
7	V19-7	螺釘M6x12	Screw	2
9	V19-9	銷子	Pin	1
10	V19-10	螺釘	Screw	2
11	V19-11	安全開關組件	Safety swich assembly	1
12	V19-12	固定板	Retaining cover	1
13	V19-13	螺釘	Screw	2
14	V19-14	螺釘	Screw	6
15	V19-15	擋板1	Striker (plate)	1
16	V19-16	銷	latch	1
17	V19-17	定刀	stationary knife	1
18	V19-18	切刀安裝座	cutter install seat	1
19	V19-19	切刀連桿銷	cutter connecting rod pin	1
20	V19-20	切刀連桿	cutter connecting rod	1
21	V19-21	螺釘	screw	1
22	V19-22	5擋圈	split washer	1
23	V19-23	螺釘	screw	1
24	V19-24	墊圈	washer	5
25	V19-25	墊圈	washer	5
26	V19-26	彈簧	spring	1
27	V19-27	動刀組件	The movable knife assembly	1
28	V19-28	開口擋圈	split washer	1
29	V19-29	螺釘	screw	2
30	V19-30	螺釘	screw	7
31	V19-31	吸風組件	Suction assembly	1
32	V19-32	後切接收傳感器組件	The reicever component	1
36	V19-36	螺釘M4x7.5	Screw	1
37	V19-37	墊片	Washer	1
39	V19-39	壓腳臂磁鐵	Magnetic Iron	1
40	V19-40	光眼	optical sensor	1
41	V19-41	縫台	Sewing table	1
42	V19-42	剪線開關	Thread cutting switch	1
43	V19-43	支架	Support	1
44	V19-44	操作面板	Guidance panel	1
45	V19-45	螺釘	Screw	2
46	V19-46	螺釘	Screw	2

A B C D E

1 2 3 4 5

SiRUBA PARTS LIST & SEQUENCE LIST	Series	Parts Group	Subclass Remark	Page
	500Qe	18		1 / 1
				Date
				2024/07/30

序號 Ref.No	零件編號 Part No.	名稱	Name	數量 Amt. Req.		
				3	4	5
1	M17-1	機頭托盤	machine head plate	1	1	1
2	M17-2	減震墊組件	head shockproof cusion	3	3	3
3	M17-3	螺釘M8x55	screw	4	4	4
4	M17-4	托盤螺釘固定頭	screw	4	4	4
5	M17-5	大墊圈	pig washer	12	12	12
6	M17-6	托盤連接套	plate doy link bushing	4	4	4
7	M17-7	排料槽座	row material trollgh bracket	1	1	1
8	M17-8	排料槽(1)	row material trough (1)	1	1	1
9	M17-9	排料槽(2)	row material trough (2)	1	1	1
10	M17-10	機頭減震墊	head shockproof cushion	1	1	1
1	S076	排料槽座螺釘	row material seat screw	3	3	3
2	W13	排料槽墊圈	row material washer	4	4	4
3	S077	排料槽螺釘	row material screw	4	4	4

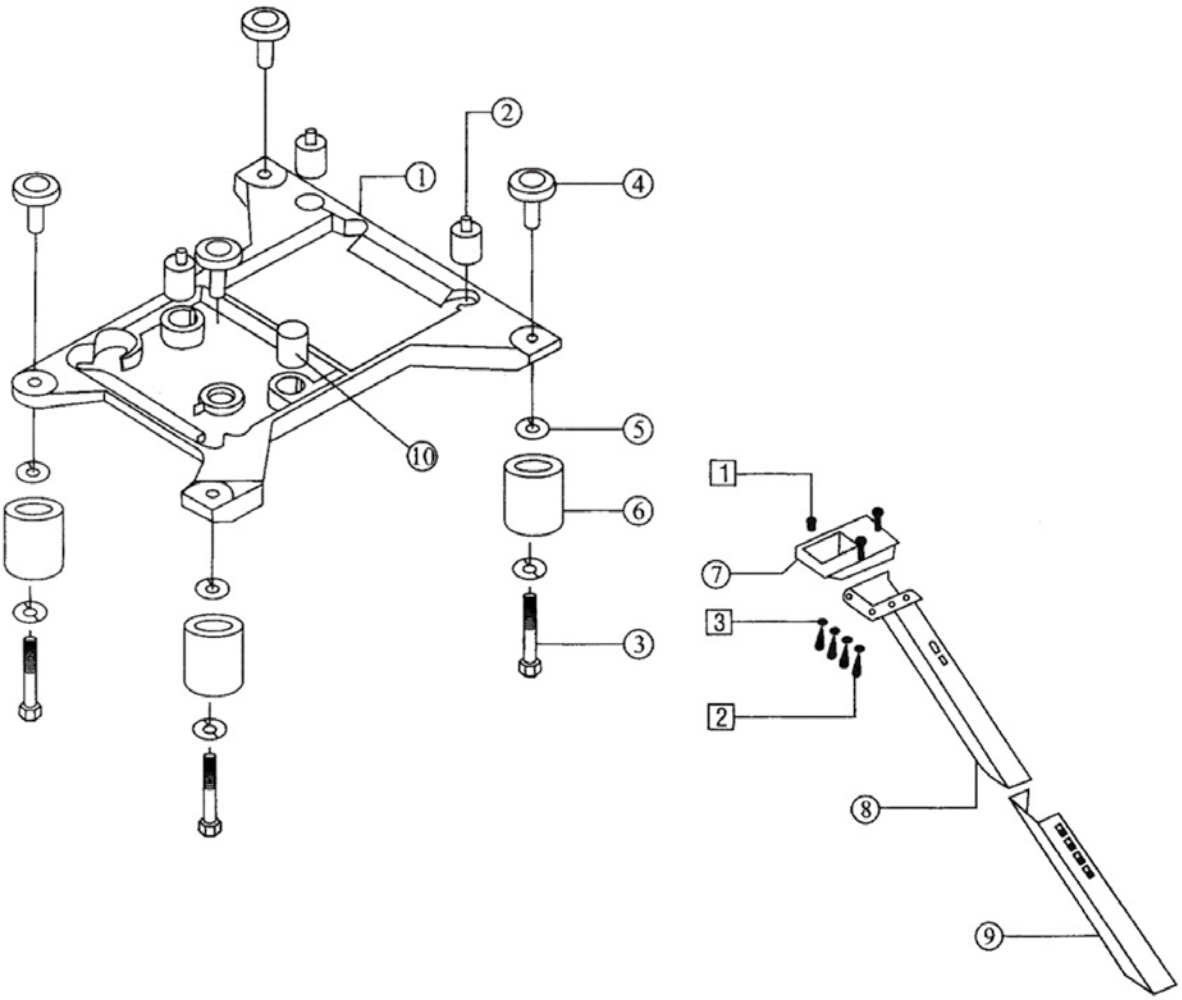

SiRUBA PARTS LIST	Series	Parts Group	Subclass Remark	Page
	500Qe	19		1 / 1
				Date
				2024/07/30

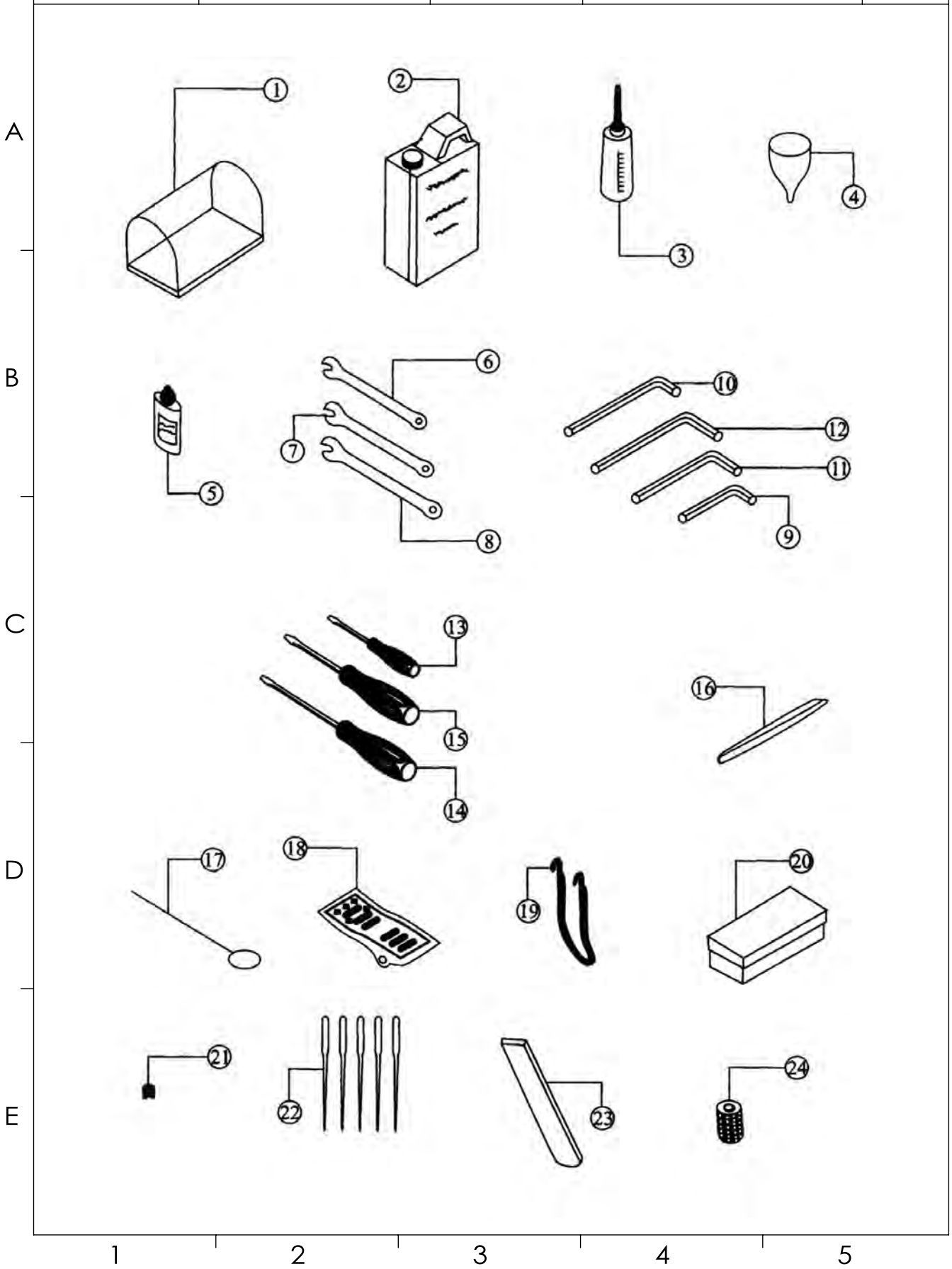

SiRUBA SEQUENCE LIST	Series	Parts Group	Subclass Remark	Page
	500Qe	19		1 / 1
				Date
				2024/07/30

序號 Ref.No	零件編號 Part No.	名稱	Name	數量 Amt. Req. 3	4	5
1	M18-1	機罩	machine head cover	1	1	1
2	M18-2	油壺/1000cc	oil can/100cc	1	1	1
3	M18-3	注油壺	notes oil	1	1	1
4	M18-4	漏斗	tundish	1	1	1
5	M18-5	油壺/50cc	oil can/50cc	1	1	1
6	M18-6	扳手(6mm)	spanner	1	1	1
7	M18-7	扳手(7mm)	spanner	1	1	1
8	M18-8	扳手(8mm)	spanner	1	1	1
9	M18-9	內六角扳手(1.5mm)	cross screw driver	1	1	1
10	M18-10	內六角扳手(2mm)	cross screw driver	1	1	1
11	M18-11	內六角板手(5mm)	cross screw driver	1	1	1
12	M18-12	內六角扳手(6mm)	cross screw driver	1	1	1
13	M18-13	螺絲刃(小)	screw driver	1	1	1
14	M18-14	螺絲刀(中)	screw driver	1	1	1
15	M18-15	螺絲刀(大)	screw driver	1	1	1
16	M18-16	鑷子	tweezer	1	1	1
17	M18-17	金屬線	metal guide	1	1	1
18	M18-18	腳踏板	presser foot base	1	1	1
19	M18-19	腳踏板鏈	presser foot base chain	1	1	1
20	M18-20	附件盒	affach nentbox	1	1	1
21	S009	頂針螺釘	thimble screw	1	1	1
22	DCX27	機針	needle	4	4	4
23	M6-17	下刀	lower knife	1	1	1
24	M15-6	過濾器	oil filter	1	1	1

A B C D E

1 2 3 4 5

高林股份有限公司
KAULIN MFG. CO., LTD.

由於對產品的改良及更新，本產品零件圖及外觀的修改恕不事先通知！
The specification and/or appearances of the equipment described in this parts list are subject to change because of modification which will without previous notice.

HBL-20W03.JUL.2024