Parts Chart for SINGER 460k43 460k45 460k73 and 460k75 Machines

orm K6781
576)

*Trademark of the Singer Company.
Copyright (C) 1969 by the Singer Company.
All rights reserved throughout the World.

Printed in
Great Britain.

LVM - ORIGINAL

Accessories

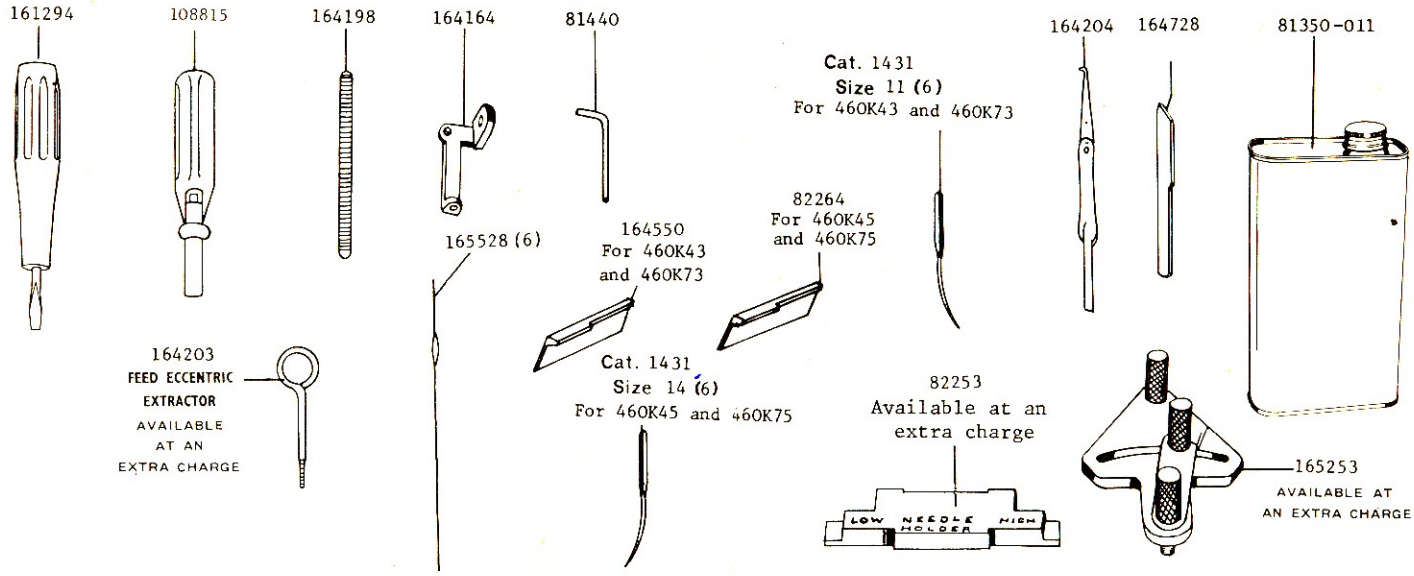

CHIP CHUTE

SUPPLIED ONLY WHEN SPECIFIED ON ORDER, AT NO EXTRA CHARGE, FOR ALL TERRITORIES EXCEPT U.S.A. AND CANADA. REGULARLY SUPPLIED FOR U.S.A. AND CANADA.

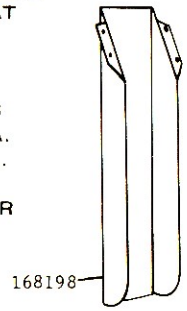

BELT GUARD

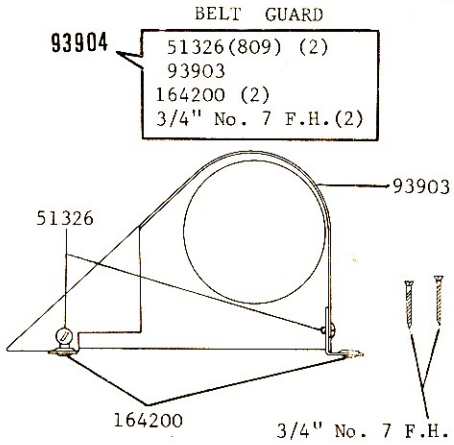

THREAD UNWINDERS

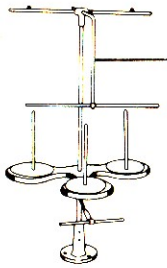

FOOT LIFTER

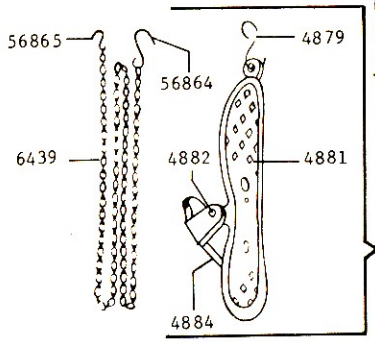

NOTE: As the stand recommended for these machines include a Foot Lifter Treadle, only Chain **6439** will be sent with machine. If fitted to a stand or other equipment which does not include a Foot Lifter Treadle, orders should state that Treadle **4885** is required and it will be furnished without charge.

KNEE LIFTER

AVAILABLE IN PLACE OF FOOT LIFTER IF SPECIFIED ON ORDER.

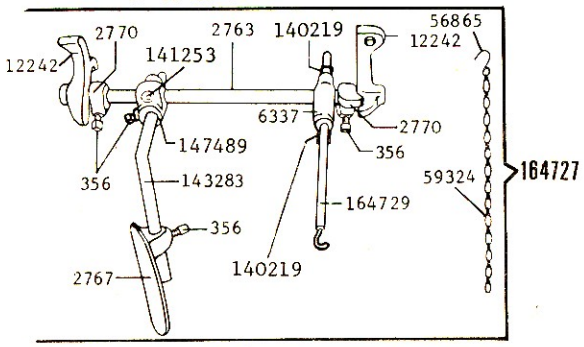

MACHINE BASE

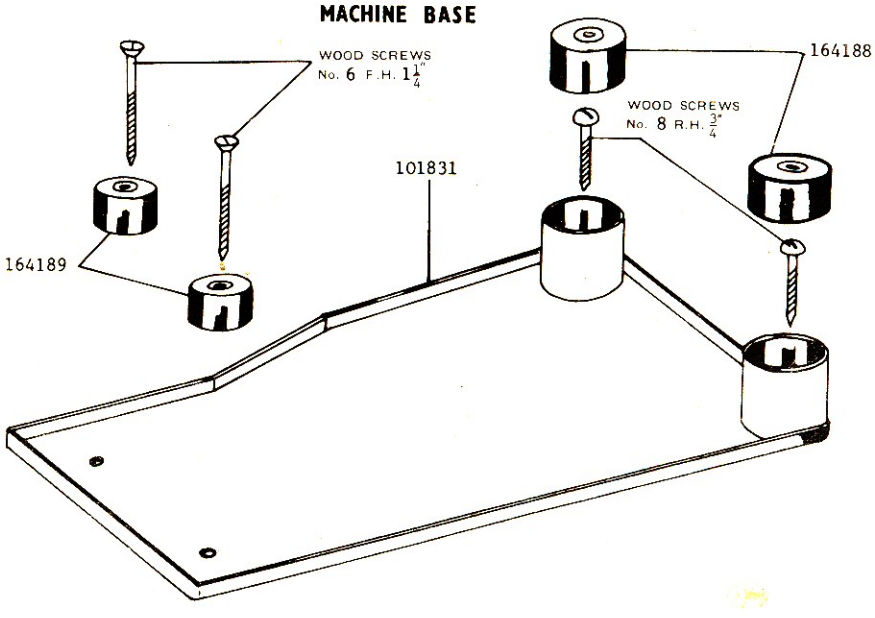

SINGER 460k43 460k45 460k73 and 460k75

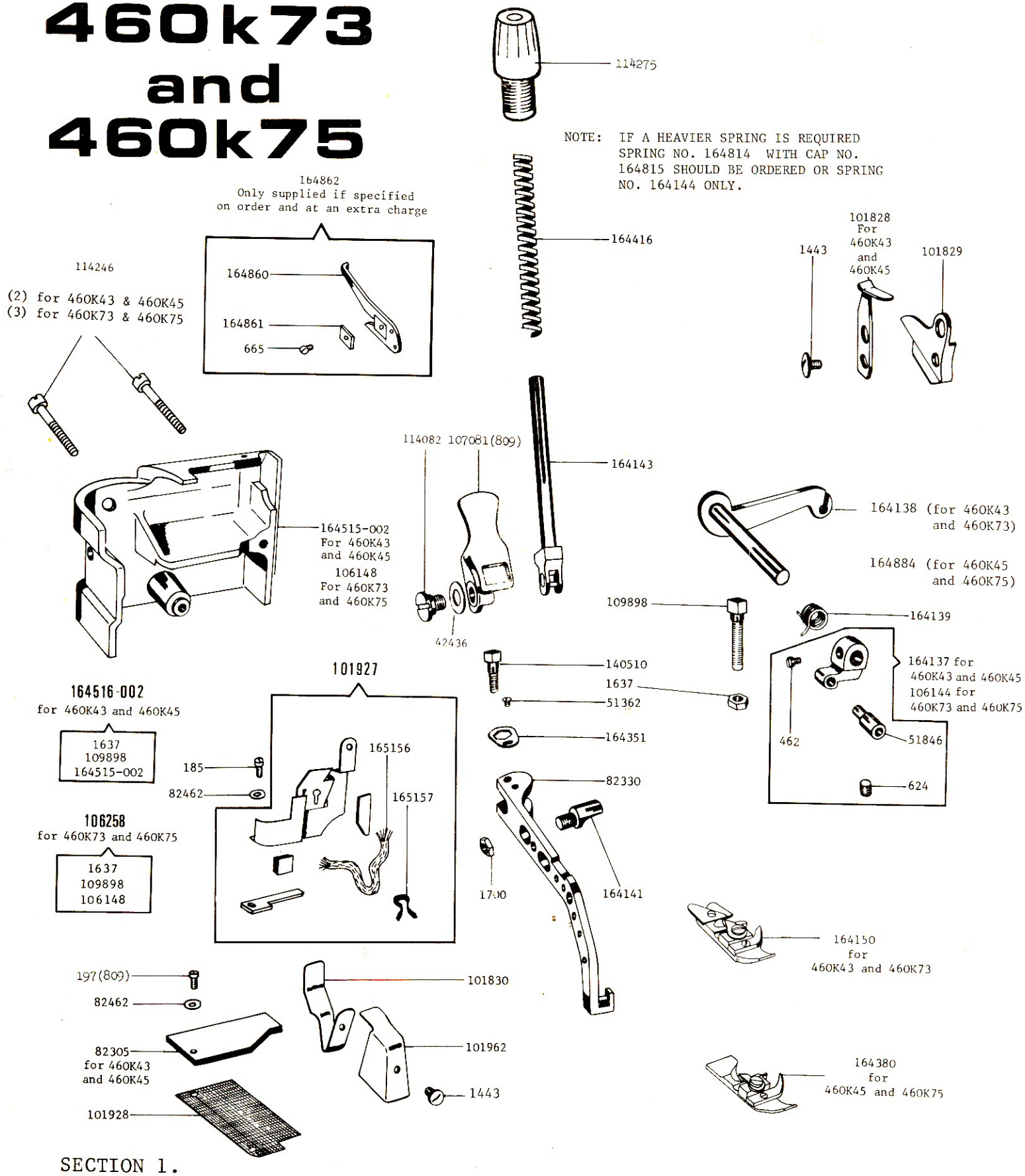

SECTION 1.

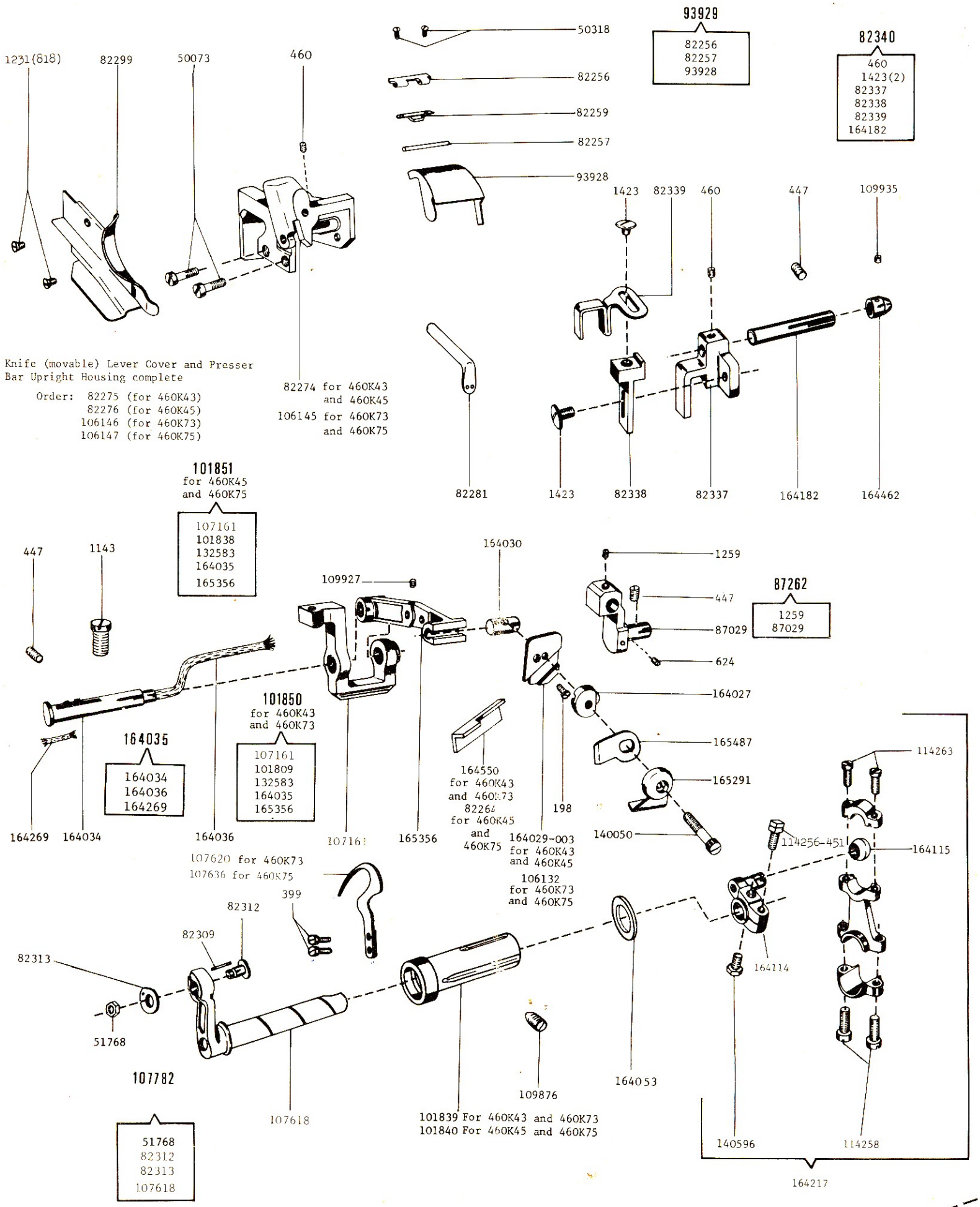
1231(818)
82299
50073
460
50318
82256
82259
82257
93928
93929
82256
82257
93928
82340
460
1423(2)
82337
82338
82339
164182
1423
82339
460
447
109935
Knife (movable) Lever Cover and Presser Bar Upright Housing complete
Order: 82275 (for 460K43)
82276 (for 460K45)
106146 (for 460K73)
106147 (for 460K75)
82274 for 460K43 and 460K45
106145 for 460K73 and 460K75
82281
1423
82338
82337
164182
164462
101851
for 460K45 and 460K75
107161
101838
132583
164035
165356
447
1143
164030
1259
109927
447
87262
1259
87029
87029
624
164027
101850
for 460K43 and 460K73
107161
101809
132583
164035
165356
164035
164034
164036
164269
165487
114263
165291
164550
for 460K43 and 460K73
82264
for 460K45 and 460K75
198
140050
114256-451
164115
164269
164034
164036
107161
165356
164029-003
for 460K43 and 460K45
106132
for 460K73 and 460K75
107620 for 460K73
107636 for 460K75
399
82312
82309
82313
164114
51768
107782
51768
82312
82313
107618
107618
109876
164053
101839 For 460K43 and 460K73
101840 For 460K45 and 460K75
140596
114258
164217

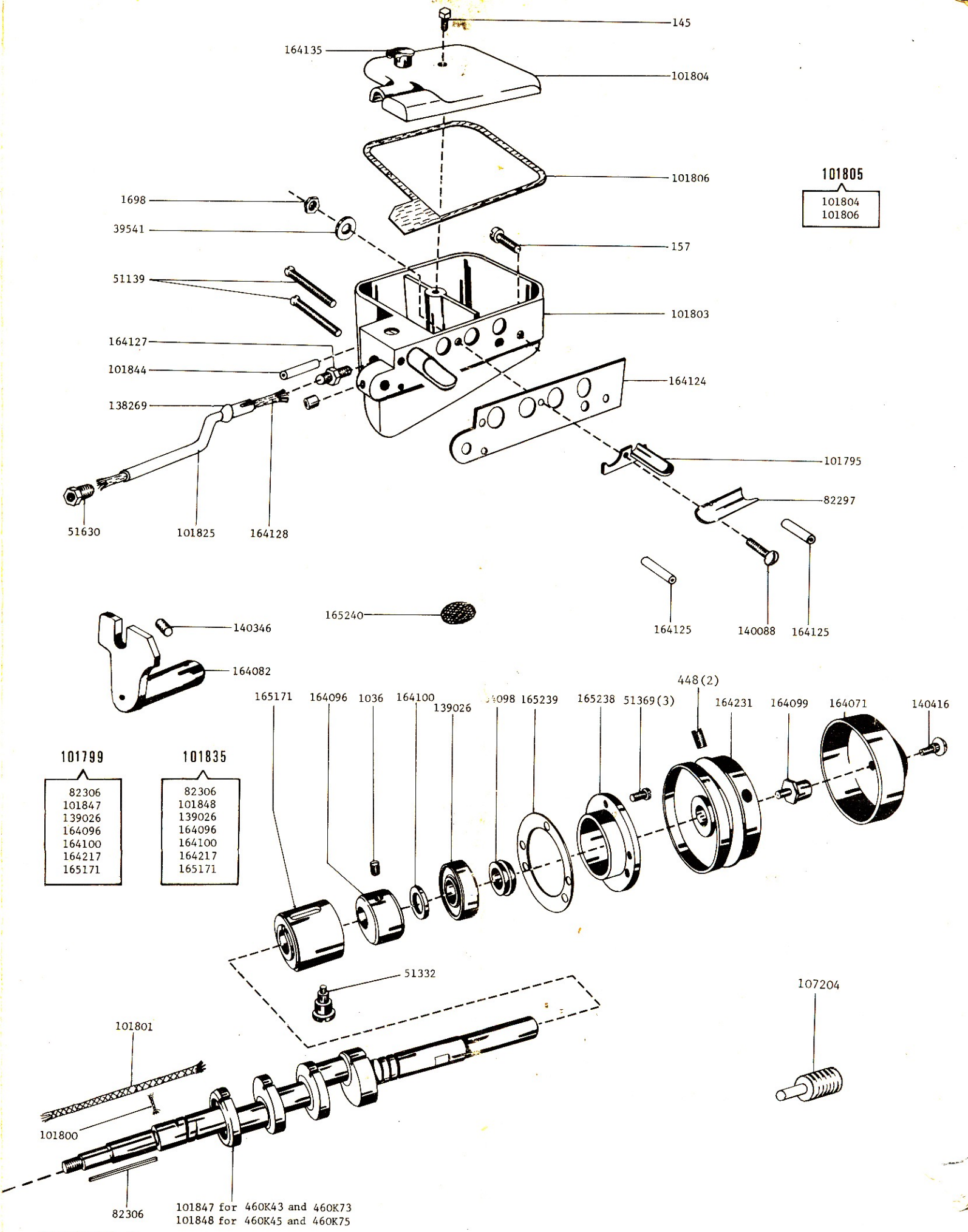
145
164135
101804
101806
101805
101804
101806
1698
39541
157
51139
101803
164127
101844
164124
138269
101795
82297
51630
101825
164128
140088
164125
164125
165240
140346
164082
448(2)
165171
164096
1036
164100
139026
165239
165238
51369(3)
164231
164099
164071
140416
101799
82306
101847
139026
164096
164100
164217
165171
101835
82306
101848
139026
164096
164100
164217
165171
51332
107204
101801
101800
82306
101847 for 460K43 and 460K73
101848 for 460K45 and 460K75

SECTION 3.

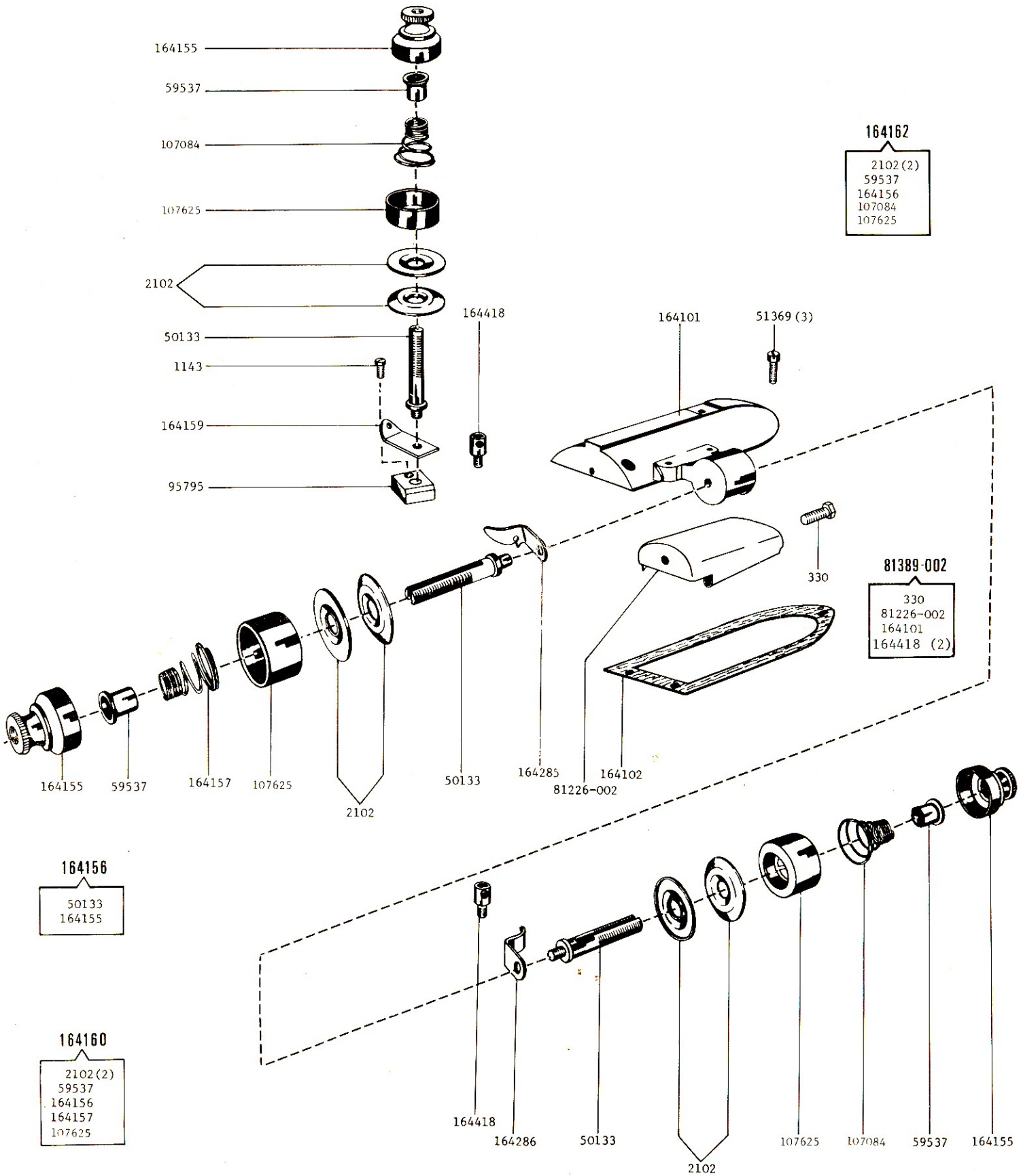
164155
59537
107084
107625
2102
50133
1143
164159
95795
164418
164101
51369 (3)
330
164155
59537
164157
107625
2102
50133
164285
81226-002
164102
164156
50133
164155
164160
2102 (2)
59537
164156
164157
107625
164418
164286
50133
2102
107625
107084
59537
164155
164162
2102 (2)
59537
164156
107084
107625
81389-002
330
81226-002
164101
164418 (2)

SECTION 4.

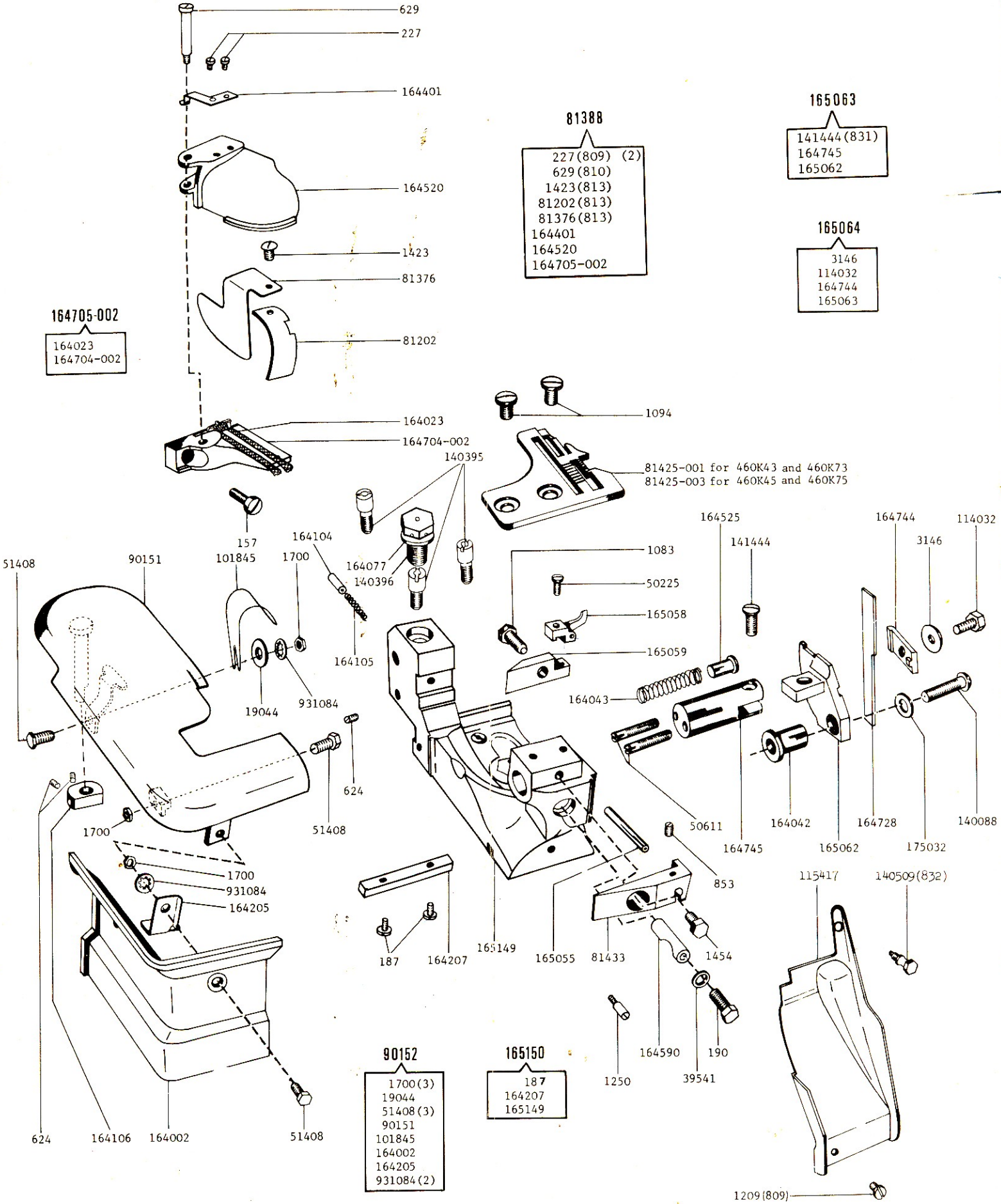
629
227
164401
164520
1423
81376
81202
164705-002
164023
164704-002
81388
227(809) (2)
629(810)
1423(813)
81202(813)
81376(813)
164401
164520
164705-002
165063
141444(831)
164745
165062
165064
3146
114032
164744
165063
164023
164704-002
140395
1094
81425-001 for 460K43 and 460K73
81425-003 for 460K45 and 460K75
157
164104
164077
140396
1083
50225
165058
165059
164525
141444
164744
3146
114032
51408
90151
101845
1700
164105
19044
931084
164043
624
51408
1700
50611
164745
164042
165062
164728
175032
140088
853
1700
931084
164205
187
164207
165149
165055
81433
1454
115417
140509(832)
164590
190
39541
1250
624
164106
164002
51408
90152
1700(3)
19044
51408(3)
90151
101845
164002
164205
931084(2)
165150
187
164207
165149
1209(809)

SECTION 5.

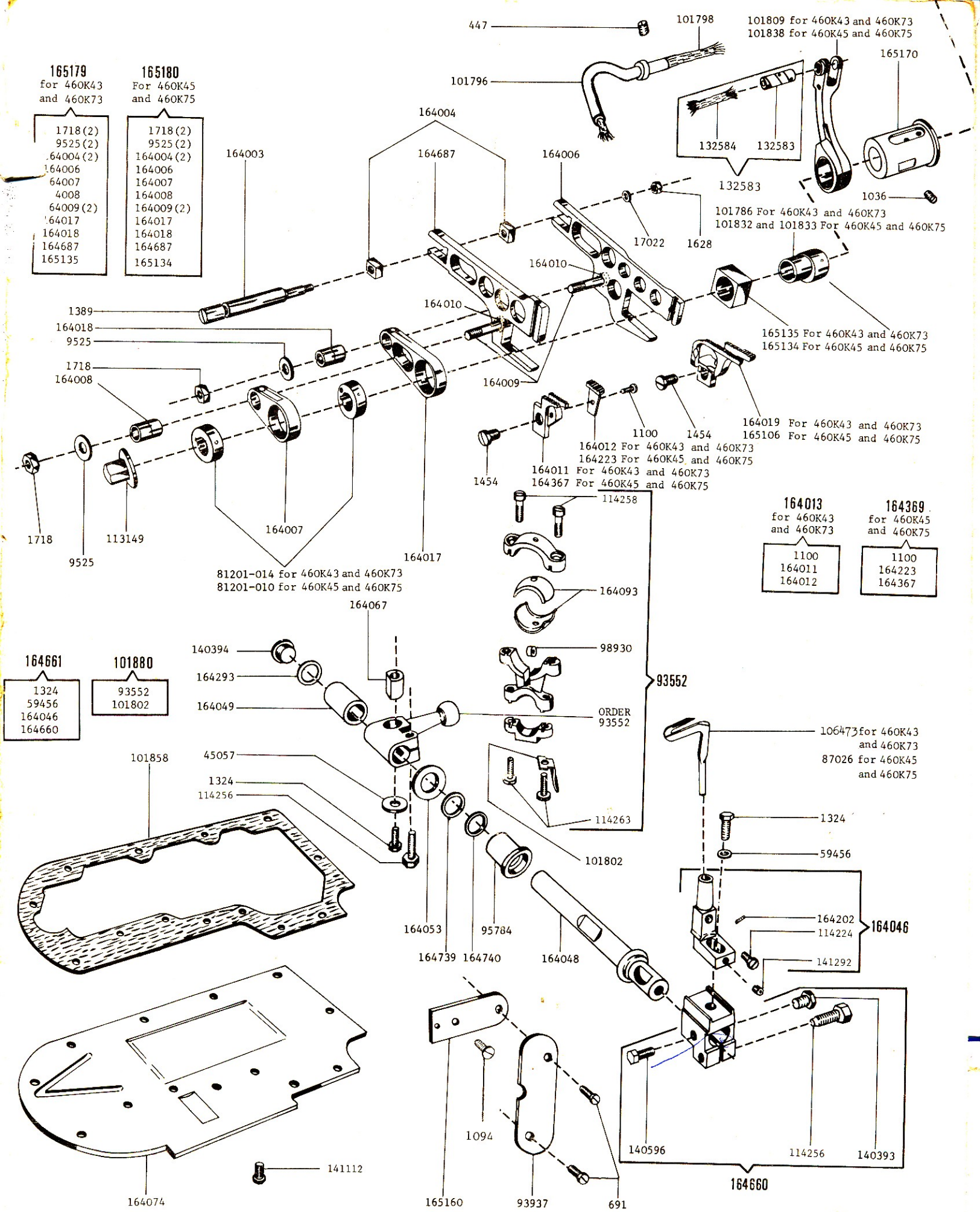
447
101798
101809 for 460K43 and 460K73
101838 for 460K45 and 460K75
165170
101796
165179
for 460K43
and 460K73
1718(2)
9525(2)
164004(2)
164006
64007
4008
64009(2)
164017
164018
164687
165135
165180
For 460K45
and 460K75
1718(2)
9525(2)
164004(2)
164006
164007
164008
164009(2)
164017
164018
164687
165134
164004
164687
164006
164003
132584
132583
132583
1036
101786 For 460K43 and 460K73
101832 and 101833 For 460K45 and 460K75
17022
1628
164010
1389
164018
9525
1718
164008
164010
165135 For 460K43 and 460K73
165134 For 460K45 and 460K75
164009
1100
1454
164019 For 460K43 and 460K73
165106 For 460K45 and 460K75
164012 For 460K43 and 460K73
164223 For 460K45 and 460K75
164011 For 460K43 and 460K73
164367 For 460K45 and 460K75
1454
114258
164013
for 460K43
and 460K73
1100
164011
164012
164369
for 460K45
and 460K75
1100
164223
164367
1718
9525
113149
164007
164017
81201-014 for 460K43 and 460K73
81201-010 for 460K45 and 460K75
164093
164067
140394
98930
164661
1324
59456
164046
164660
101880
93552
101802
164293
93552
164049
ORDER
93552
106473 for 460K43
and 460K73
87026 for 460K45
and 460K75
101858
45057
1324
114256
114263
1324
101802
59456
164053
95784
164202
114224
164046
164739
164740
164048
141292
1094
140596
114256
140393
141112
164074
165160
93937
691
164660

SECTION 6.

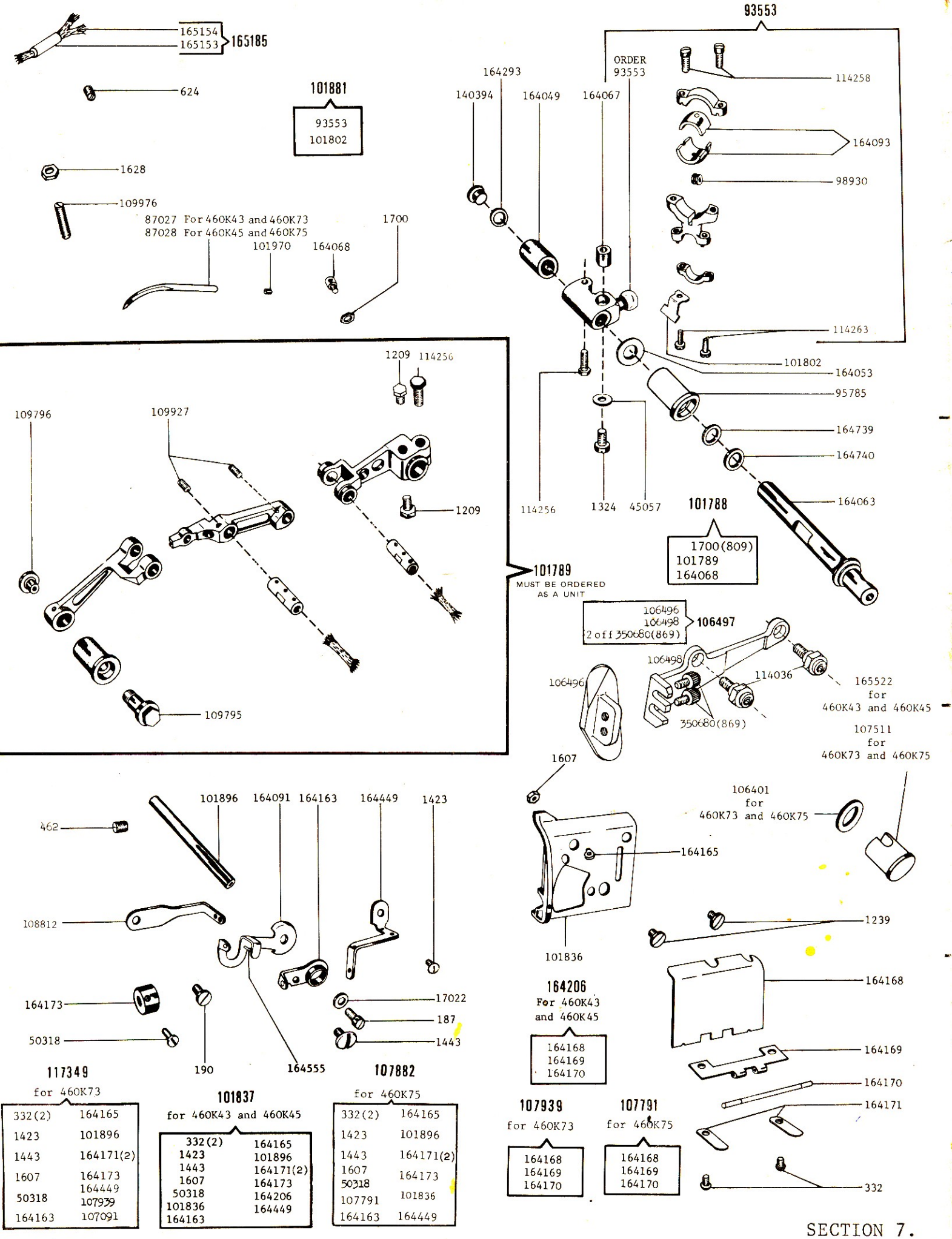
165154
165153
165185
624
101881
93553
101802
1628
109976
87027 For 460K43 and 460K73
87028 For 460K45 and 460K75
101970
164068
1700
93553
ORDER 93553
164293
140394
164049
164067
114258
164093
98930
114263
101802
164053
95785
164739
164740
164063
114256
1324
45057
101788
1700(809)
101789
164068
1209
114256
109796
109927
1209
109795
101789
MUST BE ORDERED AS A UNIT
106496
106498
2 off 350680(869)
106497
106498
106496
114036
165522 for 460K43 and 460K45
350680(869)
107511 for 460K73 and 460K75
1607
106401 for 460K73 and 460K75
164165
101836
1239
164168
164206 For 460K43 and 460K45
164168
164169
164170
164169
164170
164171
332
462
101896
164091
164163
164449
1423
108812
164173
50318
190
164555
17022
187
1443
117349 for 460K73
332(2) 164165
1423 101896
1443 164171(2)
1607 164173
50318 164449
164163 107939
107091
101837 for 460K43 and 460K45
332(2) 164165
1423 101896
1443 164171(2)
1607 164173
50318 164206
101836 164449
164163
107882 for 460K75
332(2) 164165
1423 101896
1443 164171(2)
1607 164173
50318 101836
107791
164163 164449
107939 for 460K73
164168
164169
164170
107791 for 460K75
164168
164169
164170

NUMERICAL LIST OF PARTS FOR SECTION 1.

Part No.	Description
185(809)	Machine Frame Oil Splash Guard (internal) Screw (bottom)
197(809)	Machine Frame Bracket Oil Screen Screw
462(830)	Presser Bar Lifting Bracket Set Screw (short)
624(830)	Presser Bar Lifting Bracket Set Screw (long)
665(809)	Chain Cutter Knife Screw
1443(809)	Machine Frame Oil Splash Guard (internal) Screw (top)
1443(809)	Thread (needle) Controller Screw
1637(810)	Presser Bar Lifting Bracket Stop Screw Nut
1700(809)	Presser Bar (swing-out) Lifting Screw Stud Nut
42436	Presser Bar (swing-out) Opening Lever Hinge Screw Washer
50169(809)	Presser Foot Guide Screw
50225(809)	Presser Foot Clamping Plate Screw
51306(805)	Presser Foot Chain Knife Screw for 460K43 and 460K73
51362(830)	Presser Bar (swing-out) Pivot Screw Locking Plate Screw
51846	Presser Bar Lifting Bracket Roller and Stud
82305	Machine Frame Bracket and Cover (back) Gasket (rubber) for 460K43 and 460K45
82330(850)	Presser Bar (swing-out)
82462	Machine Frame Bracket Oil Screen Screw Washer
82462	Machine Frame Oil Splash Guard (internal) Screw (bottom) Washer
101828	Thread (needle) Controller for 460K43 and 460K45
101829	Oil Deflector
101830	Needle Driving Shaft Oil Shield
101927	Machine Frame Oil Splash Guard (internal) complete with 106156 and 165157
101928	Machine Frame Bracket Oil Screen
101962	Lint Guard
106144	Presser Bar Lifting Bracket with 462(830), 624(830) and 51846 for 460K73 and 460K75
106148	Machine Frame Cover (back) for 460K73 and 460K75
106258	Machine Frame Cover (back) 106148 with 1637(809) and 109898(803) for 460K73 and 460K75
107081(809)	Presser Bar (swing-out) Opening Lever
109898(832)	Presser Bar Lifting Lever Stop Screw
114082	Presser Bar (swing-out) Opening Lever Hinge Screw
114256(809)	Machine Frame Cover (back) Screw (long) 2 for 460K43 and 460K45, 3 for 460K73 and 460K75
114275	Pressure Regulating Thumb Screw
140510(803)	Presser Bar (swing-out) Pivot Screw
164137	Presser Bar Lifting Bracket with 462(830), 624(830) and 51846 for 460K43 and 460K45
164138(809)	Presser Bar Lifting Lever for 460K43 and 460K73
164139	Presser Bar Lifting Lever Spring
164141	Presser Bar (swing-out) Lifting Screw Stud
164143(850)	Presser Bar (upright)
164144	Presser Bar (upright) Spring (heavy) (alternative to 164416)
164145	Presser Foot Body for 460K43 and 460K73
164146	Presser Foot Chaining-off Finger for 460K43 and 460K73
164147	Presser Foot Clamping Plate
164149	Presser Foot Guide for 460K43 and 460K73
164150	Presser Foot with Chain Cutter complete, Nos. 50169(809), 50225(809), 51306(805), 164145, 164146, 164147, 164149, 164220 and 164221 for 460K43 and 460K73
164220	Presser Foot Chain Cutter Friction Plate for 460K43 and 460K73
164221	Presser Foot Chain Knife for 460K43 and 460K73
164351(809)	Presser Bar (swing-out) Pivot Screw Locking Plate
164360	Presser Foot Guide for 460K45 and 460K75
164378	Presser Foot Body for 460K45 and 460K75
164379	Presser Foot Chaining-off Finger for 460K45 and 460K75
164380	Presser Foot with Chain Cutter complete, Nos. 50169(809), 50225(809), 164147, 164360, 164378 and 164379 for 460K45 and 460K75
164416	Presser Bar (upright) Spring (heavy)
164515-002	Machine Frame Cover (back) for 460K43 and 460K45
164516-002	Machine Frame Cover (back) 164515-002 with 1637(809) and 109898(803) for 460K43 and 460K45
164814	Presser Bar (upright) Spring (extra heavy) (alternative to 164416) (used with 164815)
164815	Presser Bar (upright) Spring Spacing Collar (alternative to 164416) (used with 164814)
164860	Chain Cutter Holder
164861	Chain Cutter Knife
164862	Chain Cutter complete, Nos. 665(809), 164860 and 164861 (only supplied if specified on order and at an extra charge)
164884	Presser Bar Lifting Lever for 460K45 and 460K75
165156	Machine Frame Oil Splash Guard (internal) Oil Wick
165157	Machine Frame Oil Splash Guard (internal) Oil Wick Fastener

NUMERICAL LIST OF PARTS FOR SECTION 2.

Part No.	Description
198(809)	Knife (movable) Holder Screw
399(806)	Thread (needle) Controller Screw for 460K73 and 460K75
447(830)	Knife (movable) Lever Bearing Set Screw (long)
447(830)	Knife (movable) Lever Guide Holder Thread Tube Set Screw (Machine Frame End)
447(830)	Knife (movable) Lever Hinge Stud Set Screw (back)
460(830)	Knife (movable) Lever Guide Thread Tube Set Screw
460(830)	Thread Eyelet (needle thread) Set Screw
624(830)	Knife (movable) Lever Bearing Set Screw (short)
1083(803)	Needle Driving Shaft Crank Clamping Screw
1143(830)	Knife (movable) Lever Hinge Stud Set Screw (top)
1231(818)	Machine Frame Oil Splash Guard (top) Screw
1259	Knife (movable) Lever Bearing and Attachment Bracket Screw
1423	Knife (movable) Lever Guide and Needle Thread Bridge Bracket Screw
1423	Knife (movable) Lever Guide and Needle Thread Bridge Eyelet Screw
50073(809)	Knife (movable) Lever Cover and Presser Bar (upright) Housing Screw
50318	Knife (movable) Hinged Cover Screw
51768(803)	Needle Clamping Nut
82256	Knife (movable) Hinged Cover Hinge
82257	Knife (movable) Hinged Cover Pin
82259	Knife (movable) Hinged Cover Spring
82264	Knife (movable) for 460K45 and 460K75
82271	Presser Bar Bracket
82274	Knife (movable) Lever Cover and Presser Bar (upright) Housing with 460(830) for 460K43 and 460K45
82275	Knife (movable) Lever Cover and Presser Bar (upright) Housing complete, Nos. 50060(810), 82259, 82274, 82281, 93929, 164137, 164138, 164139, 164142(809) for 460K43
82276	Knife (movable) Lever Cover and Presser Bar (upright) Housing complete, Nos. 50060(810), 82259, 82274, 82281, 93959, 164137, 164139, 164142, 164143, 164194, 164884 and two 50318 for 460K45
82281	Thread Eyelet (needle thread)
82299	Machine Frame Oil Splash Guard (top)
82309	Needle Stop Pin for 460K73 and 460K75
82311	Needle Driving Shaft Bushing Cap
82312	Needle Holder for 460K73 and 460K75
82313	Needle Holder Washer for 460K73 and 460K75
82337	Knife (movable) Lever Guide
82338	Knife (movable) Lever Guide and Needle Thread Bridge Bracket
82339	Knife (movable) Lever Guide and Needle Thread Bridge Eyelet
82340	Knife (movable) Lever Guide 82337 with 460(830), 82338, 82339, 164182 and two 1423
87029	Knife (movable) Lever Bearing and Attachment Bracket
87262	Knife (movable) Lever Bearing and Attachment Bracket 87029 with 1259

Part No.	Description
93928	Knife (movable) Hinged Cover
93929	Knife (movable) Hinge Cover 93928 with 82256 and 82257
101839	Needle Driving Shaft Bushing for 460K43 and 460K73
101840	Needle Driving Shaft Bushing for 460K45 and 460K75
101850	Knife (movable) Lever 165356 with 107161 101809, 132583 and 164035 for 460K43 and 460K73
101851	Knife (movable) Lever 165356 with 107161 101838, 132583 and 164035 for 460K45 and 460K75
106132	Knife (movable) Holder for 460K73 and 460K75
106145	Knife (movable) Lever Cover and Presser Bar (upright) Housing with 460(830) for 460K73 and 460K75
106146	Knife (movable) Lever Cover and Presser Bar (upright) Housing complete, Nos. 50060(810), 82259, 82281, 93929, 106144, 106145, 164138, 164139, 164142(809), 164143, 164194, 164416 and two 50318(809) for 460K73
106147	Knife (movable) Lever Cover and Presser Bar (upright) Housing complete, Nos. 50060(810), 82259, 82281, 93929, 106144, 106145, 164139, 164142, 164143, 164194, 164884 and two 50318(809) for 460K75
107618	Needle Driving Shaft with 82309
107620	Thread (needle) Controller for 460K73
107636	Thread (needle) Controller for 460K75
107782	Needle Driving Shaft 107618 with 51768(803), 82312 and 82313
109876	Needle Driving Shaft Bushing Locating Screw
109927(869)	Knife (movable) Lever Hinge Pin Set Screw
109935(830)	Lint Stripper Set Screw
114256-451	Needle Driving Shaft Crank Connection Clamp Screw
114258-451	Needle Driving Shaft Crank Connection Cap (lower) Screw
114263-451	Needle Driving Shaft Crank Connection Cap (upper) Screw
140050(803)	Knife (movable) Clamp Screw
140159(830)	Needle Driving Shaft Crank Connection Cap (lower) Screw
140596(830)	Needle Driving Shaft Crank Set Screw for 460K43 and 460K45
164027(809)	Knife (movable) Clamp
164029-003	Knife (movable) Holder for 460K43 and 460K45
164030	Knife (movable) Holder Screw Bearing
164034	Knife (movable) Lever Hinge Stud
164035	Knife (movable) Lever Hinge Stud 164034 with 164036 and 164269
164036	Knife (movable) Lever Hinge Stud Oil Wick (long)
164053	Looper (right hand) Driving Shaft Crank Thrust Washer
164114	Needle Driving Shaft Crank Connection with 114256-451
164115	Needle Driving Shaft Crank Ball
164217	Needle Driving Shaft Crank Connection with 114256-451, 164114, 164115, two each 114263-451 and 140596(830)
164182	Knife (movable) Lever Guide Thread Tube
164269	Knife (movable) Lever Hinge Stud Oil Wick (short)
164462(809)	Lint Stripper with 109935(830)
164550	Knife (movable) for 460K43 and 460K73
165291	Knife (movable) Guard (lower)
165356	Knife (movable) Lever with 109927(869)
165487	Knife (movable) Guard (upper)

NUMERICAL LIST OF PARTS FOR SECTION 3.

Part No.	Description
145(809)	Oil Cooler Cover Screw
157(803)	Oil Cooler Screw (short)
448(830)	Machine Pulley Set Screw
1036(830)	Machine Frame Rotary Shaft Counterbalance Set Screw
1698(809)	Machine Frame Oil Lead Screw Nut
39541	Machine Frame Oil Lead Screw Washer
51139(809)	Oil Cooler Screw (long)
51332(803)	Machine Frame Rotary Shaft Bushing (intermediate) Set Screw
51369(803)	Machine Frame Rotary Shaft Ball Bearing Housing Screw
51630	Oil Cooler Oil Tube Lock Nut
82297	Machine Frame Oil Lead
82306	Machine Frame Rotary Shaft Key
101795	Machine Frame Oil Lead Tube Support
101799	Machine Frame Rotary Shaft with 82306, 101847, 139026, 164096, 164100, 164217 and 165171 for 460K43 and 460K73
101800	Machine Frame Rotary Shaft Cross Wick
101801	Machine Frame Rotary Shaft Oil Wick (long)
101803	Oil Cooler complete with two 164125
101804	Oil Cooler Cover with 164135
101805	Oil Cooler Cover 101804 with 101806
101806	Oil Cooler Cover Gasket
101825	Oil Cooler Oil Tube with 138269 and wick
101835	Machine Rotary Shaft with 82306, 101848, 139026, 164096, 164100, 164217 and 165171 for 460K45 and 460K75
101844	Knife (movable) Lever Hinge Stud Oil Wick (long) Protection Sleeve
101847	Machine Frame Rotary Shaft with 101800 and 101801 (for agents only) for 460K43 and 460K73
101848	Machine Frame Rotary Shaft with 101800 and 101801 (for agents only) for 460K45 and 460K75
107204	Machine Frame Oil Drain Plug
138269	Oil Cooler Oil Tube Sleeve
139026	Machine Frame Rotary Shaft Ball Bearing
140088(813)	Machine Frame Oil Lead Screw
140346(830)	Machine Frame Oil Plug Bracket Set Screw
140416(841)	Machine Pulley Cap Screw
164071	Machine Pulley Cap
164082	Machine Frame Oil Plug Bracket
164096	Machine Frame Rotary Shaft Counterbalance with 1036(830)
164098	Machine Frame Rotary Shaft Oil Return and Ball Bearing Grease Retainer
164099	Machine Frame Rotary Shaft Screw Stud
164100	Machine Frame Rotary Shaft Thrust Bearing
164124	Oil Cooler Gasket
164125	Oil Cooler Oil Pipe
164127	Oil Cooler Oil Tube Coupling
164128	Oil Cooler Oil Tube Wick with Threading Wire
164135	Oil Cup for filling machine
164231	Machine Pulley with two 448(830)
165171	Machine Frame Rotary Shaft Bushing (intermediate)
165238	Machine Frame Rotary Shaft Ball Bearing Housing
165239	Machine Frame Rotary Shaft Ball Bearing Housing Gasket
165240	Machine Frame Rotary Shaft Bushing (intermediate) Oil Screen

NUMERICAL LIST OF PARTS FOR SECTION 4.

Part No.	Description
330(809)	Machine Frame Top Cover Oil Lead Screw
1143(830)	Tension (needle) Thread Guide Block Screw
2102	Tension Disc
50133(803)	Tension Screw Stud
51369(809)	Machine Frame Top Cover Screw
59537	Tension Spring Bushing
81226-002	Machine Frame Top Cover Oil Lead
81389-002	Machine Frame Top Cover 164101 with 330(809), 81226-002 and two 164418(809)
95795(809)	Tension (needle) Thread Guide Block
107084	Tension (heavy) Spring
107625	Tension Spring Cover
164101	Machine Frame Top Cover
164102	Machine Frame Top Cover Gasket
164155(809)	Tension Regulating Thumb Nut
164156	Tension Screw Stud 50133(803) with 164155(809)
164157	Tension (light) Spring
164159(809)	Tension (needle thread) Thread Guide
164160	Tension (light) complete, Nos. 59537, 164156, 164157, 107625 and two 2102
164162	Tension (heavy) complete nos. 59537 107084, 107625, 164156 and two 2102
164285(809)	Tension (looper thread) Thread Guide (left)
164286(809)	Tension (looper thread) Thread Guide (right)
164418(809)	Tension Thread Eyelet

NUMERICAL LIST OF PARTS FOR ACCESSORIES

Part No.	Description
356(803)	Knee Lifter Rock Shaft Knee Arm Hub Set Screw
356(803)	Knee Lifter Rock Shaft Knee Plate Set Screw
356(803)	Knee Lifter Rock Shaft Stop Dog Set Screw
2763	Knee Lifter Rock Shaft
2767	Knee Lifter Rock Shaft Knee Plate with 356(803)
2770	Knee Lifter Rock Shaft Stop Dog with 356(803)
4879	Foot Lifter Chain Connecting Link
4881	Foot Lifter Treadle
4882	Foot Lifter Treadle Shaft
4884	Foot Lifter Treadle Stand
4885	Treadle complete, Nos. 4879, 4881 to 4884 and two wood screws 1" No. 16 F.H. (only supplied if specified on order at no extra charge)
6337	Knee Lifter Rock Shaft Lifting Bracket with two 140219(803)
6439	Foot Lifter Chain with 56864 and 56865
12242	Knee Lifter Rock Shaft Hanger with two wood screws 1" No. 10
51326(809)	Belt Guard Screw
56864	Foot Lifter Chain Hook (large)
56865	Foot Lifter Chain Hook (small)
56865	Knee Lifter Chain Hook (small)
59324	Knee Lifter Chain (8" long) with 56865
81350-011	Tin of Oil (1 pint, type H)
81440	Key for 1/16" Allen Head Screws
81443	Thread Unwinder (3 spools)
82253	Gauge (supplied at an extra charge)
82264	Knife (movable) for 460K45 and 460K75
93903	Belt Guard
93904	Belt Guard complete, Nos. 93903, two each 51326(809), 164200 and wood screws 3/4" No. 7 F.H.
101831	Machine Base with two each wood screws sizes 3/4" No. 8 R.H. and 1¼" No. 6 F.H.
140219(803)	Knee Lifter Rock Shaft Lifting Bracket Hook Set Screw
140219(803)	Knee Lifter Rock Shaft Lifting Bracket Set Screw
141253(830)	Knee Lifter Rock Shaft Knee Arm Hub Clamping Screw
143283	Knee Lifter Rock Shaft Knee Arm
147489	Knee Lifter Rock Shaft Knee Arm Hub with 356(830) and 141253(830)
161294	Screw Driver
164164	Thread (looper, right hand) Thread Eyelet (movable)
164188	Machine Cushion (large)
164189	Machine Cushion (small)
164196	Threader
164197	Wrench (socket)
164198	Presser Bar Lifting Chain
164200	Belt Guard Bracket (back)
164203	Feed Eccentric Extractor (supplied at an extra charge)
164204	Tweezers
164550	Knife (movable) for 460K43 and 460K73
164727	Knee Lifter complete (supplied in place of Foot Lifter if specified on order)
164728	Knife (stationary)
164729	Knee Lifter Rock Shaft Lifting Bracket Hook
165253	Gauge (available at an extra charge)
168198	Chip Chute (supplied only when specified on order for all territories except U.S.A. and Canada at no extra charge. Regularly supplied for U.S.A. and Canada at no extra charge).

NUMERICAL LIST OF PARTS FOR SECTION 5.

Part No.	Description
157(803)	Feed Eccentric Cover Bracket Screw
187(805)	Machine Frame Bracket Key Screw
190(805)	Knife (stationary) and Needle Guard Holder Adjusting Stud Cap Screw
227(809)	Feed Eccentric Cover Latch Spring Screw
624(830)	Cloth Plate Plunger Set Screw
624(830)	Cloth Plate Position Collar Set Screw
629(810)	Feed Eccentric Cover Hinge Screw
853(830)	Looper (left hand) Thread Tube Set Screw
1083(805)	Needle Guard Holder Screw
1094(806)	Throat Plate Screw
1209(809)	Chip Guard Screw (lower)
1250(830)	Cloth Plate Lock Spring Retaining Screw Stud
1423(813)	Feed Eccentric Cover Bracket Oil Cover Screw
1454(805)	Throat Plate Guide Screw
1700(809)	Cloth Plate Extension Screw Nut
1700(809)	Cloth Plate Lock Spring Nut
1700(809)	Cloth Plate Position Screw Nut
3146	Knife (stationary) Clamping Gib Screw Washer
19044	Feed Eccentric Cover Closing Spring Washer
39541	Knife (stationary) and Needle Guard Holder Adjusting Stud Cap Screw Washer
50225(809)	Needle Guard Screw
50611(803)	Knife (stationary) and Needle Guard Holder Position Screw
51408(830)	Cloth Plate Extension Screw
51408(830)	Cloth Plate Lock Spring Screw
51408(830)	Cloth Plate Position Screw
81202(813)	Feed Eccentric Cover Bracket Oil Cover
81376(813)	Feed Eccentric Cover Bracket Splash Guard
81388	Feed Eccentric Cover complete, Nos. 629(810), 1423(813), 81202(813), 81376(813), 164401, 164520, 164705-002 and two 227(809)
81425-001	Throat Plate for 460K43 and 460K73
81425-003	Throat Plate for 460K45 and 460K75
81433	Throat Plate Guide with 853(830)
90151	Cloth Plate
90152	Cloth Plate with Extension complete, Nos. 19044, 90151, 101845, 164002, 164205, two 931084(809), three each 1700(809) and 51408(830)
101845	Feed Eccentric Cover Closing Spring
114032(803)	Knife (stationary) Clamping Gib Screw
115417	Chip Guard
140088(805)	Knife (stationary) and Needle Guard Holder Sleeve Screw
140395(805)	Machine Frame Bracket Screw (small)
140396(805)	Machine Frame Bracket Screw (large)
140509(832)	Chip Guard Screw (upper)
141444(831)	Knife (stationary) and Needle Guard Holder Screw
164002	Cloth Plate Extension
164023	Feed Eccentric Oil Wick
164042	Knife (stationary) and Needle Guard Holder Sleeve
164043	Knife (stationary) and Needle Guard Holder Spring

Part No.	Description
164077	Machine Frame Bracket Screw (large) Washer (fibre)
164104	Cloth Plate Plunger
164105	Cloth Plate Plunger Spring
164106	Cloth Plate Position Collar with two 624(830)
164205	Cloth Plate Lock Spring
164207	Machine Frame Bracket Key
164401	Feed Eccentric Cover Latch Spring
164520	Feed Eccentric Cover
164525	Knife (stationary) and Needle Guard Holder Spring Stud
164590	Knife (stationary) and Needle Guard Holder Adjusting Stud
164704-002	Feed Eccentric Cover Bracket
164705-002	Feed Eccentric Cover Bracket 164704-002 with 164023
164728	Knife (stationary)
164744	Knife (stationary) Clamping Gib
164745	Knife (stationary) and Needle Guard Holder Body with two 50611(803)
165055	Looper (left hand) Thread Tube
165058	Needle Guard
165059(813)	Needle Guard Holder
165062	Knife (stationary) and Needle Guard Holder
165063	Knife (stationary) and Needle Guard Holder (adjustable) complete, Nos. 141444(831), 164745 and 165062
165064	Knife (stationary) and Needle Guard Holder (adjustable) with Gib complete, Nos. 3146, 114032(803), 164744 and 165063
165149	Machine Frame Bracket
165150	Machine Frame Bracket Assembly, Nos. 164207, 165149 and two 187(805) (for agents only)
175032	Knife (stationary) and Needle Guard Holder Sleeve Screw Washer
931084(809)	Cloth Plate Extension Screw Nut Lock Washer
931084(809)	Cloth Plate Lock Spring Nut Lock Washer

NUMERICAL LIST OF PARTS FOR SECTION 6.

Part No.	Description
447(830)	Machine Frame Oil Tube (bent) Set Screw
691(803)	Machine Frame Wearing Plate Screw
1036(830)	Machine Frame Rotary Shaft Bushing (front) Set Screw Crank Clamping Screw
1094(803)	Machine Frame Wearing Plate Spacer Screw
1100(830)	Feed (back) Dog Section (right) Screw
1324(803)	Looper (left hand) Carrier Screw
1324(803)	Looper (left hand) Driving Shaft Crank Key Screw
1389(830)	Feed Bar Hinge Pin Set Screw
1454(806)	Feed (back) Dog Screw
1454(806)	Feed (front) Dog Screw
1628(803)	Feed Bar Slide Block (back) Nut
1718(803)	Feed (back) Bar Connection Hinge Screw Stud Nut
1718(803)	Feed (front) Bar Connection Hinge Screw Stud Nut
9525(803)	Feed (back) Bar Connection Hinge Screw Stud Nut Washer
9525(803)	Feed (front) Bar Connection Hinge Screw Stud Nut Washer
17022	Feed Bar Slide Block (back) Nut Washer
45057	Looper (left hand) Driving Shaft Crank Key Screw Washer
59456	Looper (left hand) Carrier Screw Washer
81201-010	Feed (back) Eccentric (10 stitches per inch) (for 460K45 and 460K75)
81201-010	Feed (front) Eccentric (10 stitches per inch)(for 460K45 and 460K75)
81201-014	Feed (back) Eccentric (14 stitches per inch)(for 460K43 and 460K73)
81201-014	Feed (front) Eccentric (14 stitches per inch)(for 460K43 and 460K73)
87026	Looper (left hand) (for 460K45 and 460K75)
93552	Looper (left hand) Driving Shaft Crank Connection with 98930, two each 109925(830), 140159(830) and 164093
93937	Machine Frame Wearing Plate
95784	Looper (left hand) Driving Shaft Bushing (front)
98930	Machine Frame Rotary Shaft Ball Sleeve Guide
101786	Feed Lifting and Knife (movable) Eccentric (for 460K43 and 460K73)
101796	Machine Frame Oil Tube (bent) with Wick
101798	Machine Frame Oil Tube (bent) Wick with Threading Wire (for agents only)
101802	Oil Agitator
101809	Thread (needle) Controller Lever for 460K43 and 460K73
101832	Feed Lifting Eccentric for 460K45 and 460K75
101833	Knife (movable) Eccentric for 460K45 and 460K75
101838	Thread (needle) Controller Lever for 460K45 and 460K75
101858	Machine Frame Bottom Cover Gasket
101880	Looper (left hand) Driving Shaft Crank Connection 93552 with 101802
106473	Looper (left hand) (for 460K43 and 460K73)
114112(830)	Machine Frame Bottom Cover Screw
114256-451	Looper (left hand) Carrier Holder Clamping Screw
114256-451	Looper (left hand) Driving Shaft Crank Clamping Screw
114224(869)	Looper (left hand) Set Screw
114258-451	Looper (right hand) Driving Shaft Crank Connection Cap (upper) Screw
114263-451	Looper (left hand) Driving Shaft Crank Connection Cap (lower) Screw
113149	Machine Frame Rotary Shaft Nut
132583	Knife (movable) Lever Hinge Pin with 132584
132584	Knife (movable) Lever Hinge Pin Oil Wick

Part No.	Description
140393(830)	Looper (left hand) Carrier Holder Set Screw (right)
140394(805)	Looper (left hand) Driving Shaft Bushing (back) Cap Screw
140596(830)	Looper (left hand) Carrier Holder Set Screw (left)
141292(869)	Looper (left hand) Carrier Screw Set Screw
164003	Feed Bar Hinge Pin (eccentric)
164004	Feed Bar Slide Block (back)
164006	Feed (front) Bar with 164010
164007	Feed (back) Bar Connection
164008	Feed (back) Bar Connection Bearing
164009	Feed (back) Bar Connection Hinge Screw Stud
164009	Feed (front) Bar Connection Hinge Screw Stud
164010	Feed (back) Bar Connection Hinge Screw Stud Position Pin
164010	Feed (front) Bar Connection Hinge Screw Stud Position Pin
164011	Feed (back) Dog Section (left) for 460K43 and 460K73
164012	Feed (back) Dog Section (right) for 460K43 and 460K73
164013	Feed (back) Dog, complete, Nos., 1100(830), 164011 and 164012 for 460K43 and 460K73
164017	Feed (front) Bar Connection
164018	Feed (front) Bar Connection Bearing
164019	Feed (front) Dog for 460K43 and 460K73
164046	Looper (left hand) Carrier with 114224(869) 141292(869) and 164202
164048	Looper (left hand) Driving Shaft
164049	Looper (left hand) Driving Shaft Bushing (back)
164053	Looper (left hand) Driving Shaft Crank Thrust Bearing
164067	Looper (left hand) Driving Shaft Crank Key
164074	Machine Frame Bottom Cover
164093	Machine Frame Rotary Shaft Ball Sleeve (two pieces)
164202	Looper (left hand) Stop Pin
164223	Feed (back) Dog Section (right) for 460K45 and 460K75
164293	Looper (left hand) Driving Shaft Bushing (back) Cap Screw Washer
164367	Feed (back) Dog Section (left) for 460K45 and 460K75
164369	Feed (back) Dog complete, Nos., 1100(830), 164223 and 164367 for 460K45 and 460K75
164660	Looper (left hand) Carrier Holder with 114256-451 140393(830) and 140596(830)
164661	Looper (left hand) Carrier Holder 164660 with 1324(803), 59456, and 164046
164687	Feed (back) Bar with 164010
164739	Looper (left hand) Driving Shaft Oil Ring (rubber)
164740	Looper (left hand) Driving Shaft Oil Ring Spacer
165106	Feed (front) Dog for 460K45 and 460K75
165134	Feed Bar Slide Block (front) for 460K45 and 460K75
165135	Feed Bar Slide Block (front) for 460K43 and 460K73
165160	Machine Frame Wearing Plate Spacer
165170	Machine Frame Rotary Shaft Bushing (front)
165179	Feed (back) and (front) Bars complete, Nos. 164006, 164007, 164008, 164017, 164018, 164687, 165135 and two each 1718(803), 9525(803), 164004 and 164009 for 460K43 and 460K73
165180	Feed (back) and (front) Bars complete, Nos. 164006, 164007, 164008, 164017, 164018, 164687, 165134, two each 1718(803), 9525(803), 164004 and 164009 for 460K45 and 460K75

NUMERICAL LIST OF PARTS FOR SECTION 7.

Part No.	Description
187(805)	Thread (looper, right hand) Take-up Screw
190(805)	Thread (looper) Take-up Screw (lower)
332(809)	Thread (looper) Plate Cover Spring Screw
462(830)	Thread (looper, right hand) Tube Set Screw
624(830)	Machine Frame Oil Tube Set Screw
1209(830)	Looper (right hand) Driving Lever Clamping Screw
1239(806)	Thread (looper) Plate Screw
1324(803)	Looper (right hand) Driving Shaft Crank Key Screw
1423(809)	Thread (looper, right hand) Thread Eyelet Screw
1443(809)	Thread (looper, right hand) Take-up Eyelet (adjustable) Screw
1607(809)	Thread (looper, right hand) Thread Eyelet (stationary) Nut
1628(809)	Looper (right hand) Carrier Connecting Link Adjusting Screw (front) Stop Screw Nut
1700(809)	Looper (right hand) Locking Screw Stud Nut
17022	Thread (looper, right hand) Take-up Screw Washer
45057	Looper (right hand) Driving Shaft Crank Key Screw Washer
50318(818)	Thread (looper) Plate Thread Bushing Screw
87027	Looper (right hand) for 460K43 and 460K73
87028	Looper (right hand) for 460K45 and 460K75
93553	Looper (right hand) Driving Shaft Crank Connection with 114256-451 164093, two each 114258-451 and 114263-451
95785	Looper (right hand) Driving Shaft Bushing (front)
98930	Machine Frame Rotary Shaft Ball Sleeve Guide
101788	Looper (right hand) Four-Bar Linkage Mechanism with Driving Lever complete, Nos. 1700(809), 101789 and 164068
101789	Looper (right hand) Four-Bar Linkage complete
101802	Oil Agitator
101837	Thread (looper) Plate complete, nos. 1423(809), 1443(80), 1607(809) 50318(818), 101836, 164163, 164165, 101896, 164173, 164206, 164449, two each 332(809) and 164171 for 460K43 and 460K45
101881	Looper (right hand) Driving Shaft Crank Connection 93553 with 101802
101896	Thread (looper, right hand) Tube
101970	Looper (right hand) Position Collar
106401	Machine Frame Oil Sight Gauge Seal for 460K73 and 460K75
106496	Looper (right hand) Four-Bar Linkage Mechanism Stabiliser
106497	Looper (right hand) Four-Bar Linkage Mechanism Stabiliser 106496 with 106498 and two 350680
106498	Looper (right hand) Four-Bar Linkage Mechanism Stabiliser Support Bracket
107091	Thread (looper) Plate
107511	Machine Frame Oil Sight Gauge for 460K73 and 460K75
107791	Thread (looper) Plate Cover 164168 with 164169 and 164170 for 460K75
107882	Thread (looper) Plate, complete nos. 1423(809), 1443(809), 1607(809), 50318(818), 101836, 107791, 164163, 164165, 101896, 164173, 164449, two each 332(809) and 164171 for 460K75
107939	Thread (looper) Plate Cover 164168 with 164169 and 164170 for 460K73
108812	Thread (looper) Take-up
109795(803)	Looper (right hand) Carrier Connecting Link Adjusting Screw (front)
109796(803)	Looper (right hand) Carrier Connecting Link Adjusting Sleeve Cap Screw (back)
109925(830)	Looper (right hand) Driving Shaft Crank Connection Cap (lower) Screw
109927(869)	Looper (right hand) Carrier Hinge Pin Set Screw
109927(869)	Looper (right hand) Carrier Connecting Link Hinge Pin Set Screw
109976(830)	Looper (right hand) Carrier Connecting Link Adjusting Screw (front) Stop Screw
114036	Looper (right hand) Four-Bar Linkage Mechanism Stabiliser Securing Screw
114256-451	Looper (right hand) Driving Lever Clamping Screw
114256-451	Looper (right hand) Driving Shaft Crank Clamping Screw
114258-451	Looper (right hand) Driving Shaft Crank Connection Cap (upper) Screw
114263-451	Looper (right hand) Driving Shaft Crank Connection Cap (lower) Screw
117349	Thread (looper) Plate complete, nos. 1423(809), 1443(809), 1607(809), 50318(818), 107091, 107939, 164163, 164165, 101896, 164173, 164449, two each 332(809) and 164171 for 460K73
140394(805)	Looper (right hand) Driving Shaft Bushing (back) Cap Screw
164049	Looper (right hand) Driving Shaft Bushing (back)
164053	Looper (right hand) Driving Shaft Crank Thrust Washer
164063	Looper (right hand) Driving Shaft
164067	Looper (right hand) Driving Shaft Crank Key
164068	Looper (right hand) Locking Screw Stud
164091	Thread (looper, right hand) Take-up with 164555
164093	Machine Frame Rotary Shaft Ball Sleeve (two pieces)
164163	Thread (looper, right hand) Take-up Eyelet (adjustable)
164165	Thread (looper, right hand) Thread Eyelet (stationary)
164168	Thread (looper) Plate Cover
164169	Thread (looper) Plate Cover Hinge
164170	Thread (looper) Plate Cover Hinge Pin
164171	Thread (looper) Plate Cover Spring
164173	Thread (looper) Plate Thread Bushing
164206	Thread (looper) Plate Cover 164168 with 164169 and 164170 for 460K43 and 460K45
164293	Looper (right hand) Driving Shaft Bushing (back) Cap Screw Washer (fibre)
164449	Thread (looper, right hand) Thread Eyelet (movable)
164555	Thread (looper, right hand) Take-up Guide Wire
164739	Looper (right hand) Driving Shaft Oil Ring (rubber)
164740	Looper (right hand) Driving Shaft Oil Ring (rubber)
165153	Machine Frame Oil Tube
165154	Machine Frame Oil Tube Wick
165185	Machine Frame Oil Tube Nos. 165153 and 165154
165522	Machine Frame Oil Sight Gauge (lucite) for 460K43 and 460K45
350680	Looper (right hand) Four-Bar Linkage Mechanism Stabiliser Screw