PARTS LIST

SINGER*

14U12

AW - LOJA

* A Trademark of THE SINGER COMPANY
Copyright © 1981 THE SINGER COMPANY
All Rights Reserved Throughout the World

INDEX

1

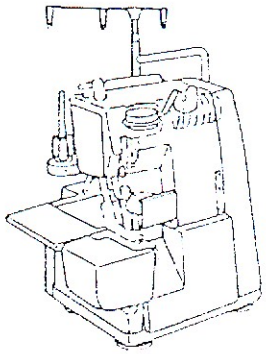

2

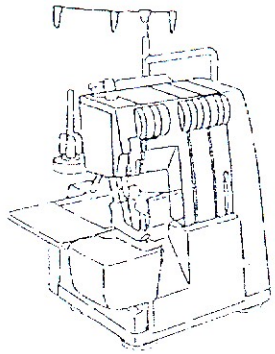

3

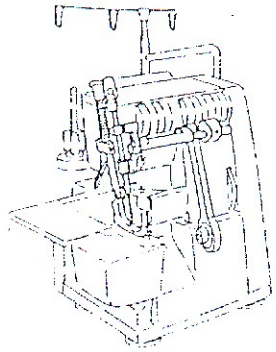

4

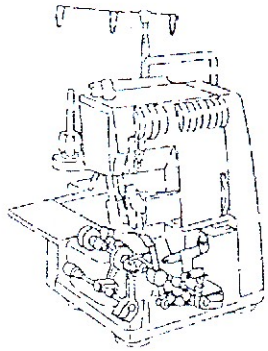

5

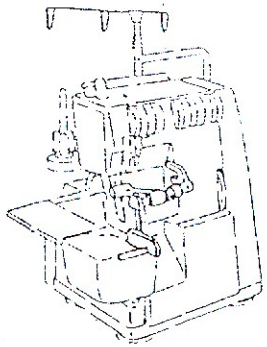

6

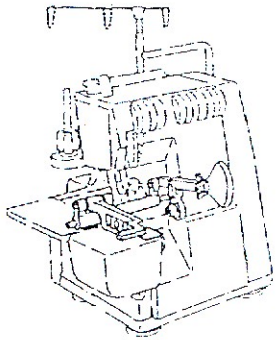

7

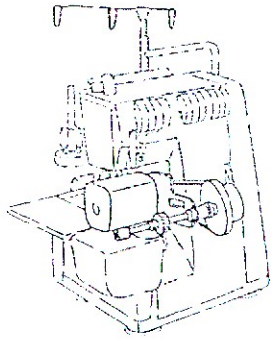

8

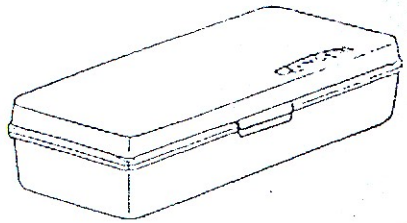

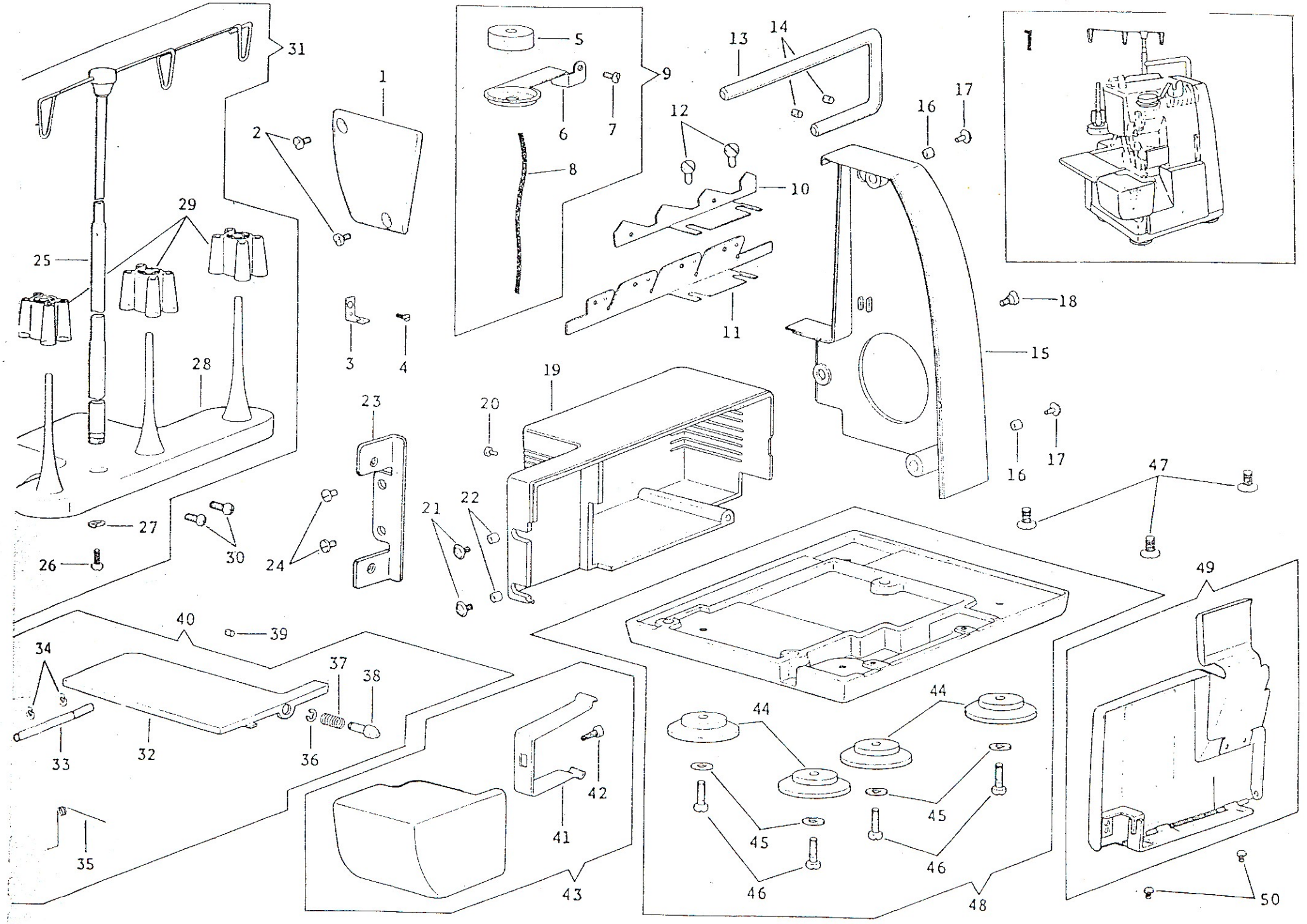
31
1
2
5
9
6
7
8
13
14
12
10
11
16
17
18
15
29
25
28
3
4
19
20
23
21
22
27
26
30
24
47
49
40
39
34
37
38
33
32
36
35
42
41
43
44
45
46
48
50

	PART NO.	DESCRIPTION
1	410241	Face Plate
2	544134-453	Face Plate Screw (2)
3	410210-452	Needle Thread Guide
4	544258	Needle Thread Guide Screw
5	410205	Felt
6	410204	Felt Support
7	544039	Felt Support Set Screw
8	543370	Oil Wick
9	410203	Felt Support
10	410408	Thread Guide Plate Auxiliary Plate
11	410209	Thread Guide Plate
12	544212-001	Thread Guide Plate Set Screw (2)
13	410202	Handle
14	544204-005	Handle Set Screw
15	410250	Pulley Cover
16	408792	Pulley Cover Screw Spacer (2)
17	544270-001	Pulley Cover Screw (2)
18	544271	Pulley Cover Screw Stud (long)
19	410248	Motor Cover
20	544212-001	Motor Cover Screw
21	544270-001	Motor Cover Screw (2)
22	408792	Motor Cover Screw Spacer (2)
23	410468	Motor Cover Mounting Plate
24	544212-001	Motor Cover Mounting Plate Screw
25	410396	Thread Unwinder Thread Guide Rod Comp.
26	544212-003	Thread Unwinder Thread Guide Rod Screw
27	543805-003	Thread Unwinder Thread Guide Rod Screw Washer
28	410389	Thread Unwinder Comp.
29	546893	Spool Holder (3)
30	544213-001	Thread Unwinder Comp. Screw (2)
31	410486	Thread Unwinder Comp.
32	410243	Bed Lid Comp.
33	410246	Bed Lid Stud
34	546623	Bed Lid Stud Retaining Ring (2)
35	410247	Bed Lid Stud Spring
36	546623	Bed Lid Latch Retaining Ring
37	381877	Bed Lid Latch Spring
38	381874-451	Bed Lid Latch
39	544203-001	Bed Lid Stud Screw
40	410242	Bed Lid Comp.
41	410251	Cylinder Cover Spring
42	544222-003	Cylinger Cover Spring Clamping Screw
43	410249	Cylinder Cover Comp.
44	410208	Machine Base Cushion (4)
45	543803-004	Machine Base Cushion Screw Washer (4)
46	544218-001	Machine Base Cushion Screw (4)
47	544214-005	Machine Base Screw (3)
48	410206	Machine Base
49	410235-002	Looper Cover Comp.
50	544212-001	Looper Cover Screw (2)

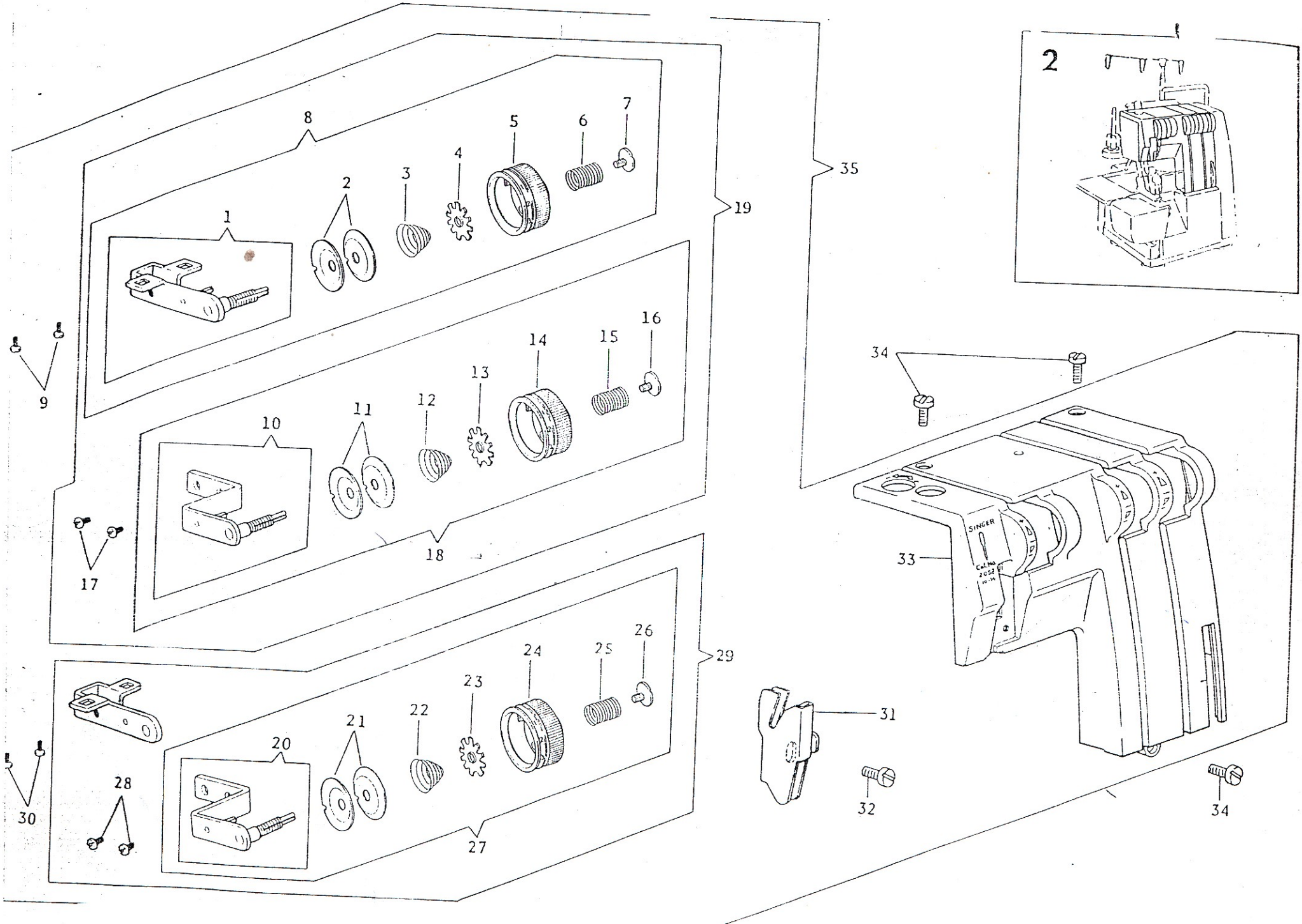
2
8
1
2
3
4
5
6
7
19
35
9
10
11
12
13
14
15
16
17
18
29
20
21
22
23
24
25
26
27
28
30
31
32
33
34
34
SINGER

	PART NO.	DESCRIPTION
1	410220	Tension Dial Bracket (right) Comp.
2	410226	Tension Disc (2)
3	410477	Tension Disc Spring
4	410228	Tension Disc Spring Nut
5	410229	Tension Dial Comp.
6	410230	Tension Dial Presser Spring
7	544265	Tension Dial Presser Spring Screw
8	410468	Tension Dial Comp.
9	544212-001	Tension Dial Comp. Screw (2)
10	410232	Tension Dial Bracket (left) Comp.
11	410226	Tension Disc (2)
12	410477	Tension Disc Spring
13	410228	Tension Disc Spring Nut
14	410229	Tension Dial Comp.
15	410230	Tension Dial Presser Spring
16	544265	Tension Dial Presser Spring Screw
17	544212-001	Tension Dial Bracket (left) Set Screw (2)
18	410488	Tension Dial Bracket (left) Comp.
19	410480	Tension Dial Comp. (D)
20	410232	Tension Dial Bracket (left) Comp.
21	410226	Tension Disc (2)
22	410227	Tension Disc Spring
23	410228	Tension Disc Spring Nut
24	410229	Tension Dial Comp.
25	410230	Tension Dial Presser Spring
26	544265	Tension Dial Presser Spring Screw
27	410231	Tension Dial Bracket (left) Comp.
28	544212-001	Tension Dial Bracket (left) Set Screw (2)
29	410479	Tension Dial Comp. (A)
30	544212-001	Tension Dial Comp. Screw (2)
31	410466	Front Cover Thread Take-up
32	544269	Front Cover Thread Take-up Set Screw
33	410465	Front Cover
34	544134-453	Front Cover Screw (3)
35	410464	Front Cover Comp.

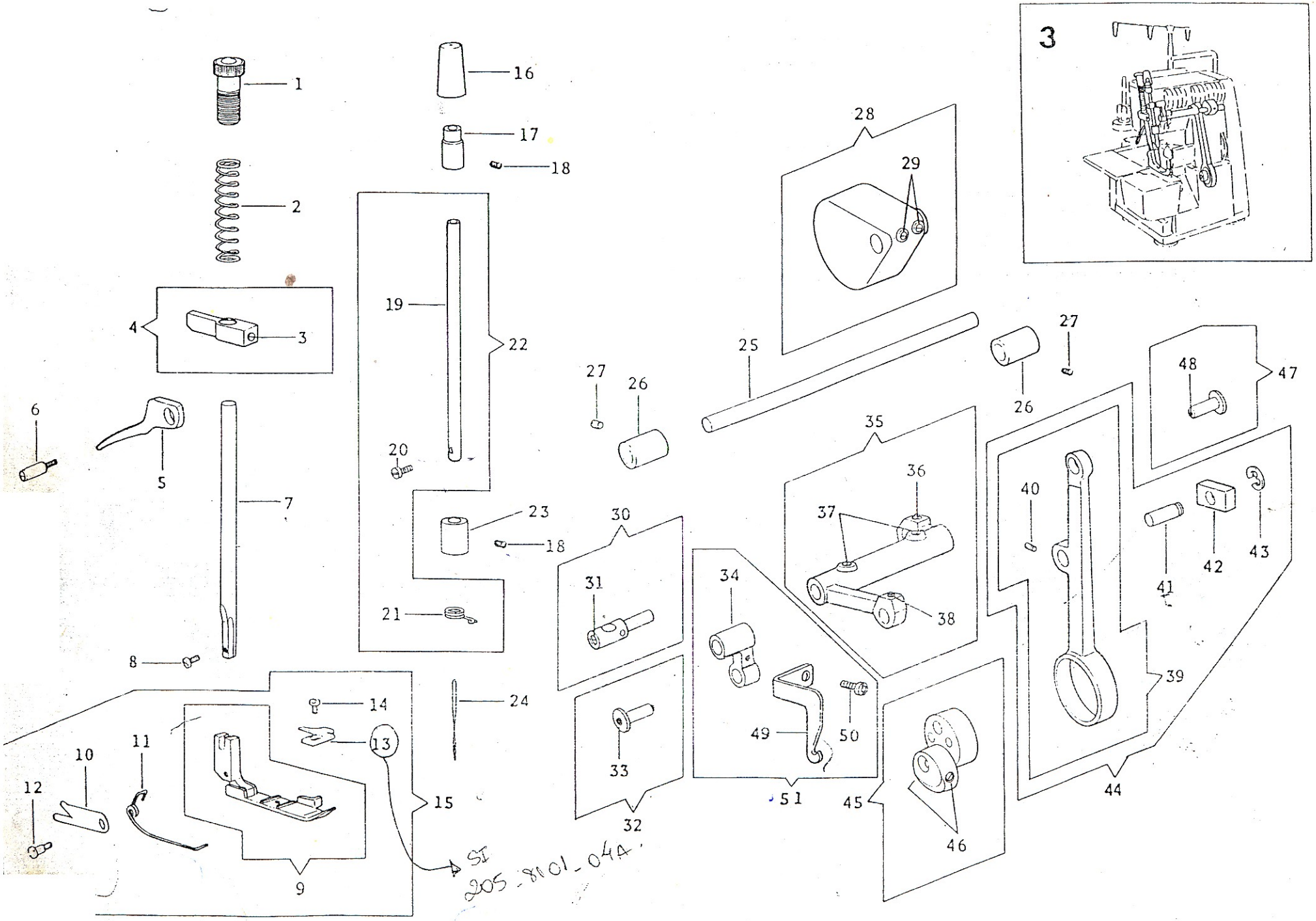
3
1
2
3
4
5
6
7
8
9
10
11
12
13
14
15
16
17
18
19
20
21
22
23
24
25
26
27
28
29
30
31
32
33
34
35
36
37
38
39
40
41
42
43
44
45
46
47
48
49
50
51
SI
205-8101-04A

	PART NO.	DESCRIPTION
1	544262	Presser Regulating Thum Screw
2	410355	Presser Bar Spring
3	544204-001	Presser Bar Guide Bracket Screw
4	410352	Presser Bar Guide Bracket Comp.
5	410354	Presser Bar Lifter
6	544261	Presser Bar Lifter Screw Stud
7	410351	Presser Bar
8	504063-451	Presser Foot Screw
9	410344	Presser Foot Comp.
10	410349	Thread Cutter
11	410348	Presser Foot Spring
12	544264	Presser Foot Screw Stud
13	410458	Presser Foot Chaining-off Finger
14	545180	Presser Foot Chaining-off Finger Screw
15	410457	Presser Foot Comp.
16	410322	Needle Bar Bushing (upper) Cap
17	410323	Needle Bar Bushing (upper)
18	544204-001	Needle Bar Bushing Set Screw (2)
19	410320	Needle Bar
20	549324	Needle Set Screw
21	410321	Needle Bar Thread Guide
22	410319	Needle Bar Comp.
23	410324	Needle Bar Bushing (lower)
24	N2053-010	Needle
25	410333	Arm Shaft
26	410279	Arm Shaft Bushing (2)
27	544204-001	Arm Shaft Bushing Set Screw (2)
28	410335	Arm Shaft Balance Weight Comp.
29	544204-001	Arm Shaft Balance Weight Screw (2)
30	410325	Needle Bar Connecting Stud
31	544044	Needle Bar Connecting Stud Screw
32	410266	Needle Bar Connecting Link Pin Comp.
33	410422	Needle Bar Connecting Link Pin Oil Wick
34	410327	Needle Bar Connecting Link
35	410331	Needle Bar Crank Comp.
36	544203-001	Needle Bar Crank Rod Pin Screw
37	544204-001	Needle Bar Crank Screw (2)
38	544203-001	Needle Bar Connecting Link Pin
39	410338	Needle Bar Crank Rod Comp.
40	544203-001	Needle Bar Crank Rod Slide Block Pin Screw
41	410340	Needle Bar Crank Rod Slide Block Pin
42	511030	Needle Bar Crank Rod Slide Block
43	543801-006	Needle Bar Crank Rod Slide Block Pin Retaining Ring
44	410337	Needle Bar Crank Rod Comp.
45	410461	Needle Bar Eccentric Cam Comp.
46	544204-002	Needle Bar Eccentric Cam Set Screw (2)
47	410266	Needle Bar Crank Rod Pin Comp.
48	410422	Needle Bar Crank Rod Pin Oil Wick
49	410463	Needle Thread Take-up
50	544211-051	Needle Thread Take-up Screw
51	410451	Needle Bar Connecting Link Comp.

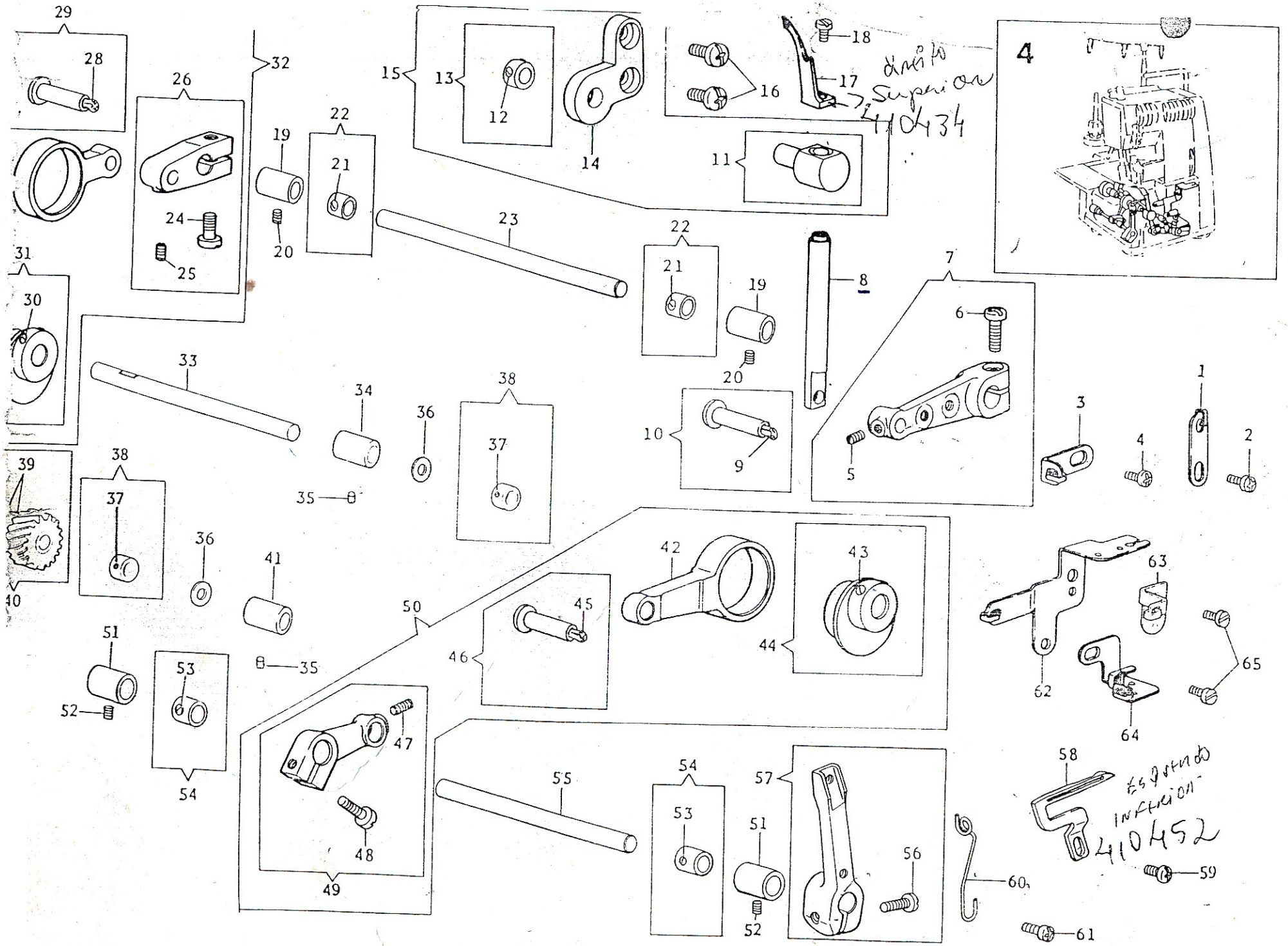
4
Drive Superior
410434
Equipment Inspection
410452

	PART NO.	DESCRIPTION
1	410455	Right Looper Thread Guide
2	544212-001	Right Looper Thread Guide Set Screw
3	410438	Left Looper Thread Guide
4	544212-001	Left Looper Thread Guide Set Screw
5	544203-001	Right Looper Retainer Driving Lever Stud Set Screw
6	544213-053	Right Looper Retainer Driving Lever Clamping Screw
7	410436	Right Looper Retainer Driving Lever Comp.
8	410435	Right Looper Retainer
9	410422	Right Looper Retainer Driving Lever Stud Oil Wick
10	410449	Right Looper Retainer Driving Lever Stud Comp.
11	410429	Right Looper Retainer Guide Comp.
12	544203-001	Right Looper Retainer Guide Collar Screw (2)
13	410432	Right Looper Retainer Guide Collar Comp.
14	410428	Right Looper Retainer Guide Bracket
15	410427	Right Looper Retainer Guide Bracket Comp.
16	544213-002	Right Looper Retainer Guide Bracket Screw (2)
17	410434	Right Looper
18	544413	Right Looper Screw
19	410279	Right Looper Shaft Bushing (2)
20	544204-001	Right Looper Shaft Bushing Set Screw (2)
21	544203-001	Right Looper Shaft Collar (4)
22	410291	Right Looper Shaft Collar Comp.(2)
23	410272	Right Looper Shaft
24	544213-054	Right Looper Shaft Lever Screw
25	544203-001	Right Looper Cam Rod Stud Set Screw
26	410441	Right Looper Shaft Lever Comp.
27	410440	Right Looper Cam Rod
28	410422	Right Looper Cam Rod Stud Oil Wick
29	410266	Right Looper Cam Rod Stud Comp.
30	544204-001	Right Looper Cam Set Screw (2)
31	410443	Right Looper Cam Comp.
32	410439	Right Looper Cam Rod Comp.
33	410290	Looper Driving Gear Shaft
34	410280	Looper Driving Gear Shaft
35	544204-001	Looper Driving Gear Shaft Bushing Set Screw (2)
36	542402	Looper Driving Gear Shaft Collar Thrust Washer (2)
37	544203-001	Looper Driving Gear Shaft Collar Screw (4)
38	410291	Looper Driving Gear Shaft Collar Comp. (2)
39	544204-001	Looper Driving Gear Screw (2)
40	410394	Looper Driving Gear Comp.
41	410279	Looper Driving Gear Shaft Bushing (long)
42	410446	Left Looper Cam
43	544204-001	Left Looper Cam Set Screw (2)
44	410443	Left Looper Cam Comp.
45	410422	Left Looper Cam Rod Stud Oil Wick
46	410266	Left Looper Cam Rod Stud Comp.
47	544203-001	Left Looper Cam Rod Stud Set Screw
48	544213-054	Left Looper Shaft Lever Clamping Screw
49	410447	Left Looper Shaft Lever Comp.
50	410445	Left Looper Cam Rod Comp.
51	410279	Left Looper Shaft Bushing (2)
52	544204-001	Left Looper Shaft Bushing Set Screw (2)
53	544203-001	Left Looper Shaft Collar Screw (4)
54	410291	Left Looper Shaft Collar Comp. (2)
55	410487	Left Looper Shaft
56	544213-053	Left Looper Holder Clamping Screw
57	410453	Left Looper Holder Comp.
58	410452	Left Looper
59	544211-052	Left Looper Screw
60	410456	Left Looper Holder Thread Guide
61	544212-001	Left Looper Holder Thread Guide Screw
62	410472	Looper Thread Guide
63	410371	Looper Thread Guide (small)
64	410478	Looper Thread Guide Plate
65	544212-001	Looper Thread Guide Screw (2)

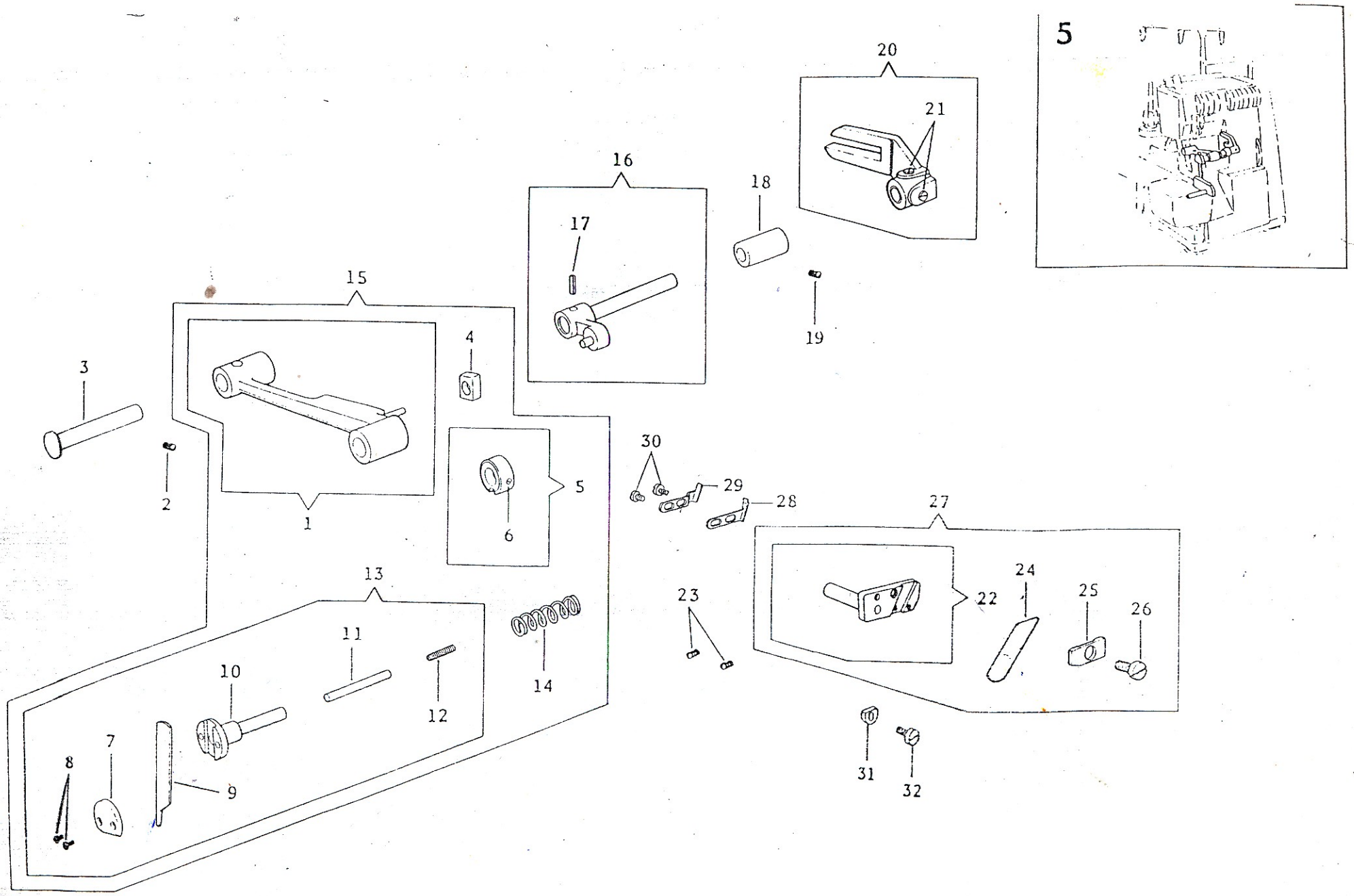
5
1
2
3
4
5
6
7
8
9
10
11
12
13
14
15
16
17
18
19
20
21
22
23
24
25
26
27
28
29
30
31
32

	PART NO.	DESCRIPTION
1	410299	Knife (movable) Lever Comp.
2	544204-001	Knife (movable) Lever Hinge Stud Screw
3	410310	Knife (movable) Lever Hinge Stud
4	540254	Knife (movable) Lever Slide Block
5	410308	Knife (movable) Holder Collar Comp.
6	544203-001	Knife (movable) Holder Collar Set Screw
7	410305	Knife (movable) Holder Plate
8	544257	Knife (movable) Holder Plate Screw (2)
9	410303	Knife (movable)
10	410304	Knife (movable) Holder
11	410306	Knife (movable) Clamping Pin
12	544203-004	Knife (movable) Clamping Pin Screw
13	410302	Knife (movable) Comp.
14	410307	Knife (movable) Holder Spring
15	410298	Knife (movable) Lever Comp.
16	410312	Knife (movable) Lever Driving Arm Comp.
17	543809-002	Knife (movable) Lever Driving Arm Spring Pin
18	410316	Knife (movable) Forked Lever Stud Bushing
19	544204-001	Knife (movable) Forked Lever Stud Bushing Set Screw
20	410317	Knife (movable) Forked Lever (comp.)
21	544204-001	Knife (movable) Forked Lever Screw (2)
22	410296	Knife (stationary) Holder
23	544207-011	Knife (stationary) Holder Screw (2)
24	410295	Knife (stationary)
25	410297	Knife (stationary) Clamping Plate
26	544256	Knife (stationary) Clamping Plate Screw
27	410294	Knife (stationary) Comp.
28	410473	Needle Guard (front)
29	410474	Needle Guard (rear)
30	545180	Needle Guard Set Screw (2)
31	410489	Knife (stationary) Holder Positioning Plate
32	544211-002	Knife (stationary) Holder Positioning Plate Screw

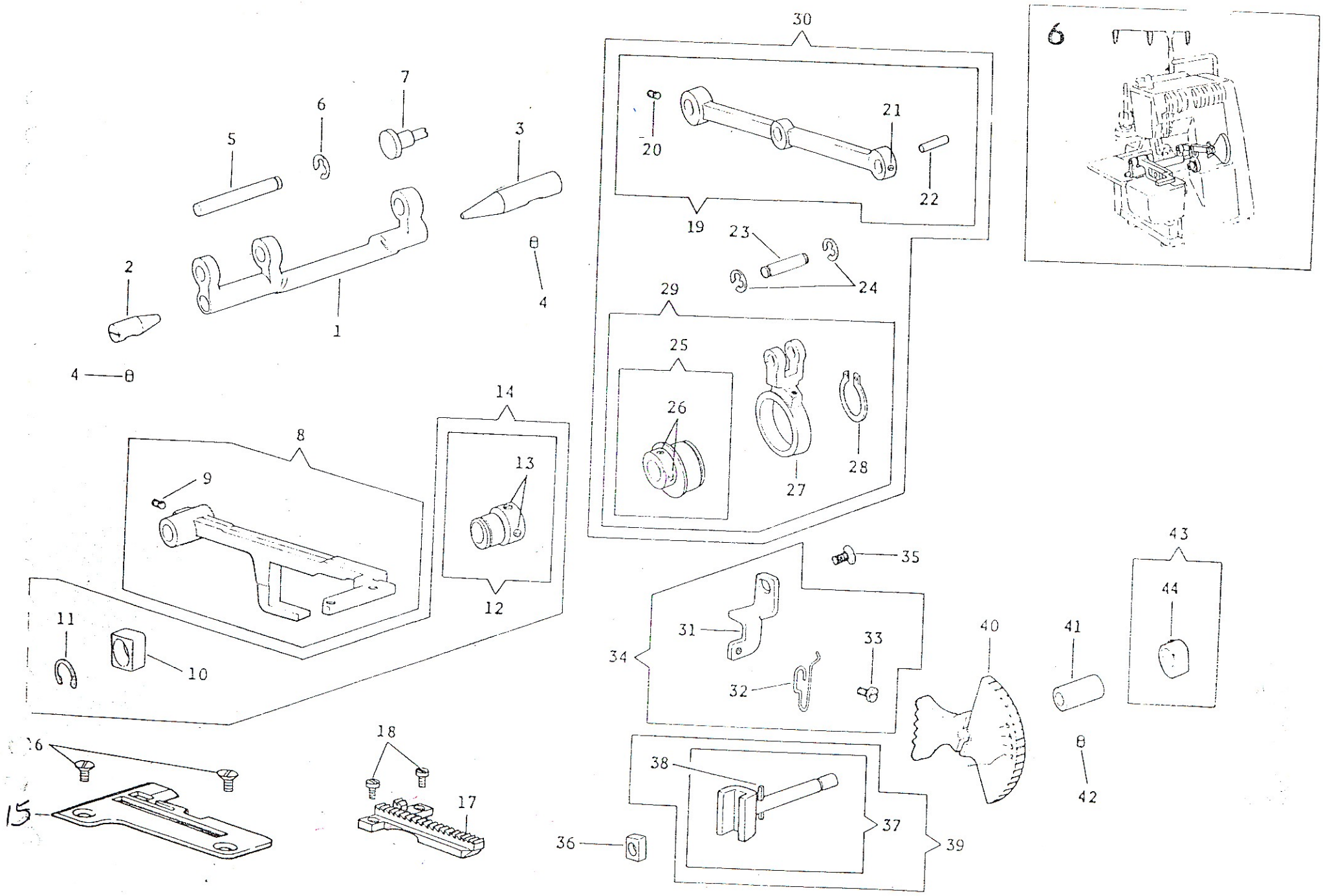
6
30
7
6
5
3
20
21
22
19
23
24
2
1
4
29
25
26
27
28
4
14
8
13
9
12
11
10
35
43
44
31
33
34
32
40
41
42
16
18
15
17
38
37
36
39

	PART NO.	DESCRIPTION
1	410378	Feed Crank
2	410379	Feed Crank Pin Center (left)
3	410380	Feed Crank Pin Center (right)
4	544204-001	Feed Crank Pin Center Screw (2)
5	410381	Feed Crank Pin
6	543801-006	Feed Crank Pin Retaining Ring
7	410382	Feed Crank Eccentric Pin
8	410399	Feed Bar Comp.
9	544204-001	Feed Crank Pin Screw
10	410387	Feed Lifting Cam Slide Block
11	543818-010	Feed Lifting Cam Slide Block Retaining Ring
12	410385	Feed Lifting Cam Comp.
13	544204-001	Feed Lifting Cam Set Screw (2)
14	410384	Feed Lifting Cam Comp.
15	410460	Throat Plate
16	504050-851	Throat Plate Screw (2)
17	410459	Feed Dog
18	544103	Feed Dog Screw (2)
19	410364	Feed Regulator Crank Rod Comp.
20	544204-001	Feed Crank Eccentric Pin Screw
21	544203-001	Feed Regulator Slide Block Stud Screw
22	410373	Feed Regulator Slide Block Stud
23	410363	Feed Crank Rod Pin
24	543801-006	Feed Crank Rod Pin Retaining Ring
25	410360	Feed Cam Comp.
26	544203-001	Feed Cam Screw (2)
27	410362	Feed Crank Rod
28	543802-014	Feed Cam Retaining Ring
29	410359	Feed Cam Comp.
30	410393	Feed Regulator Crank Rod Comp.
31	410376	Feed Regulator Dial Spring Bracket
32	410377	Feed Regulator Dial Spring
33	544212-001	Feed Regulator Dial Spring Screw
34	410375	Feed Regulator Dial Spring Bracket Comp.
35	544213-001	Feed Regulator Dial Spring Bracket Screw
36	540254	Feed Regulator Slide Block
37	410367	Feed Regulator Comp.
38	543807-005	Feed Regulator Stud Pin
39	410366	Feed Regulator Comp.
40	410374	Feed Regulator Dial
41	410370	Feed Regulator Stud Bushing
42	544204-001	Feed Regulator Stud Bushing Set Screw
43	410409	Feed Regulator Stud Collar Comp.
44	504007	Feed Regulator Stud Collar Screw

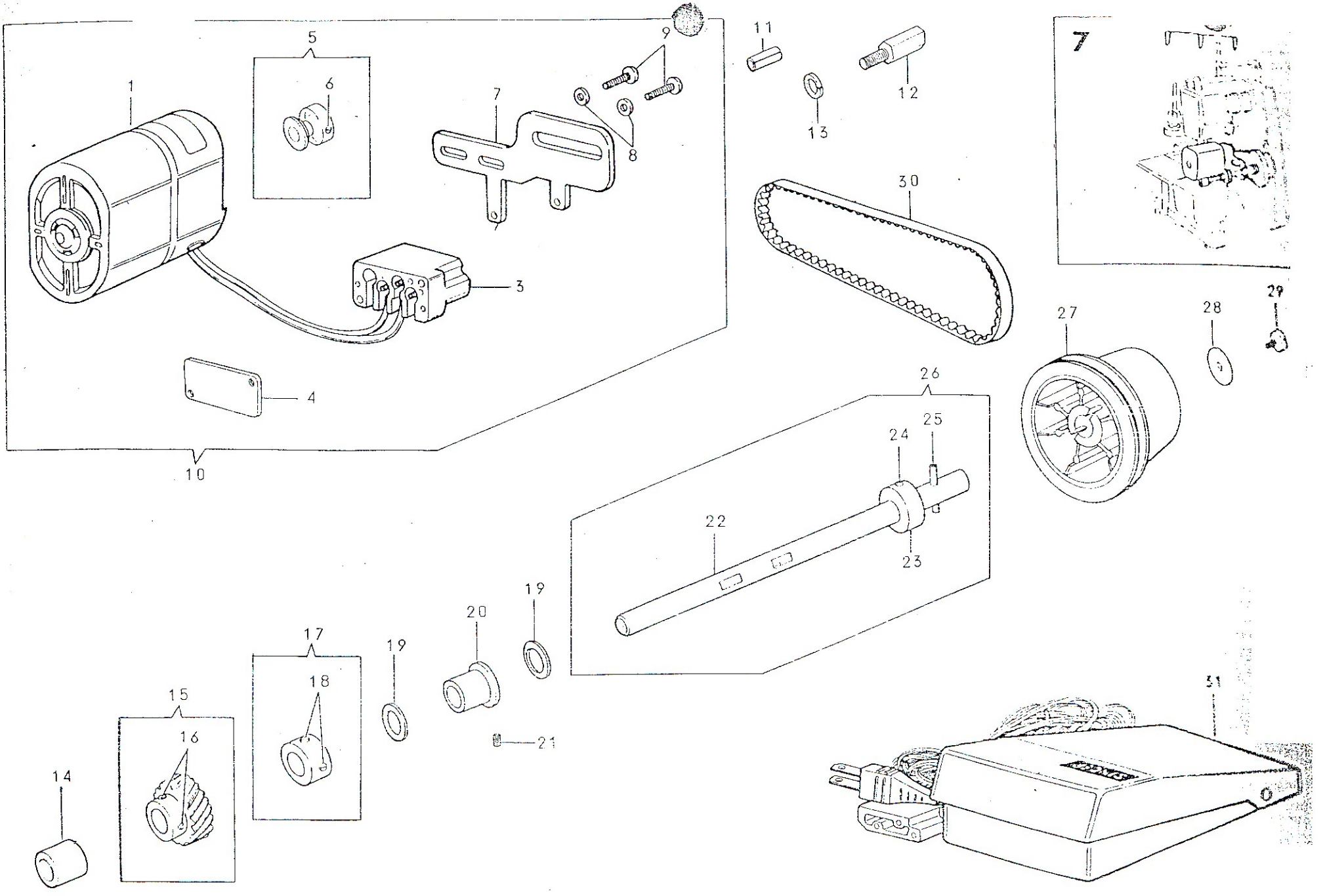
1
3
4
5
6
7
8
9
10
11
12
13
14
15
16
17
18
19
19
20
21
22
23
24
25
26
27
28
29
30
31
7

	PART NO.	DESCRIPTION
1		
2		
3		
4		
5		
6		
7		
8		
9		
10		Motor Comp.
11	543811-001	Motor Bracket Guide Pin
12	544259	Motor Bracket Clamping Screw
13	543805-005	Motor Bracket Clamping Screw Washer
14	410252	Rotating Shaft Bushing (left)
15	410260	Rotating Shaft Gear
16	544204-001	Rotating Shaft Gear Set Screw (2)
17	410470	Rotating Shaft Collar Comp.
18	544204-001	Rotating Shaft Collar Set Screw (2)
19	408730	Rotating Shaft Thrust Washer (2)
20	410253	Rotating Shaft Bushing (right)
21	544204-001	Rotating Shaft Bushing (right) Set Screw
22	410257	Rotating Shaft
23	410469	Rotating Shaft Collar (Fixed)
24	543808-004	Rotating Shaft Collar Fositioning Pin
25	543809-004	Rotating Shaft Spring Pin
26	410256	Rotating Shaft Comp.
27	410268	Pulley
28	410400	Pulley Set Screw Washer
29	544273	Pulley Set Screw
30	543607	Motor Belt
31		Controller Comp.

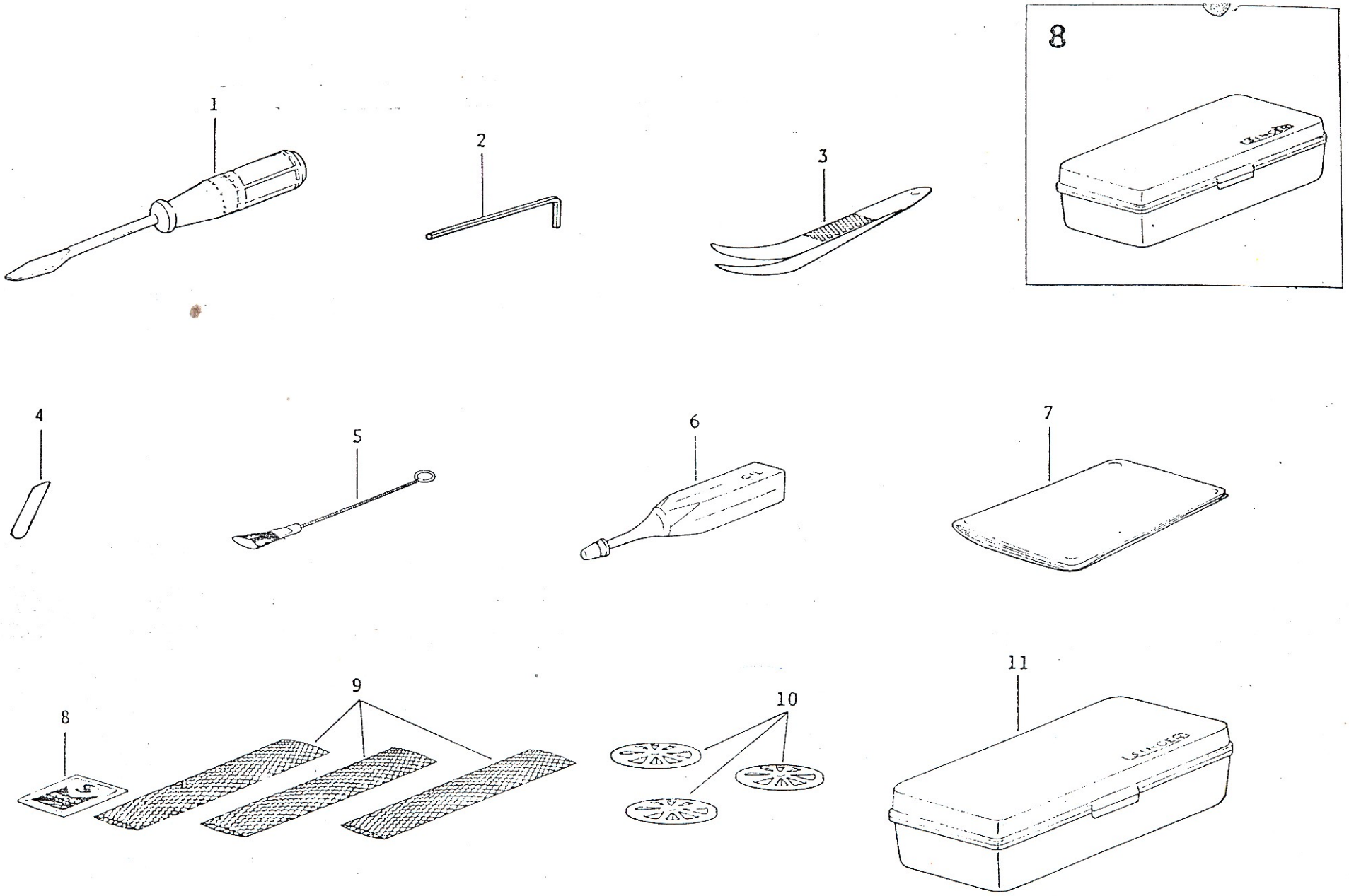
8
1
2
3
4
5
6
7
8
9
10
11

	PART NO.	DESCRIPTION
1	543513	Driver (medium)
2	543566	Hex-head Wrench
3	543162	Tweezers
4	470295	Knife (stationary)
5	543157	Brush
6	541574	Oiler
7	543158	Machine Cover
8	N2053-010	Needle (2)
8	N2053-014	Needle (3)
9	543131	Thread Unwinder Spool Net (3)
10	546894	Thread Unwinder Spool Cap (3)
11	543150-001	Accessory Box