REECE®

BUTTONHOLE MACHINES

series 103

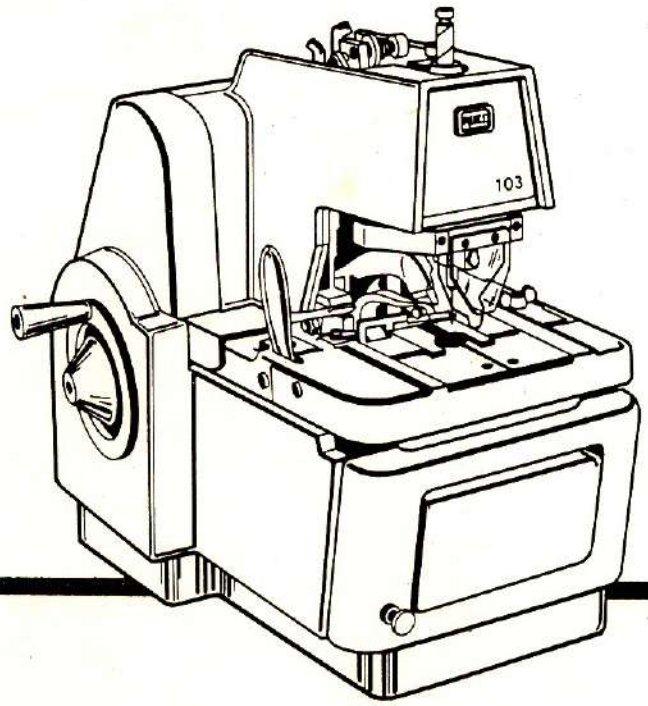

SERVICE MANUAL

97-0103-M-001
May 1986
Printed in U.S.A.

2373323

CONTENTS

INTRODUCTION

SECTION 1

SECTION 2

SECTION 3

SECTION 4

COMPONENTS & CONTROLS

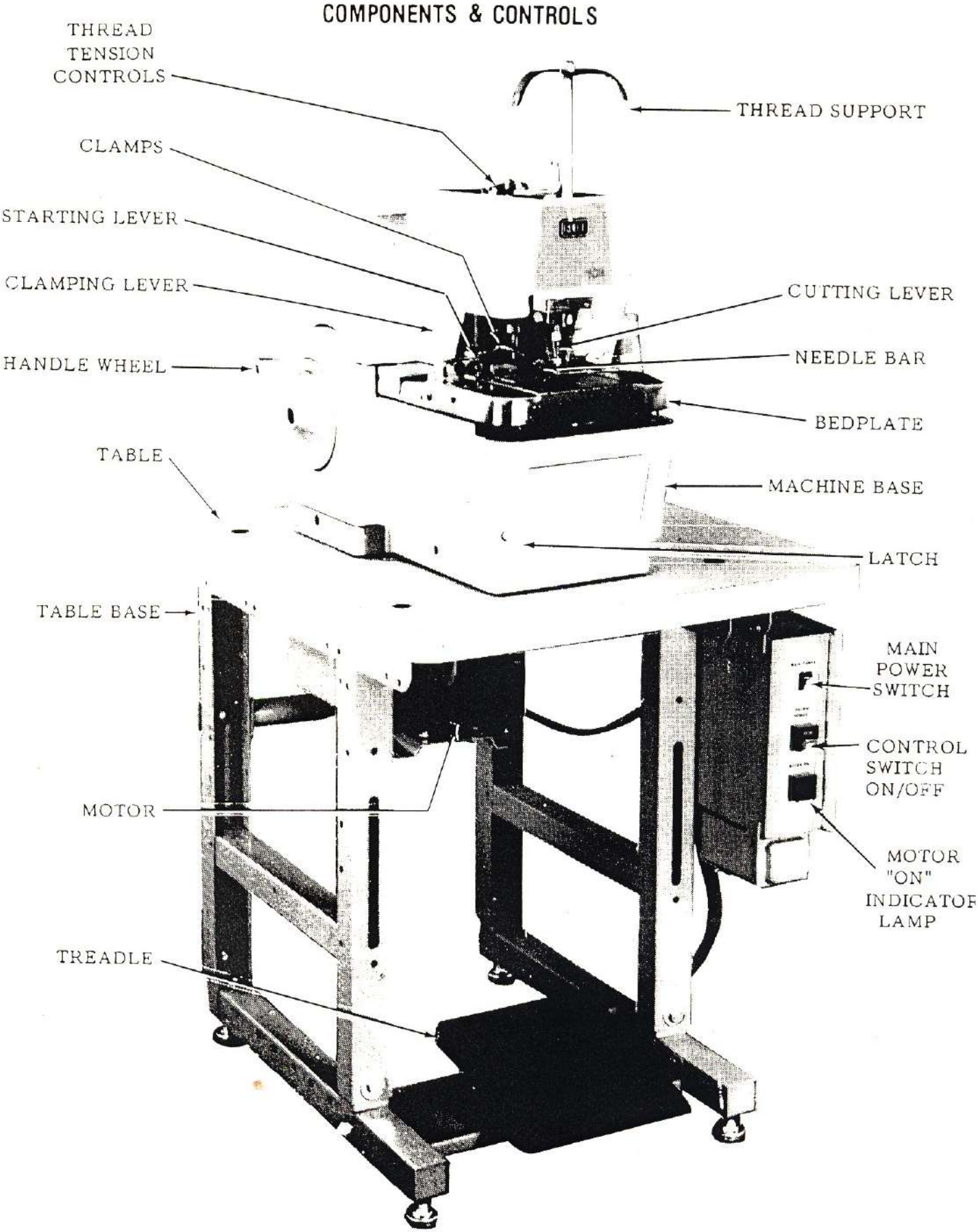

INTRODUCTION

GENERAL DESCRIPTION

STYLING

The Model 103 machine is enclosed with removable covers for a more modern appearance.

DRIVE

A 1750 RPM motor, mounted on the underside of the table, drives a large positive drive pulley on the left side of the head. Motor drive is by "V" belt.

The positive drive pulley (cutting wheel) is automatically clutched to the worm shaft to drive the main cam and the bedplate for all functions when not stitching. Transfer of drive to the stitch wheel is accomplished through the shifting lever and three fork lever to engage the stitch wheel to the stitch pulley. Driving power is transmitted from the large positive drive pulley through a positive belt to a pulley on a cross shaft. The other end of the cross shaft holds a spur gear with direct engagement to another spur gear mounted on the stitch pulley.

The head and cam case are held stationary while the bedplate is driven. This feature reduces the tendency for racing the second side of the buttonhole.

STITCHING

Needle bar speed has been increased up to 2000 spm without a corresponding increase in noise level.

A quieter roll clutch instead of a rachet type stitch feed.

The feed cam follower is of a one piece construction and made wider at the pivot point for better support.

The upper thread tension cone spring is of a smaller wire size to obtain finer adjustment.

Ceramic thread guides have been installed in the base for better under thread and gimp control.

The takeup lever follower is a ball bearing for more positive contact on the head cam.

The looper groove in the head cam has been refined for quieter operation.

The needle bar rocking lever pivot point is provided with sidewise adjustment to prevent the roll stud from bottoming in the head cam groove.

SERVICING

To raise the head no longer requires belt removal and is assisted by a gas spring. A latch is provided to permit partial opening. An extension has been added to the stitch wheel for easier turning.

It is now easier to reverse the main cam to eliminate a bind. This is accomplished by removing the stitch feed link and arm and reversing the operation of the left hand crank.

The head and bedplate are designed with large openings for ease of access, replacing parts, or removing debris from the main cam without disassembling the machine.

SAFETY

The needle guard has been redesigned for simplicity and ease of access to the sewing area. New machine guard and covers are provided to prevent operator injury.

Electrical controls include a large pedal-operated emergency motor stop switch. A machine cycle can not be restarted without pressing a motor start switch.

REECE®

BUTTONHOLE MACHINES

series 103

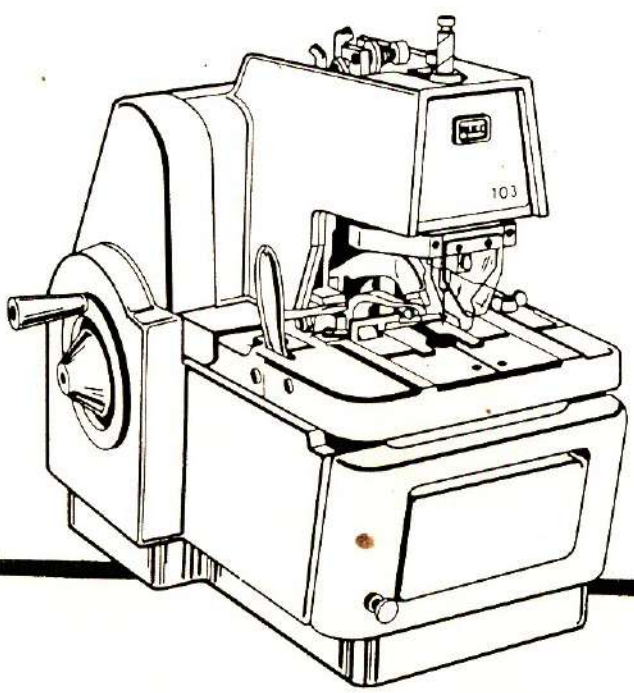

Section 1

MAINTENANCE

This section contains information for Reece Adjustable Flybar Machines — series 103 and other information common to all series 103 models. Information unique to other models will be located in sections dedicated to those particular models.

OPERATING INSTRUCTIONS

CAUTION

Before applying power see A4.

TO MAKE A BUTTONHOLE

1. Turn on main Power Switch and depress Control Power ON/OFF switch.

2. Secure lower thread and gimp under clip. Insert work material under clamp feet. Clamps may be manually locked and automatically locked by the machine. Draw off three inches of upper thread and hold taught.

3. Depress starting lever. The machine will complete one buttonhole, trim the upper thread, stop and release the work.

4. Remove work material. Trim lower thread and gimp.

TO STOP THE MACHINE DURING A CYCLE

Heel treadle to immediately stop all machine operations.

To remove work in case of mislocation or unthreading:

1. Stop machine.

2. Release trip lever by pulling toward operator, turn stitch wheel until it locks. Release clamps by pushing clamp lever and remove material and trim threads.

3. Lock clamps and press STARTING LEVER to return machine to "home" position.

A complete cycle may be made under power including cutting, without sewing: lift Lever (A) and hold - depress Starting Lever. After machine has traveled a short distance, release Lever (A).

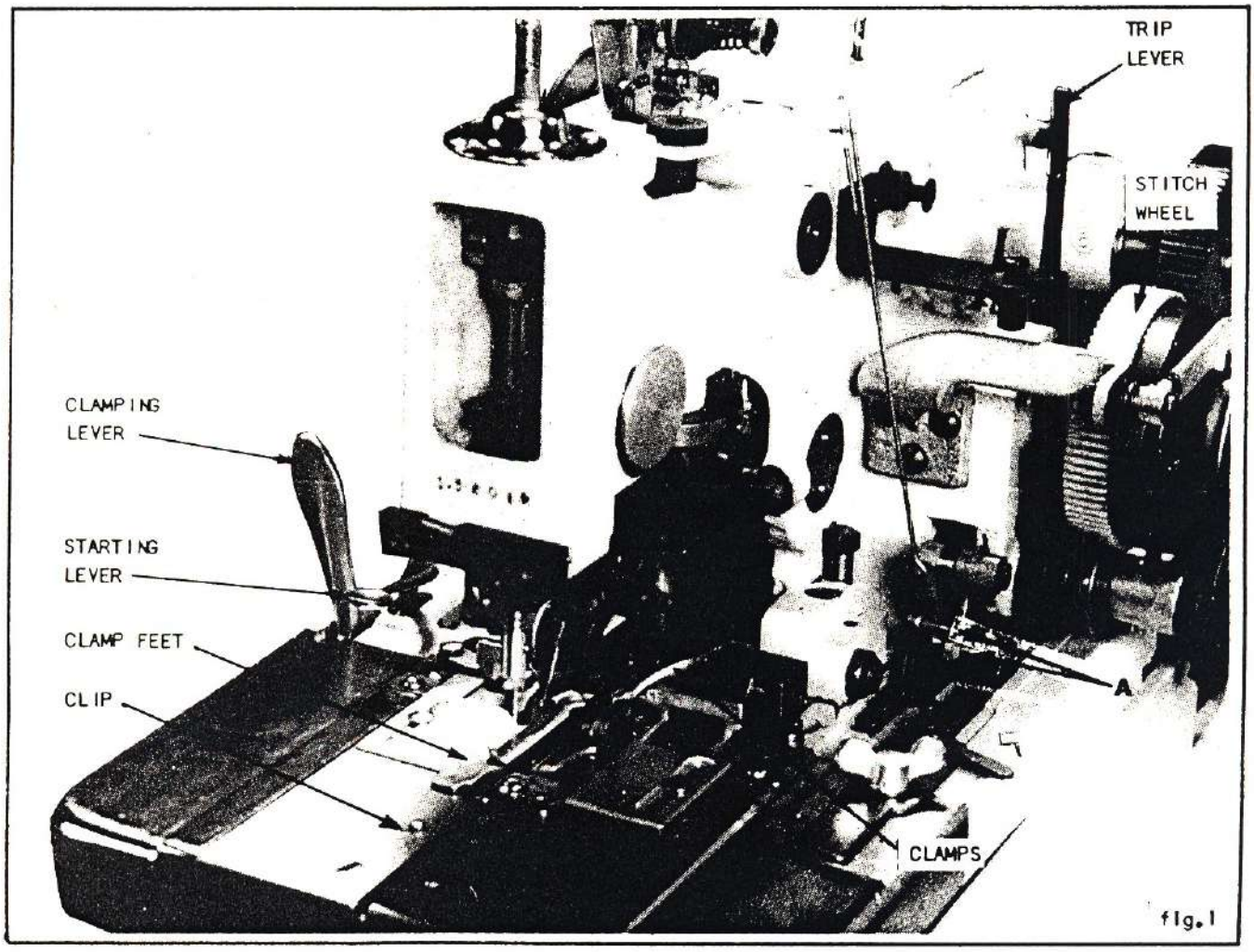

fig.1

Set Stop Motion as follows:
(Use gauge 03-0279 whenever possible)

Check and set Stop Motion in CA Mode.

1. Under power, cycle machine through to home (rear) position. Hand crank L.H. wheel slowly watching for any further rearward movement of the bedplate. If additional rearward movement exists, loosen nut (A, fig. 2) and adjust stud (B) slightly forward. Retighten nut (A). Repeat this cycling procedure until bedplate reaches home position at the end of the cycle and additional hand cranking can no longer cause further rearward bedplate movement.

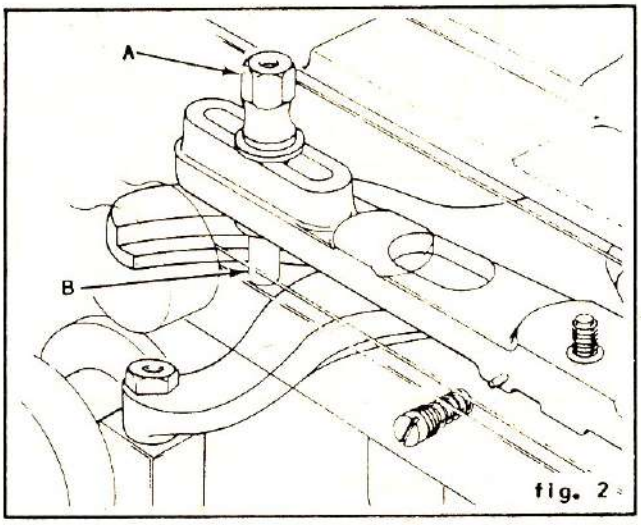

fig. 2

2. With machine now in home position, adjust roll (C, fig. 3) to rest on length gauge by means of screw (D) and check nut (E). Proper clearance between roll (C) and length gauge is .005" to a slight drag.

3. With machine still in home position, adjust bumper against stud, (F, fig. 3). Bumper is correctly adjusted when lever (H) can be lifted and link (J) does not string forward. Bumper should not be adjusted so as to force stud (F) against the back of slot of lever (H).

4. When R.H. (stitch) wheel is locked, set roll (K, fig. 3) of rocking lever to stop wheel. Loosen screw (L). Remove all end play between the three fork lever and the rocking lever as shown in fig. 3. Clearance between roll (K) and stop wheel should be from "daylight" + .010". Tighten screw (L). Recheck adjustment #2.

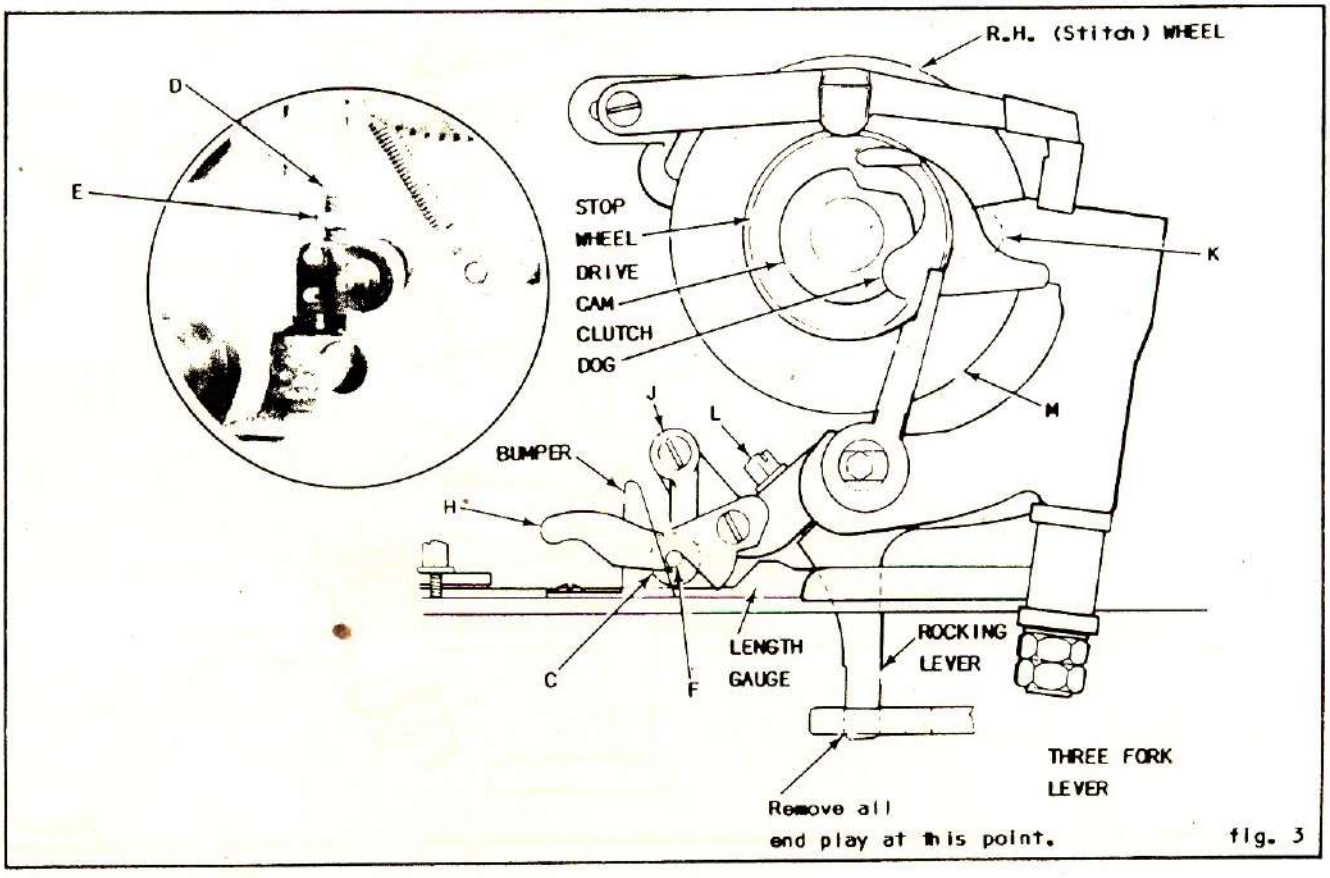

fig. 3

5. Adjust eccentric latch (M) so that R.H. (stitch) pulley is freewheeling. Loosen screw (N, fig. 4) and rotate eccentric (P) so that its wide side is towards the rear of machine and eccentric latch (M) is against the ledge of stop wheel holding clutch dog approximately one-half way between the drive cam and the inside diameter of R.H. (stitch) pulley. Retighten screw (L, fig. 3).

6. Crank machine until roll (C, fig. 4) reaches the high point of length gauge. Turn R.H. (stitch) wheel until dog is at 6 o'clock as shown. At this point, there should be 1/16" clearance between dog (Q) and the end of flyover lever (R). To adjust, loosen screw (S) and move flyover lever front or back as necessary. Retighten screw (S).

7. Lift lever (H, fig. 5) and allow link (J) to come forward. There should now be a 1/64" clearance between dog (Q) and flyover lever (R). To adjust, loosen nut (T) and adjust position of rocking lever to obtain this setting. Retighten nut (T).

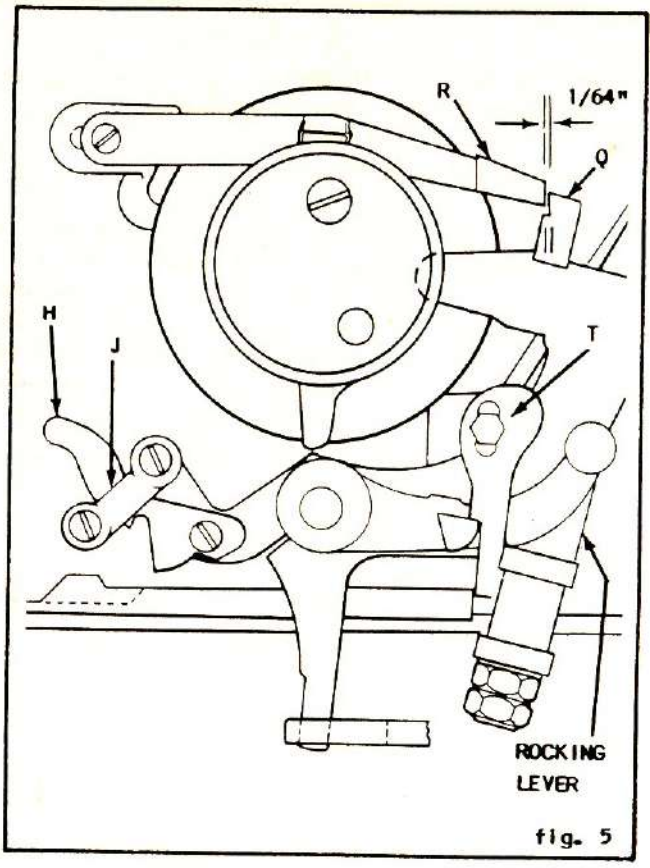

fig. 5

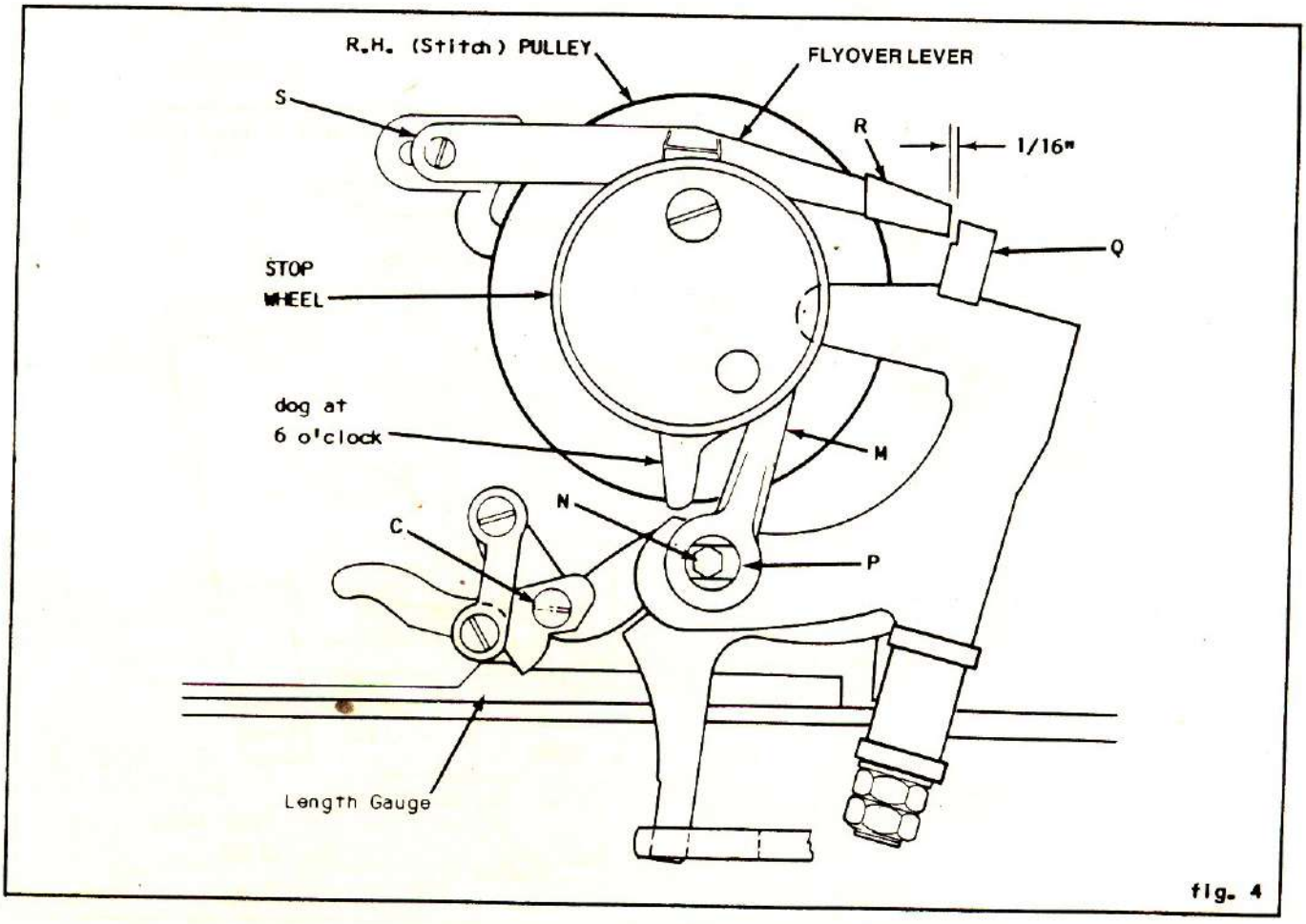

fig. 4

8. Turn R.H. (stitch) wheel until dog is at twelve o'clock and releases trip lever (see fig. 6). At this point, dog (Q) should just touch underside of flyover lever (R) without lifting it. To adjust, loosen top bracket and move up or down to suit. Tighten the three screws that hold top bracket to machine head.

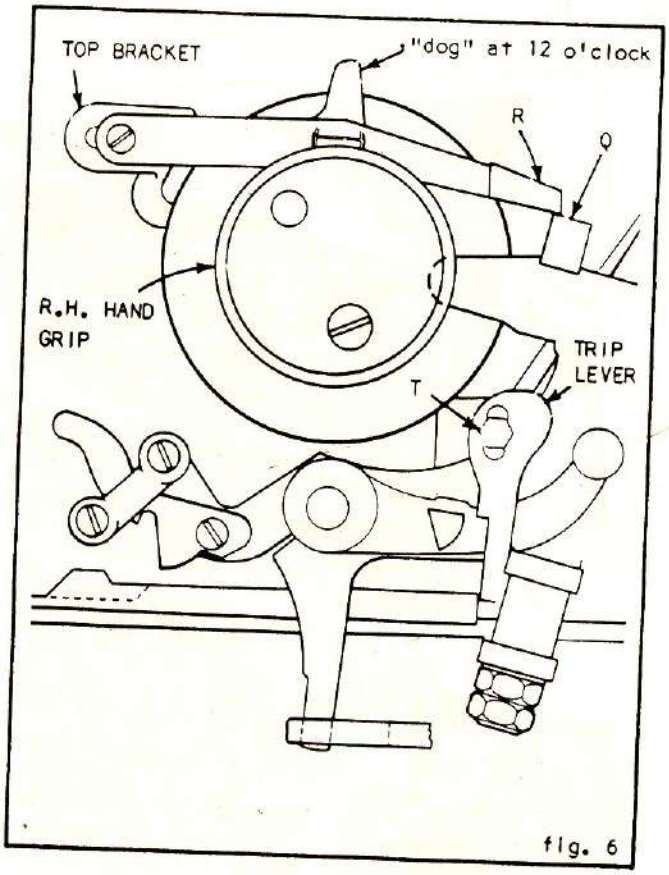

fig. 6

9. Leaving the machine in the above position, crank L.H. wheel until bedplate has moved completely through eye position. With dog still at twelve o'clock and trip lever released, L.H. dog (fig. 7) should just clear (cannot engage drive hub with light outward pressure on L.H. wheel). Up to .015" is permissable. To adjust, loosen screw (U, fig. 9) and move L.H. wheel in or out as necessary. Retighten screw (U).

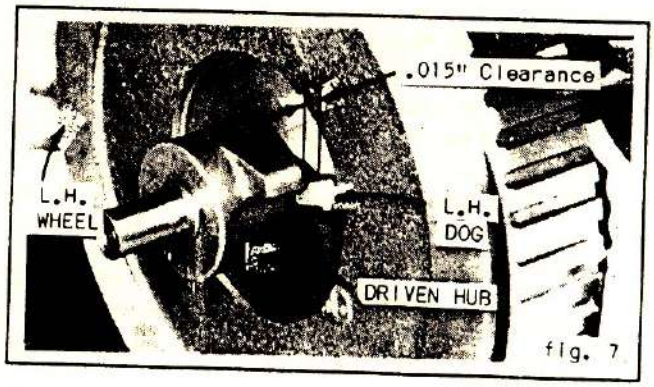

fig. 7

10. To adjust for simultaneous release of L.H. and R.H. dogs, with power off, depress starting lever (see fig. 1) to engage L.H. dog. While applying slight counter-clockwise pressure on R.H. hand grip (fig. 6), cycle machine back by turning pulley (V, fig. 8) counter-clockwise by hand. As roll (C, fig. 4) begins to ascend high point of length gauge, R.H. dog should release at same time or after L.H. dog releases and before L.H. dog separates .016".

fig. 8

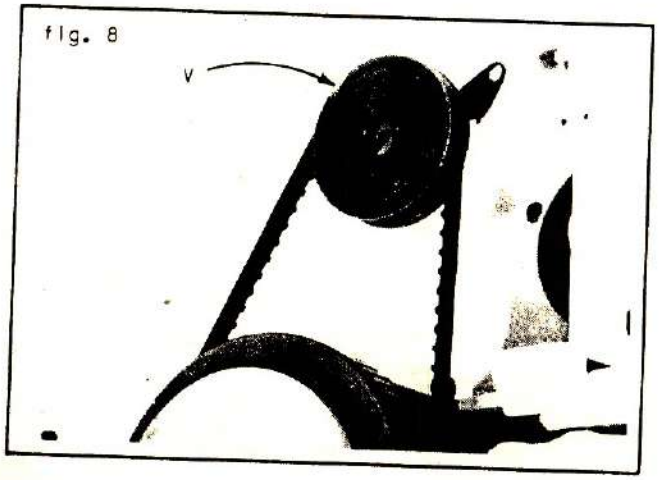

11. There should be a minimum gap of 1/16" between spool and L.H. wheel as shown in fig. 9.

fig. 9

FABRIC CLEARANCE BETWEEN MATS AND FEET

To raise clamp arms for more clearance, loosen nut (A) and turn screw (E) out. For less clearance turn screw in. Tighten nut.

When the clamps are in the raised position, the R.H. clamp foot should be approximately 1/16" - 1/32" lower than the L.H. clamp foot to equalize holding pressure.

There should be clearance between clamp arms and clamp pull downs over entire clamp travel. Widen clamp arm clevis as necessary to obtain clearance and prevent any binding.

fig. 10

BALANCING CLAMP PRESSURE

To apply more pressure between clamp arms and clamp feet:

Loosen large nut on inner side of stud (B). Loosen nut (C) and turn screw in for more clamp pressure, out for less, bringing stud down against screw. Tighten nuts.

UNCLAMPING

To raise clamps sooner at the end of the cycle:

Loosen bolt (D) and move toggle engaging arm forward for earlier rise, back for later rise. Tighten bolt.

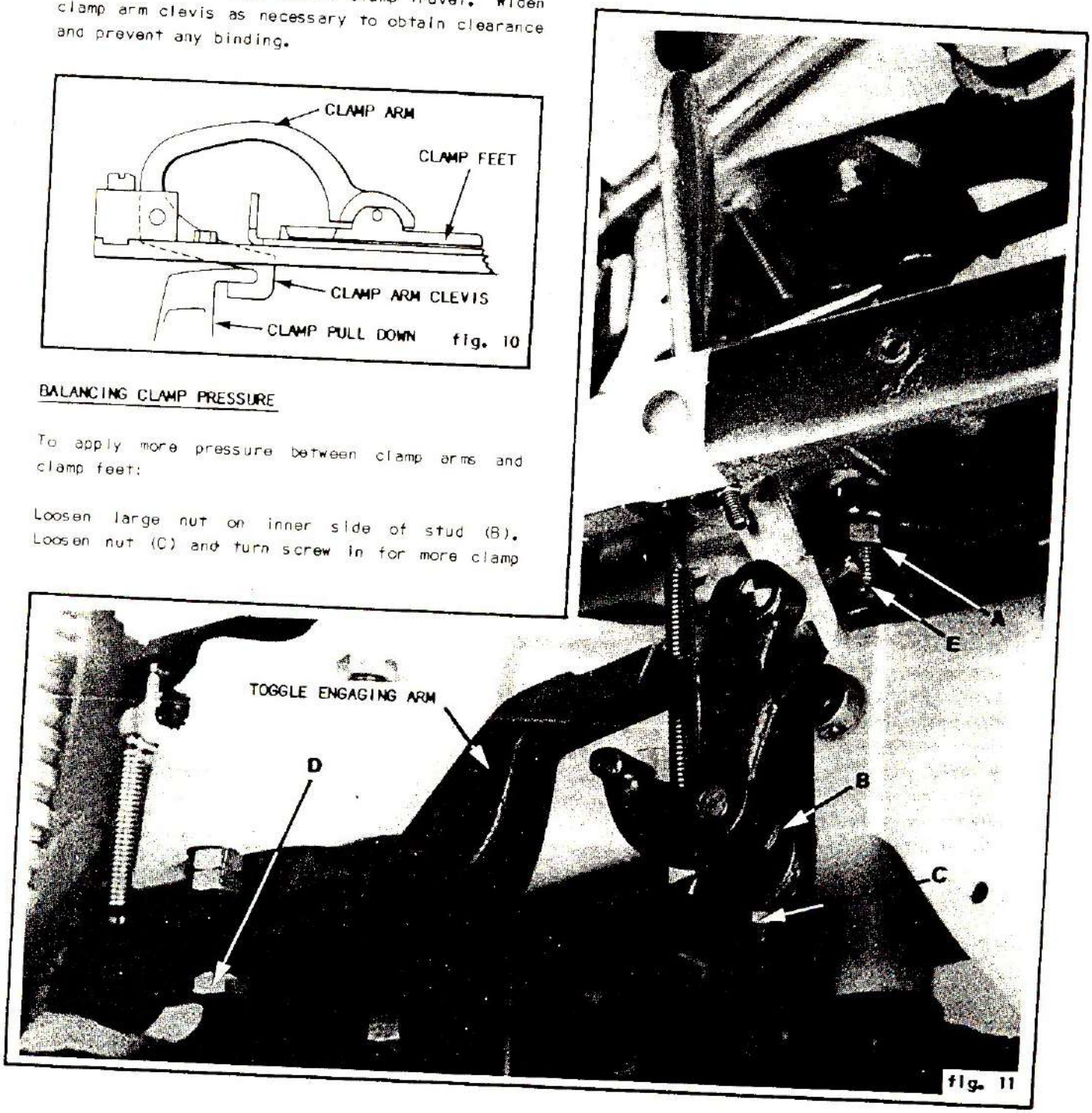

fig. 11

CLAMP SPREADING

Fabrics vary in the amount of spreading required between the clamp plates before sewing begins. In all cases the clamp plates should spread equally and parallel to each other.

ADJUST FOR PARALLEL SPREAD

Pull the clamp lever to lower the clamp feet and put pressure on the clamp mats. Loosen screws (G) to permit the "out" stops to float. Loosen screws (F) and pull the clamps sidewards until they rest against the bedplate ledges. Bring screws (F) to bear against the clamp plate edges and tighten. This adjustment causes the clamp plates to spread evenly (parallel to each other).

ADJUST FOR EQUAL SPREAD

Release the clamp lever, allowing the clamps to return to center. Reapply clamp pressure and crank the machine until the widest part of the spreader wedge is between the two rolls.

Adjust the "out" stops against the sides of the clamp plates so that the space between the clamp plate edges and the bedplate ledge is equal on both sides. Tighten screw (G).

ADJUSTMENT FOR AMOUNT OF SPREAD

The amount of spread needed to obtain the best result depends upon the type of fabric. Thicker fabrics usually require more spread than thinner fabrics.

To obtain more or less spread:

Loosen screws (E) and move the "in" stops inward for more spread or outward for less spread. The "in" stop position must be identical on each side or uneven spreading will result.

On CB machines, the center stroke of the needle must enter the cut, however, too much spread will narrow the bite of the vibration stroke. Try to obtain maximum bite by having minimum spread. The effect will be to pull the buttonhole together.

On CA machines, the spread is not as critical, however, important to hold material firmly and spread equally on both sides so that knife will not cut stitches.

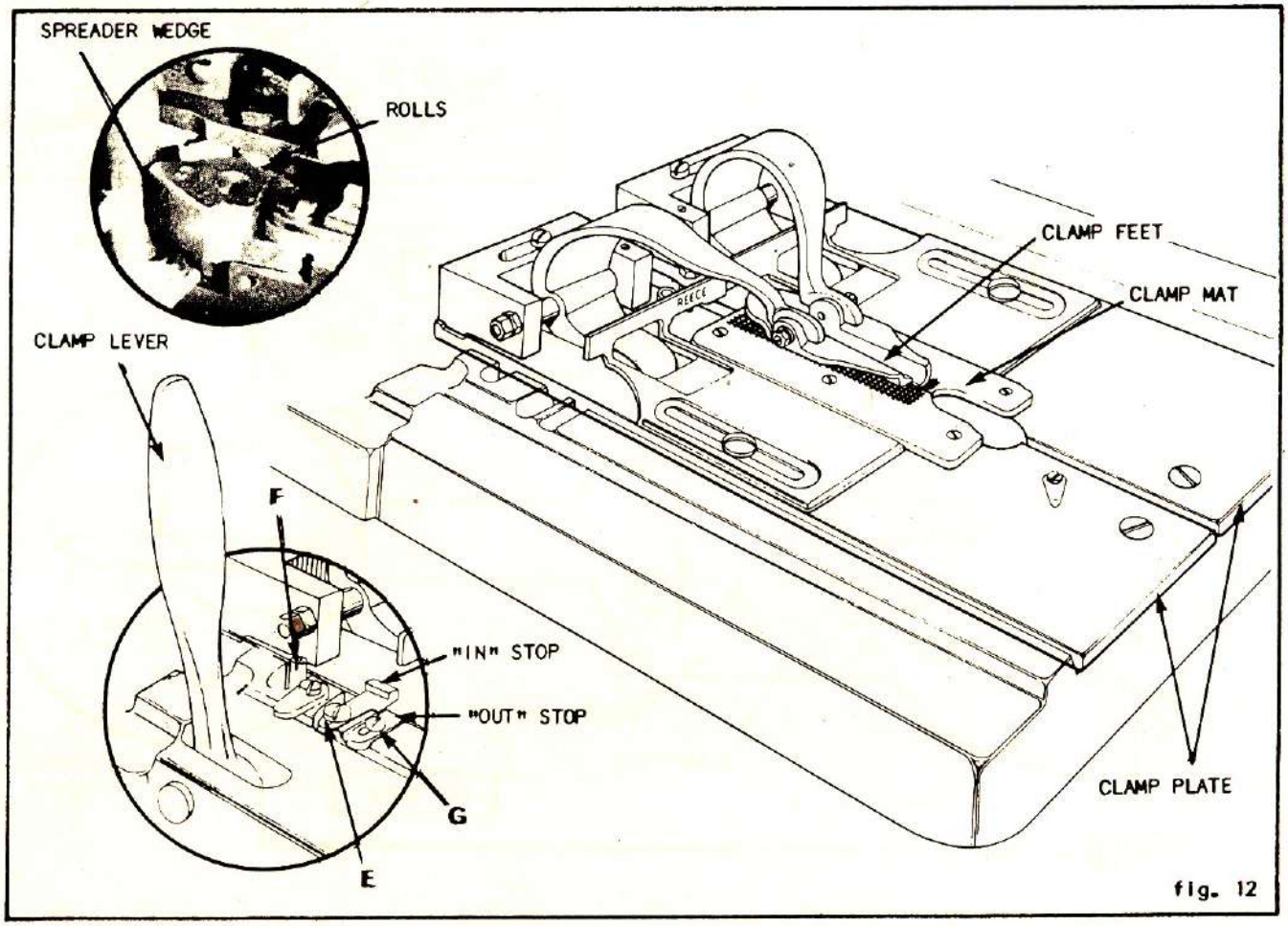

fig. 12

REPLACING CLAMP PARTS

CLAMP MATS

A new clamp mat must be contour filed and beveled to permit clearance between the edge of the mat and the throat plate when the machine goes through its cycle.

Remove clamp arms by means of screws(A). Check to see that the clamp plates are adjusted for parallel spread (see page A14). With the clamp plate held to maximum spread against the "out" stop, move the "in" stop outward to hold the clamp plate in the maximum spread position. Crank the machine slowly through its cycle. Remove and file the new clamp mat to obtain the following clearances:

On AF-CB and AF-CB/CA models, file the mat countour to clear the throat plate shoulder by 1/16" throughout the cycle.

On AF-CA models, file the mat contour to clear the raised portion of the throat plate by 1/32" all the way around.

When contour filling, an attempt should be made to finish between two rows of knurls for greater strength.

The underside of the clamp mat should now be filed to provide bevel for throat plate clearance when the clamp plates are under pressure from the clamp arms (see insert). The beveling operation must leave enough stock at the contoured edge so that the material can be held firmly without breaking the edge. All burrs and sharp edges must be removed.

CLAMP ARMS AND FEET

Clamp arms are installed so that the edge of each foot overlaps the clamp mat by the same amount that the clamp mat was set to clear the throat plate.

To adjust, loosen screw (H) and slide clamp block in or out as necessary.

Grind the foot contour to follow the mat contour. Remove all burrs and sharp edges.

Tighten nuts (J) to remove all side play. After tightening, the clamp arm must remain free enough to drop off its own weight.

Adjust clamp feet for fabric clearance as described on page A13.

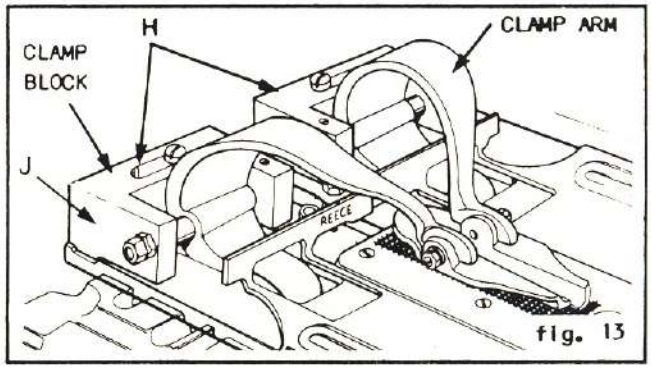

fig. 13

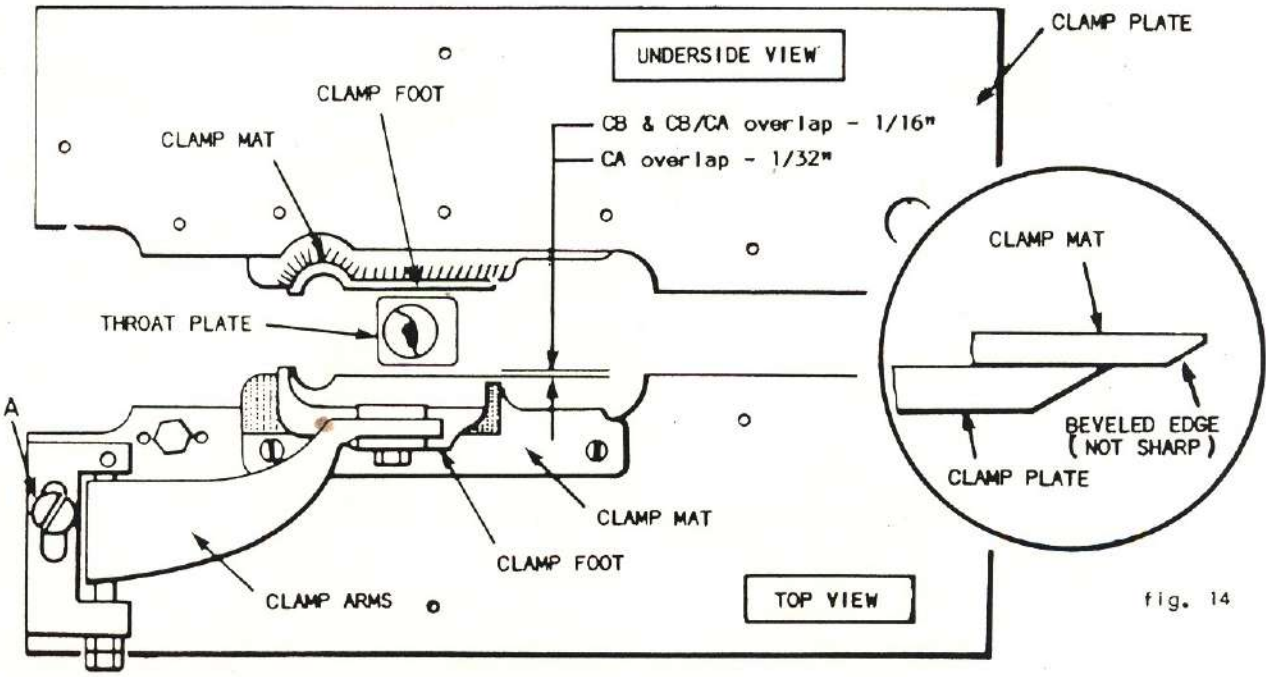

fig. 14

REPLACING CLAMP PARTS

CLAMP PLATES

To assure that clamp plates seat in the bed of the machine without rocking, they are slightly crowned to assure that all four corners contact the bed at the same time. The crowning should not be easily visible, but can be detected when a straight edge is held against the underside. To test for even contact at all four corners, place the clamp plate in position on the bedplate. Hold one front corner to see if any "rocking" occurs. This procedure is repeated on the two remaining opposite corners.

The clamp plate may be bent slightly to obtain equal seating on all four corners.

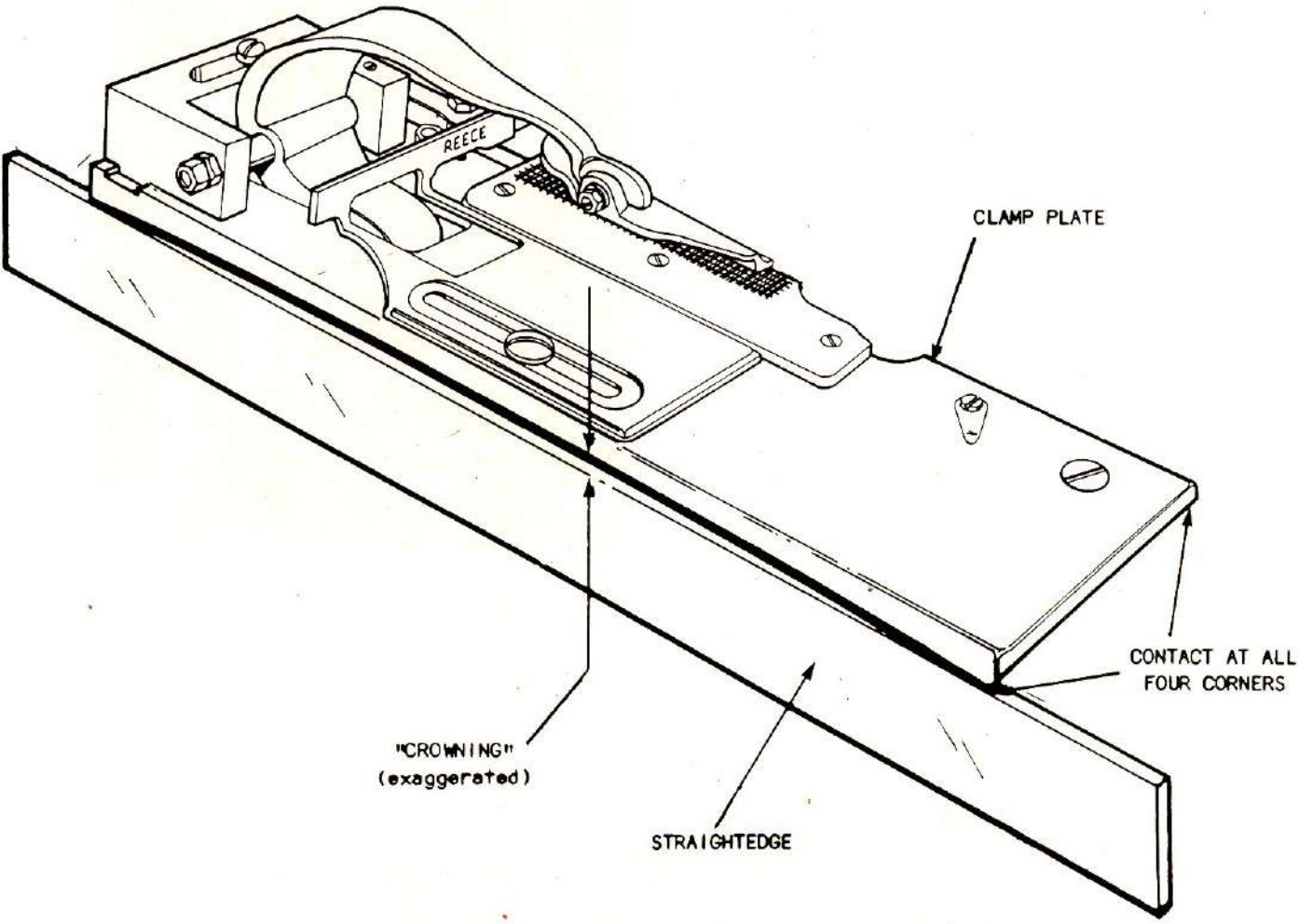

fig. 15

ALIGNING FLY BAR PLUNGERS WITH CAM PLATE

Plungers should enter slots in cam plate to a depth of 1/8 inch maximum.
To adjust: take up or let out with Nuts (A).

Plunger (B) should enter slot in cam plate when the roll on the lateral lever is at the peak (D) of the main cam.
To adjust: loosen nut (C) and tap bedplate.
Crank machine until the roll on the lateral lever is captured in peak (D) of main cam. At this point, plunger B) should have withdrawn from slot in cam plate.
To adjust: loosen screw (E) and adjust bracket against lever.

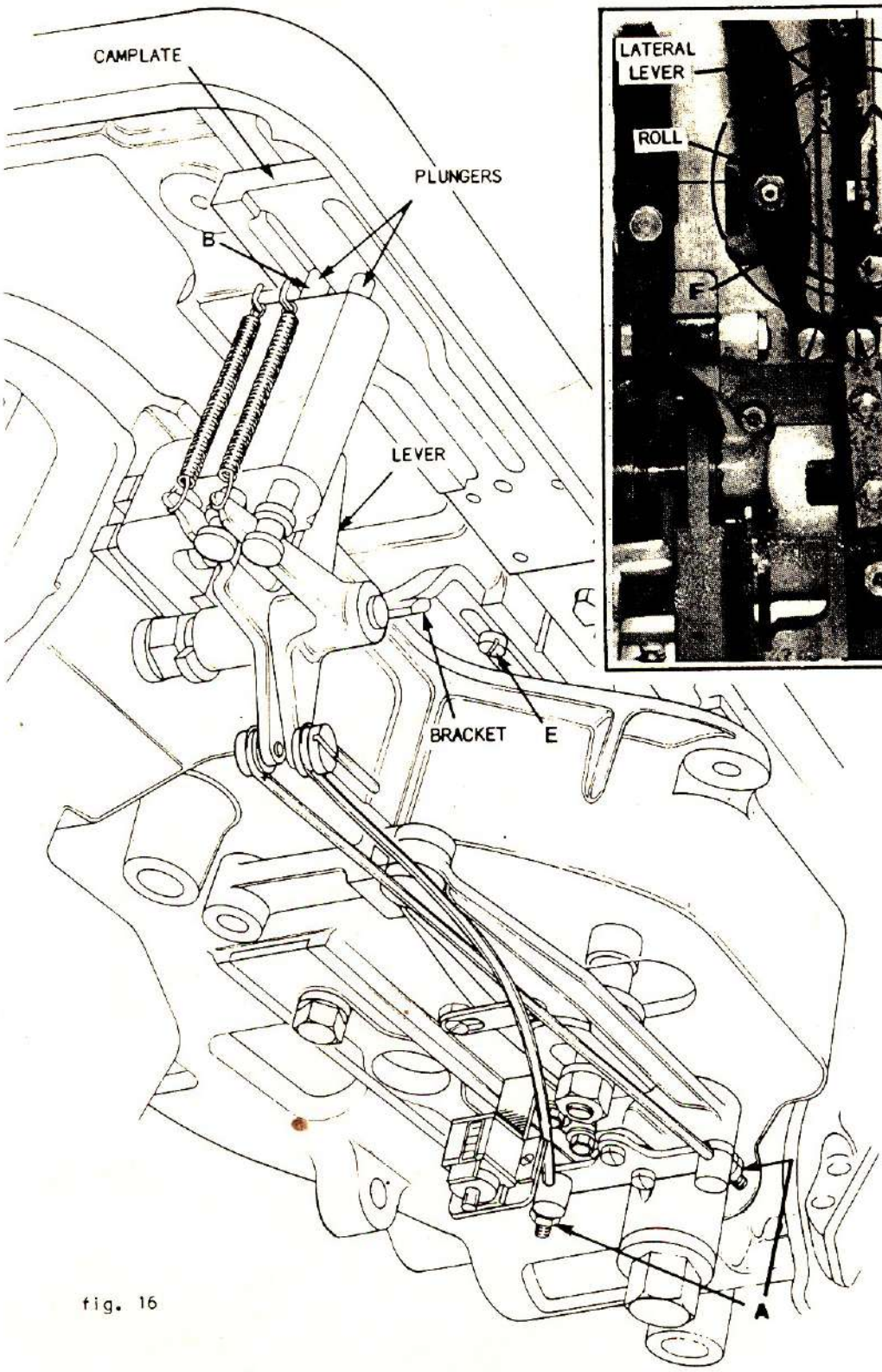

fig. 16

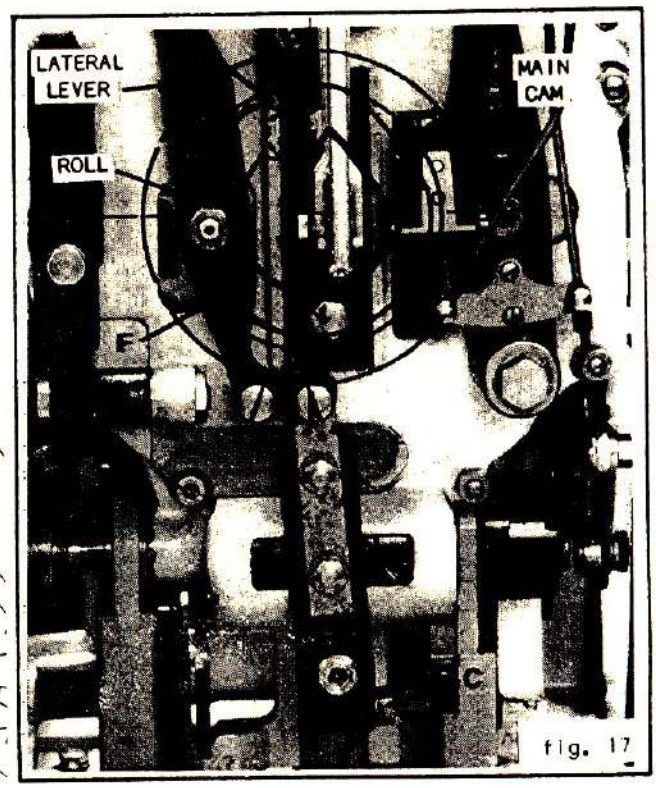

fig. 17

FLYBAR TACK

The end of the flybar tack should cross over the beginning flybar tack and continue one or two stitches longer. On buttonholes with no flybar, the ends of the stitching should be equal.

To adjust: loosen nut (F) and turn screw (G) in to shorten second flybar tack, turn screw out to lengthen. Tighten nut.

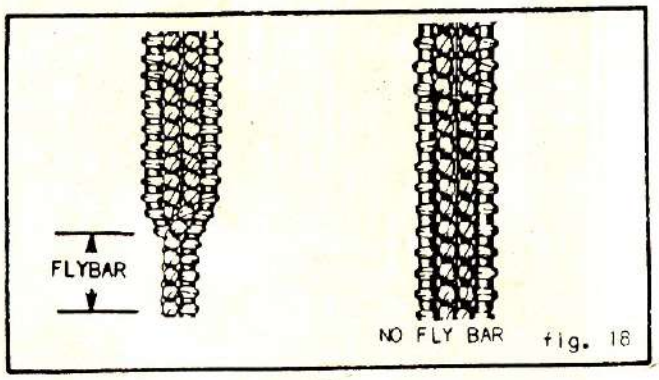

fig. 18

FLYBAR LENGTH

To adjust the length of flybar the machine will produce:

Loosen screw (J) and move lever forward for shorter flybar and back for longer flybar. Range of adjustment is from zero to 3/8 inch. Tighten screw.

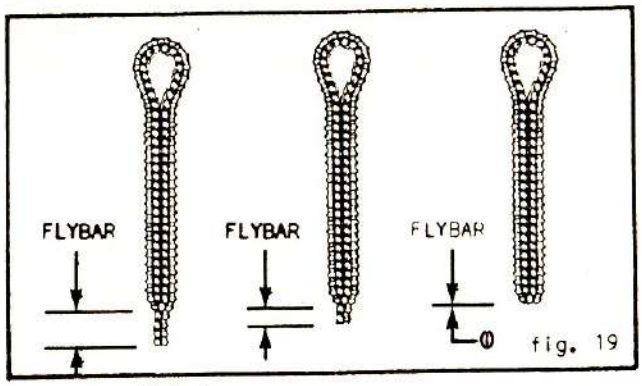

fig. 19

BUTTONHOLE LENGTH

To change the length of buttonhole the machine will produce:

Loosen screw (H). Move screw and length plate to line up arrow with length desired on length guide. Range of adjustment is from 1/2 to 1-1/4 inches on regular travel machines. Tighten screw.
Change cutting steel to conform to length setting.

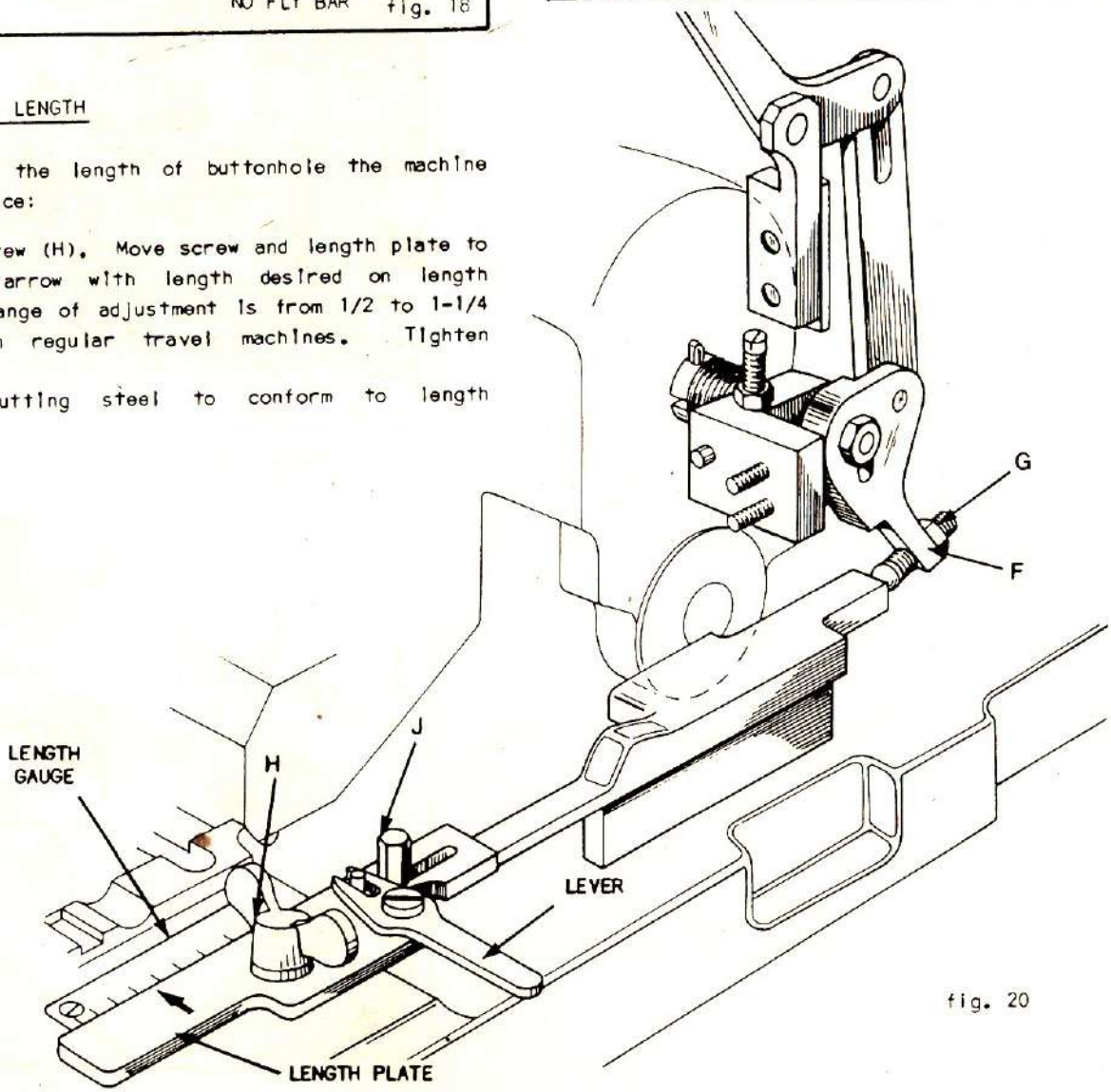

fig. 20

LATERAL MOVEMENT

(Movement of Stitch Pattern around Eye)

Raise the bedplate and check to see that screws (K) lie in the horizontal plane. If not, loosen screws (L) and correct.

"Pricking-In" Test: Precise alignment can be observed with the use of a "pricking" needle (02-0001-0-000) and a piece of kraft paper clamped in the sewing position. (A "pricking" needle is much shorter than a regular needle and is used to provide a pattern of needle punctures in the paper.

After observing shape of eye, proceed as follows:

If the lateral movement starts "too late", loosen eye stud (M) and move upward to advance lateral timing. Tighten (M).

If the lateral movement starts "too soon", loosen eye stud (M) and move down to retard lateral timing. Tighten (M).

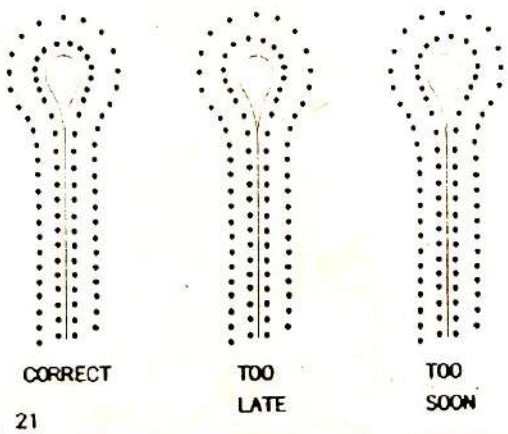

fig. 21

EYE/NO EYE

To stitch a straight buttonhole without an eye:

1. Move eye selector to no eye position.
2. Pull shifter lever forward to take stitches out of the eye.
3. Change cutting knife.

Also see stitching and cutting sections.

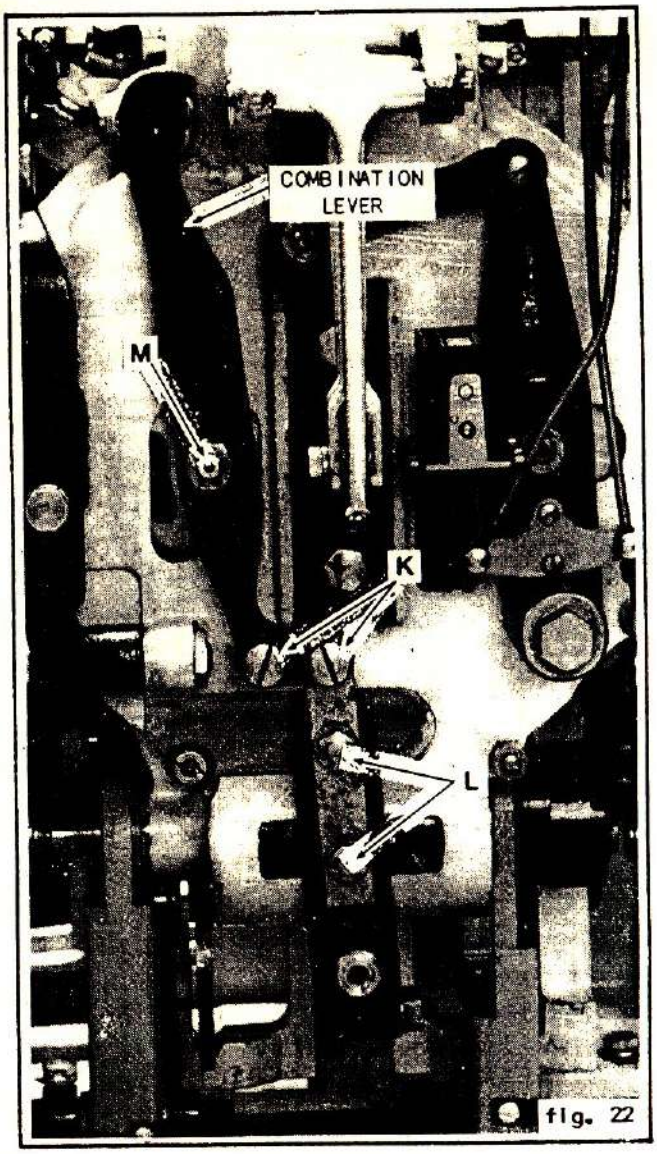

fig. 22

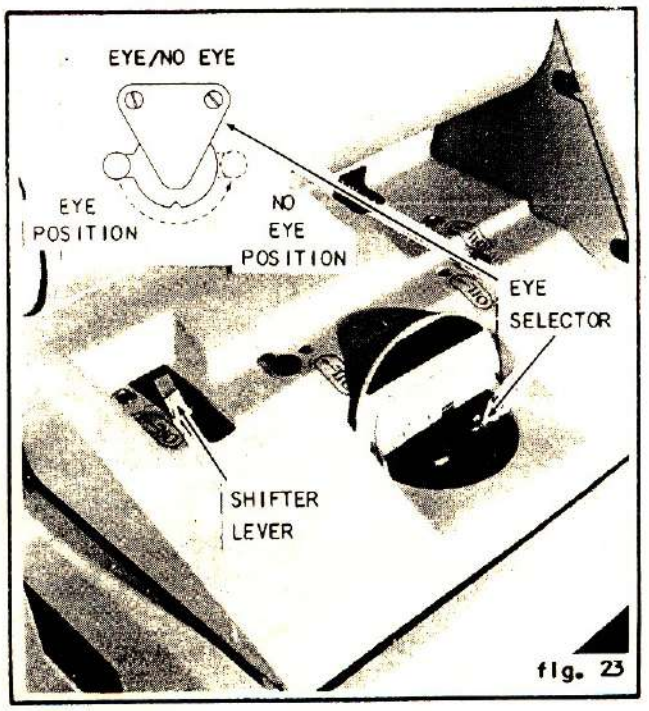

fig. 23

RACES

LOWER RACE

The lower race must be square with the bedplate, when stitching the straight sides of the buttonhole.

To adjust: loosen screw (N) and move lower sector. When assembling lower sector and gear, make certain sector teeth will not disengage at either end of swing. Tighten screw (N).

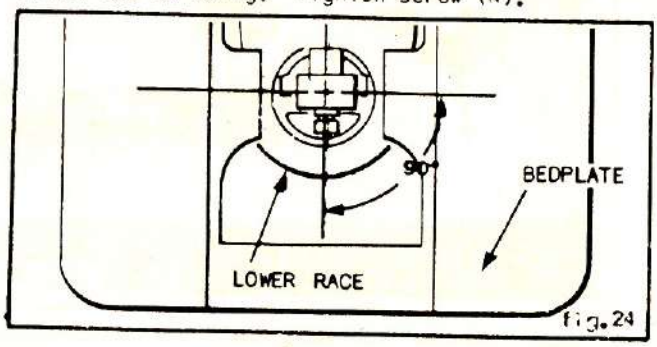

fig. 24

UPPER RACE

The needle should vibrate in perfect alignment with lower race.

To adjust: loosen screws (P) and move upper sector. When assembling sector and gear make certain sector teeth will not disengage at either end of swing. Tighten screws (P).

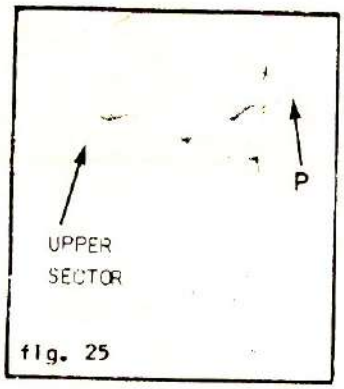

fig. 25

To check alignment of upper and lower races: Remove clamp plates and lift bedplate to its full back position. Crank machine until trimmer knife spindle is vertical. Sight along knife spindle to button caps on needle bar.

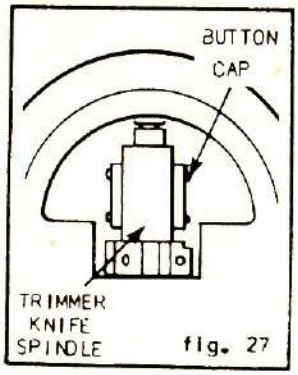

fig. 27

SECTOR TURNING

When stitching the end of the eye, the race must turn exactly 180°.

To adjust: loosen stud (P) and move forward for more turning, move back for less.

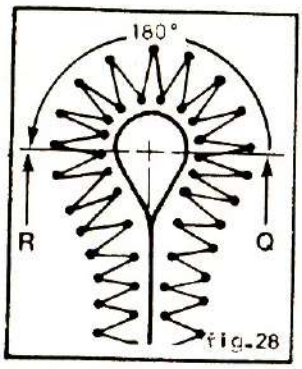

fig. 28

The race must begin to turn at the outermost point (Q) of the buttonhole eye and stop turning at other outermost point (R).

To adjust: loosen nut (S) and move stud forward to retard turning of the race. Move back to advance.

The race should be free to turn without play.

To adjust: loosen screw (T) in collar and tighten collar against bearing rings. Tighten screws (T).

The adjustments in this section are so related that each affects the others. While the adjustment should be made in order, it may be necessary to re-check steps after making other adjustments to obtain correct results.

fig. 26

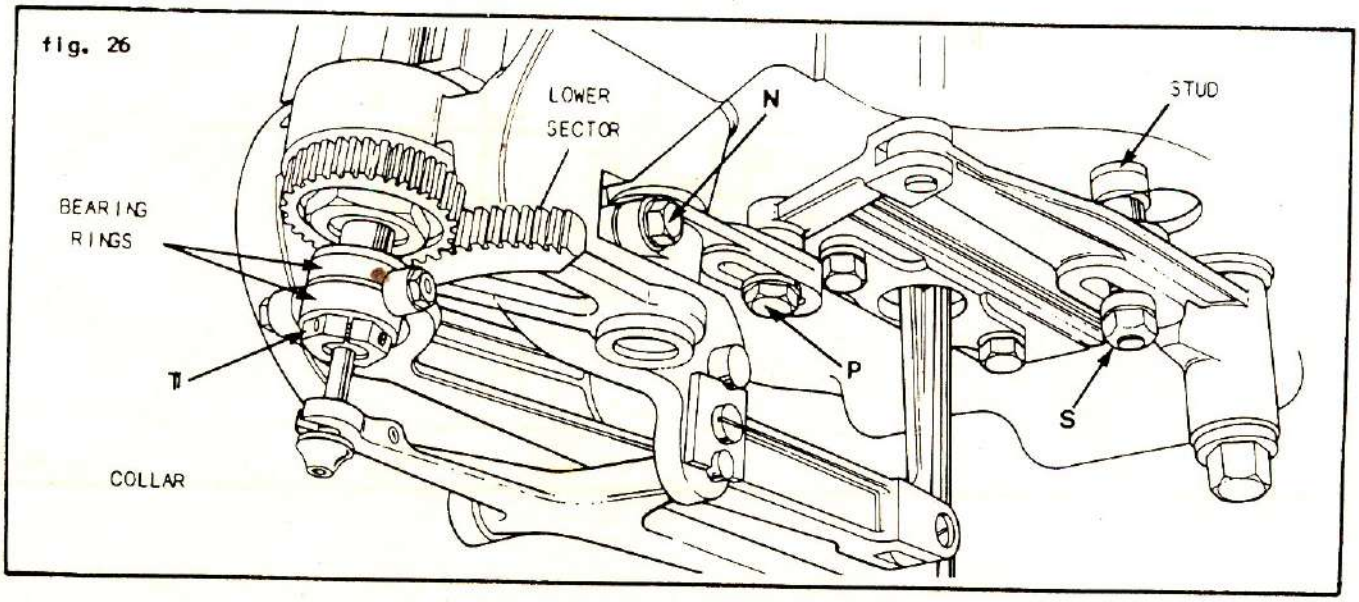

THROAT PLATE HEIGHT

When a new race has been installed, the top surface must be filed in order to obtain the correct height of the throat plate in the machine.

Before filing remove any excessive play between the head and the cam case as follows:

With bedplate in most forward position, loosen locknuts (U) and turn screws (V) inward until the play of the bedplate, between the head and the cam case is eliminated - or oil wick, tighten locknuts (U). Check rear support for flat contact with underside of bedplate (fig. 30).

CAUTION: It is quite possible, to adjust the screws further than necessary thereby causing a drag. For good machine performance, the adjustment should be just sufficient to keep the head and bedplate runways in contact with each other with a minimum of friction.

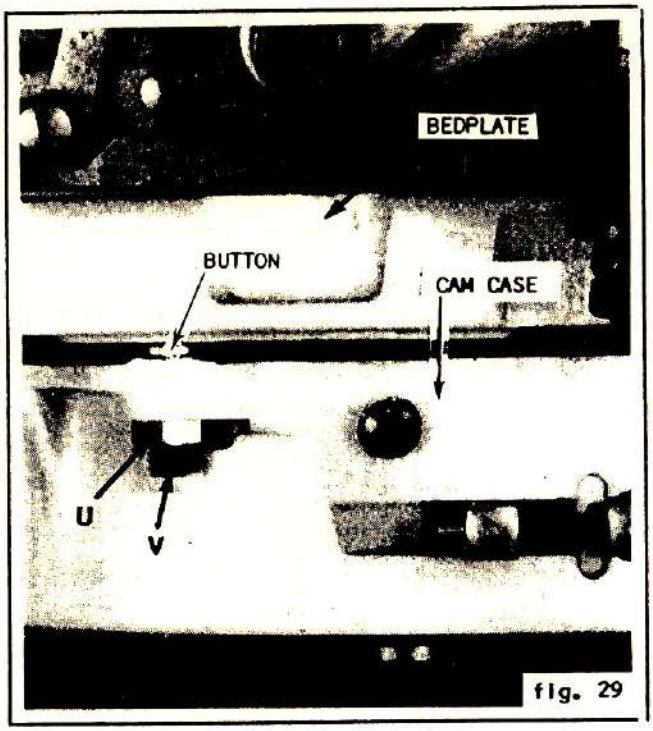

fig. 29

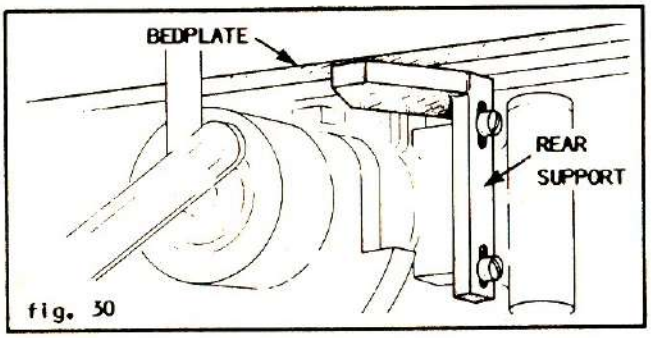

fig. 30

FILING TOP OF RACE

Place gauge (03-0270) across the top surface of the race (X) and bedplate at surfaces (W) and (Y). Then carefully file the top surface (X) flat until it measures exactly 3/32 of an inch above surfaces (W) and (Y).

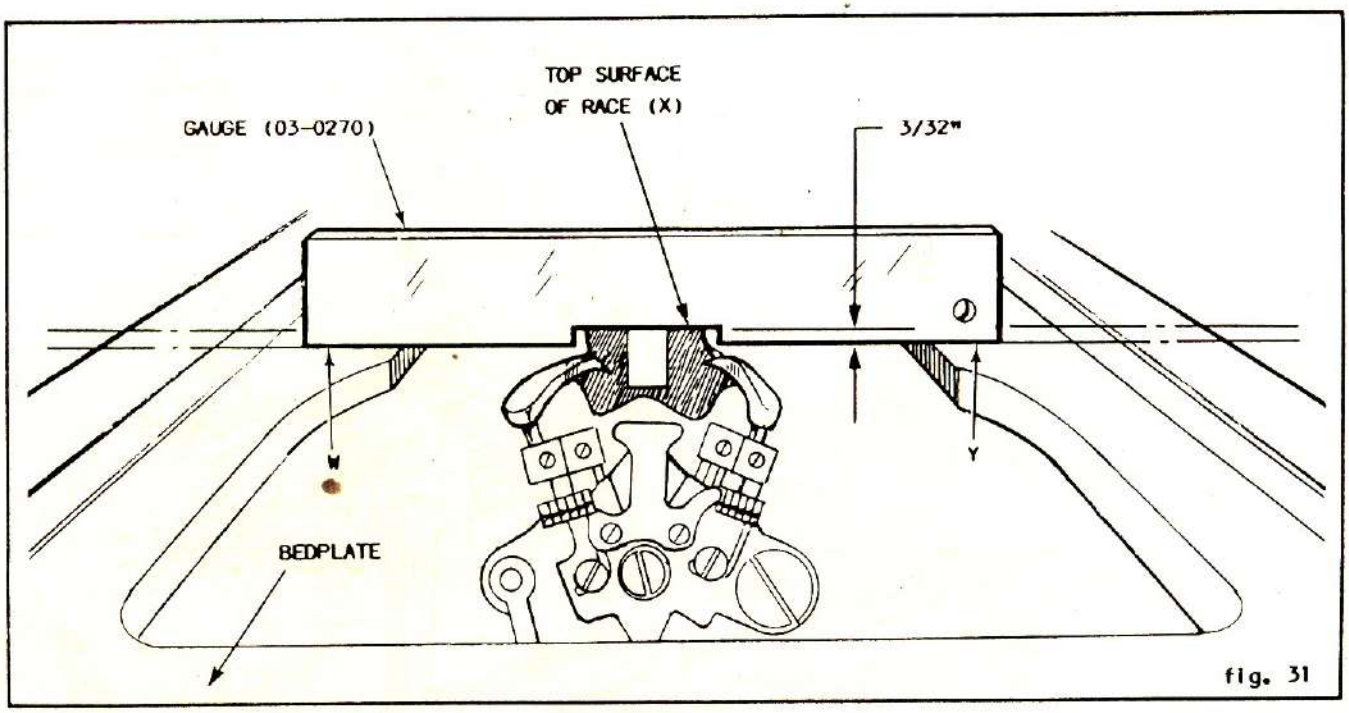

fig. 31

CUTTING SPACE

On Cut-After machines the cutting space, or distance between the two banks of stitches, must be wide enough so that the knife will not cut the stitches. The ideal width depends upon the materials used and the appearance wanted. (Thin fabrics generally require less cutting space, while heavier fabrics require more).

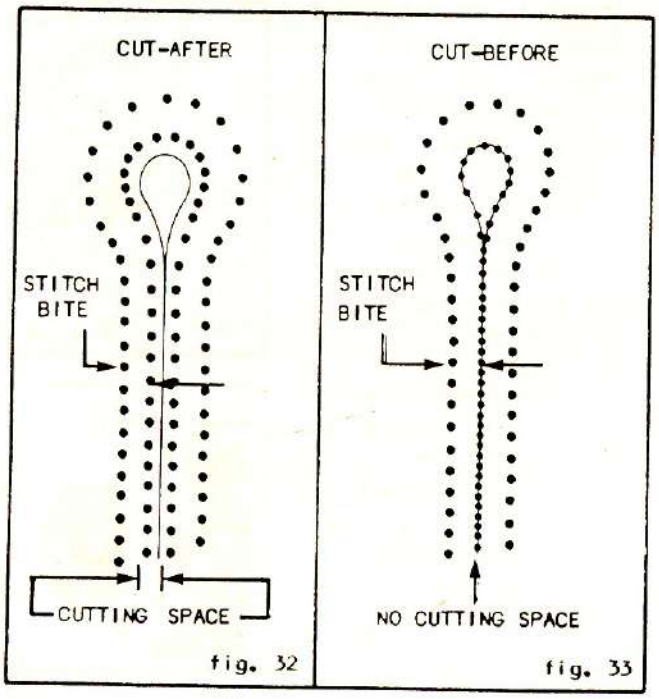

fig. 32 fig. 33

To adjust: loosen screw (A) with a 1/4" wrench. Move screw and barrel clockwise to decrease, and counter-clockwise to increase cutting space. Tighten screw.

On Cut-Before machines there should be NO cutting space. The center stroke of the needle must fall directly inthe center of the cut. To obtain accurate adjustment clamp a sheet of paper on the bedplate. Crank the machine slowly along the straight side of the buttonhole while bringing the needle down on tis center stroke to make periodic small punch marks in the paper. Repeat this procedure on the other straight side of the buttonhole.

All center punch marks will fall in a straight line if the cutting space is accurately set. Procedure for adjusting is otherwise the same as that for a Cut-After machine.

STITCH BITE

The stitch bite or distance between the two points of entry of the needle as it vibrates should be sufficient to cross over the gimp without striking it. The ideal width depends on neatness and the type of material.

To adjust: loosen nut (B) and move drag link down to increase stitch bite. To decrease, move up. Tighten nut. Standard bite = 3/32".

ANY CHANGE IN THE CUTTING SPACE OR STITCH BITE REQUIRES THE ADJUSTMENTS OF THE LOOPERS BE CHECKED.

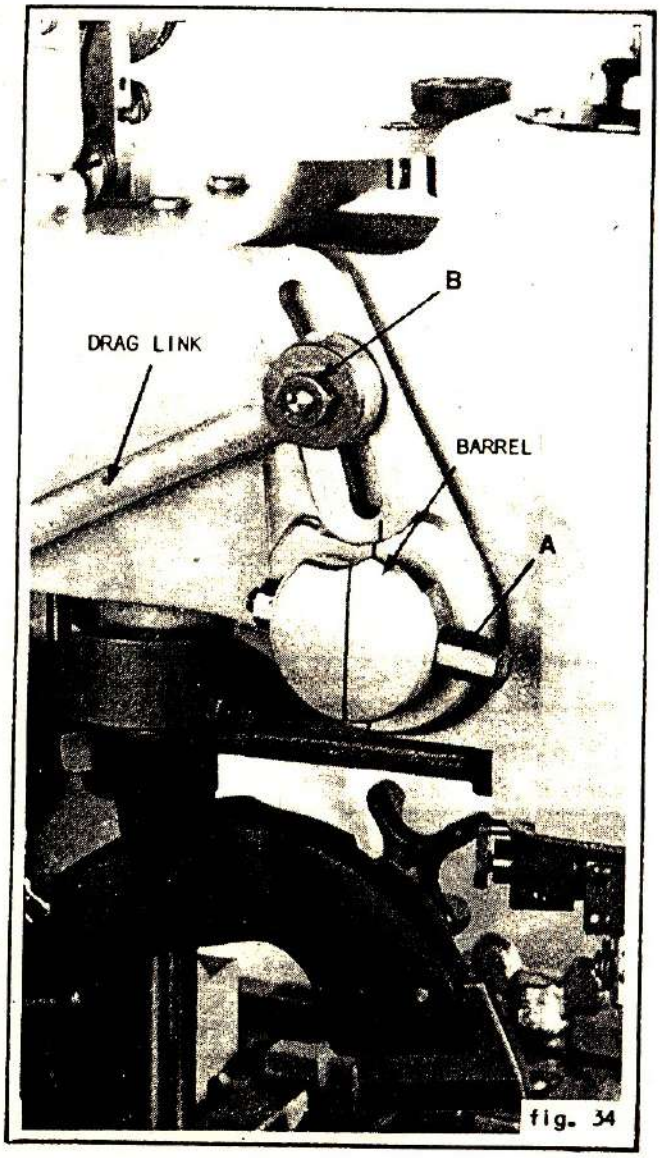

fig. 34

NOTE: For servicing thread tensions refer to section on Threading.

LOOPER ADJUSTMENT

LOOPER TO NEEDLE ADJUSTMENTS

To examine or correct the looper to needle adjustments remove the clamp plates and the throat plate. Turn the left side crank until the stitch wheel unlocks. Turn the stitch wheel counter-clockwise.

TIMING

As the needle bar rises 3/32 inch from its lowest position, on either the center or vibration stroke, the following relationship between the needle and each looper should exist: The leading edge of the looper should be on the center line of the needle and the center of the eye of the needle should be approximately 3/32 inch below the looper.

NOTE: These specifications are standard for most thread and materials.

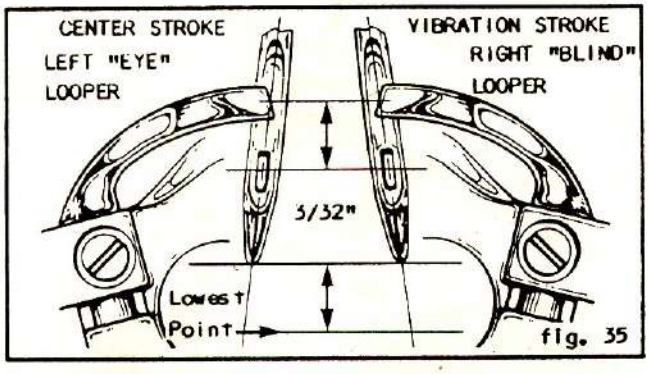

fig. 35

The needle bar rise on either stroke may be measured by applying a scale at the needle bar cap.

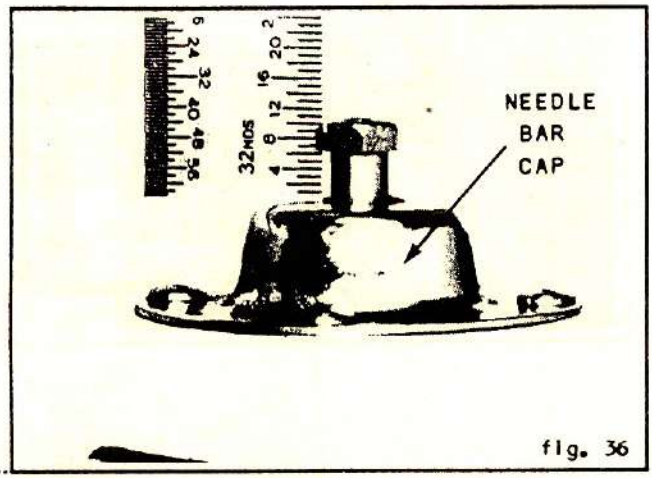

fig. 36

If, in a needle rise of 3/32 inch, one looper is "early" and the other is "late" they must be "equalized" by loosening screw (E) in the lower race and moving the crosshead "up" or "down" as required.

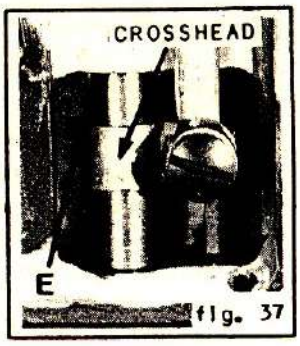

fig. 37

To obtain accurate equalization all "up" and "down" play must be removed from the split collar yoke. Sidewise movement in the split collar must be maintained or a bind may be created as the race turns around the eye, causing stitches to pile up.

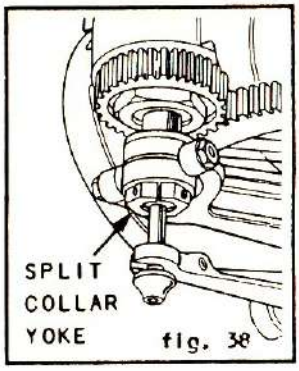

fig. 38

If, a needle rise of 3/32 inch, both loopers are too "early" or too "late" decrease or increase the loopers equally by loosening screw (F) and turning core using spanner wrench (03-0011).

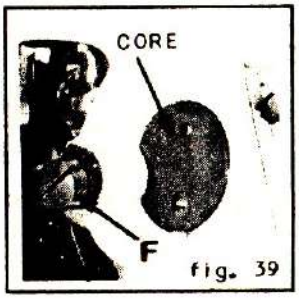

fig. 39

When the loopers have been correctly equalized and timed, check the position of the needle eye below the looper. This should approximate 3/32 inch if not, loosen screws (G) and raise or lower the needle bar as necessary.

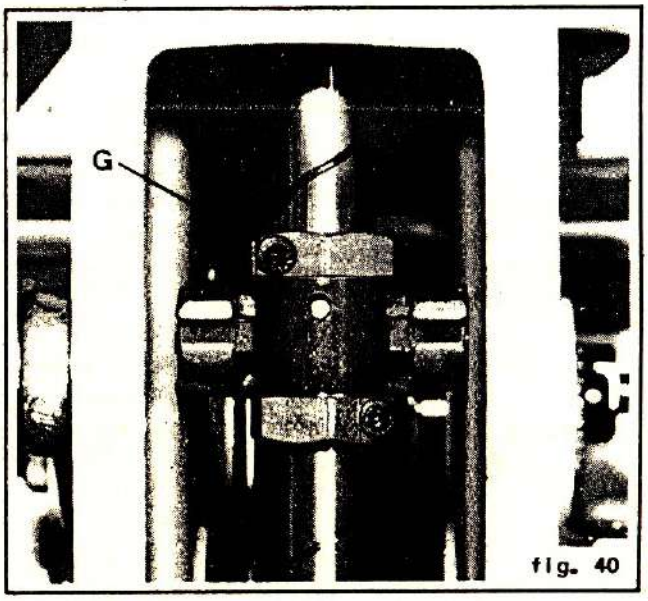

fig. 40

NEEDLE CLEARANCE

When a needle has risen 3/32 inch on either stroke, the needle-to-looper clearance should be as close as possible without touching (.005 max.). Loosen set screw (H) and adjust.

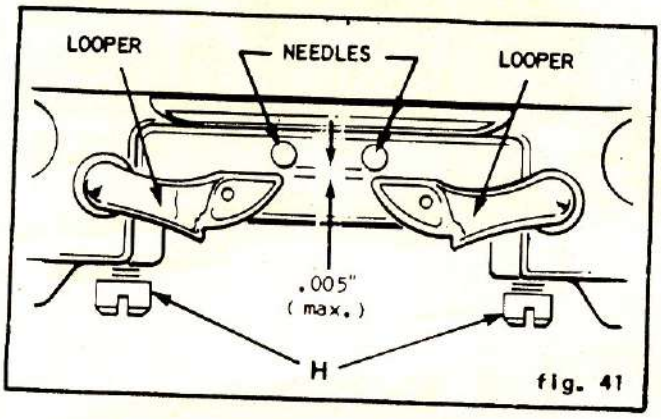

fig. 41

SPEADER ADJUSTMENTS

SPREADER STOPS - When the needle bar is at its lowest point neither spreader will be in contact with the spreader wedge. Both spreaders should be held by tension of the springs and the spreader stops as shown.

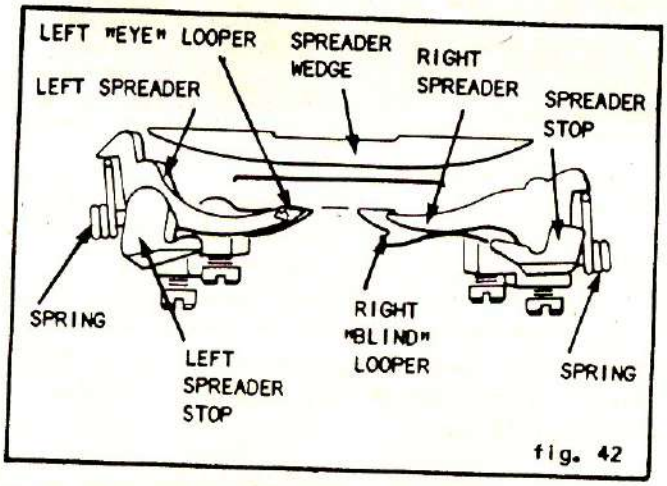

fig. 42

Set the left spreader stop so that the fork of the left spreader straddles the eye in the looper and the inner face of the Left spreader is flush with the corresponding inner face of the left looper.

Set the Right spreader stop so that the inner face of the Right spreader is flush with the corresponding inner face of the Right looper.

Check the action of both spreaders to assure that they do not bind against the top surface of the loopers or the spreader stops.

The position of the descending needle on each stroke as the loopers and spreaders are backing away is shown (fig. 45). It is important that the space (J) between the needle and spreaders is equal on both sides. The left hand spreader should be adjusted first and the right hand spreader bent to match. Left hand spreader should have clearance over looper thread. Right spreader should ride top of the looper without binding.
Adjust spreader wedge timing with nut (K) on connection (L).

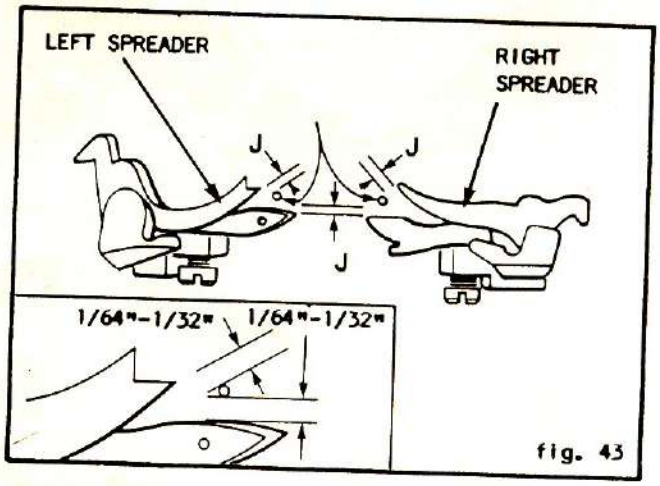

fig. 43

When the limit of adjustment provided by connection (L) is obtained, additional adjustment is provided as shown. Loosen screw (M) and raise or lower crosshead. The crosshead must not be allowed to bottom on the casting in any part of its stroke. After moving the crosshead adjust again as in Fig.61.

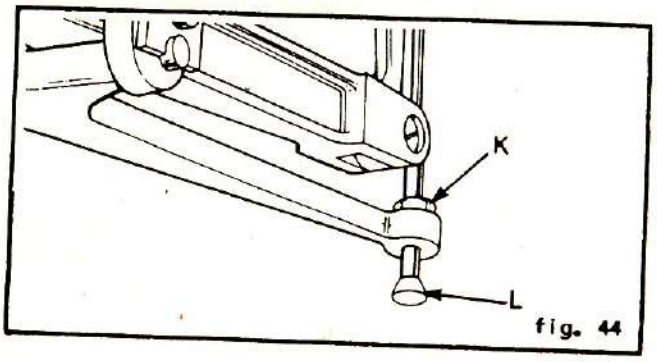

fig. 44

If the spreader wedge or spreader spindle are unduly worn it will be difficult to make the above adjustment correctly and these parts should be replaced.

Spindle upper end should extend just 1/32" above crosshead to eliminate any thread groove from forming on aluminum crosshead.

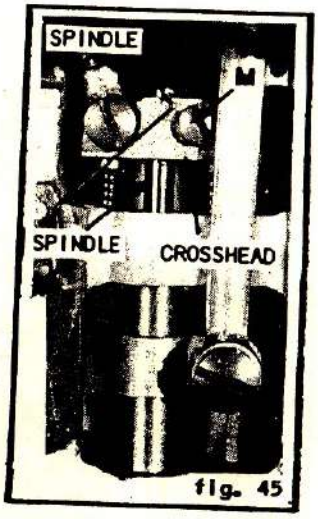

fig. 45

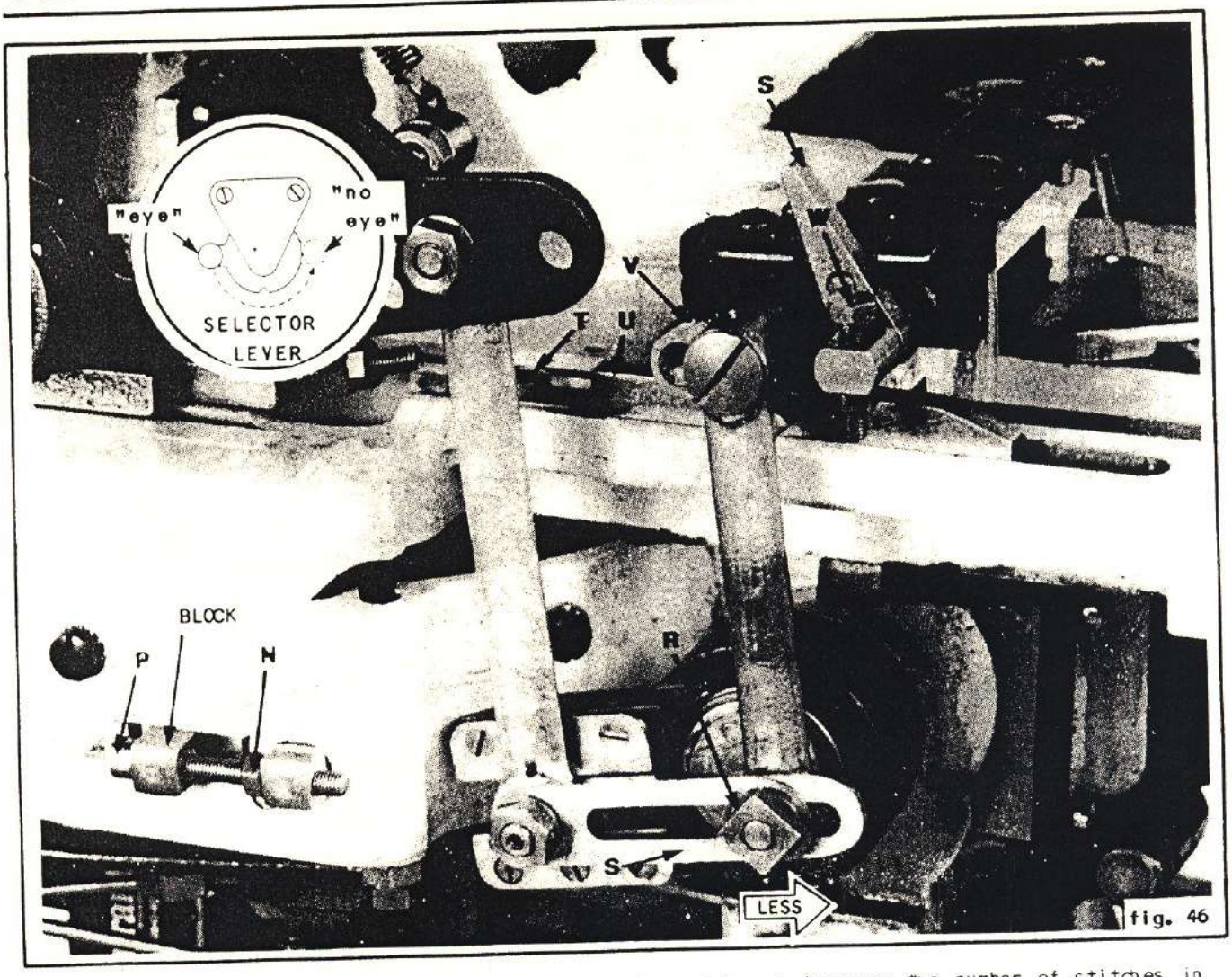

fig. 46

To increase or decrease the number of stitches on each side of buttonhole, first check button and rear support adjustments as described on page 1/14.

Worm shaft collar should be adjusted by loosening screw (Q) and reset collar to compress spring washer one-half way. Retighten screw (Q).

STITCH PER INCH (Stitch Density)

To increase or decrease the number of stitches throughout the buttonhole: loosen nut (R) and move link (S) as indicated to obtain more or less stitches per inch.

fig. 47

To retain or decrease the number of stitches in only the eye portion of the buttonhole:
No Eye Buttonholes - Change selector lever on bedplate to the "No Eye" position. Move lever (S) to the "No Eye" position. Loosen screw (T) and move the decrease wedge (U) forward so that roll (V) will descend the beveled portion of the wedge while the race is turning and the "No Eye" is being stitched.

Eyelet End Buttonholes - Change selector lever on rear of bedplate to the "Eye" position. Move lever (S) to the "Eye" position. Adjust stop screw (W) to limit the descent of roll (V) while the eye is being formed. The desired number of stitches in the eye is obtained by the adjustment of stop screw (W).

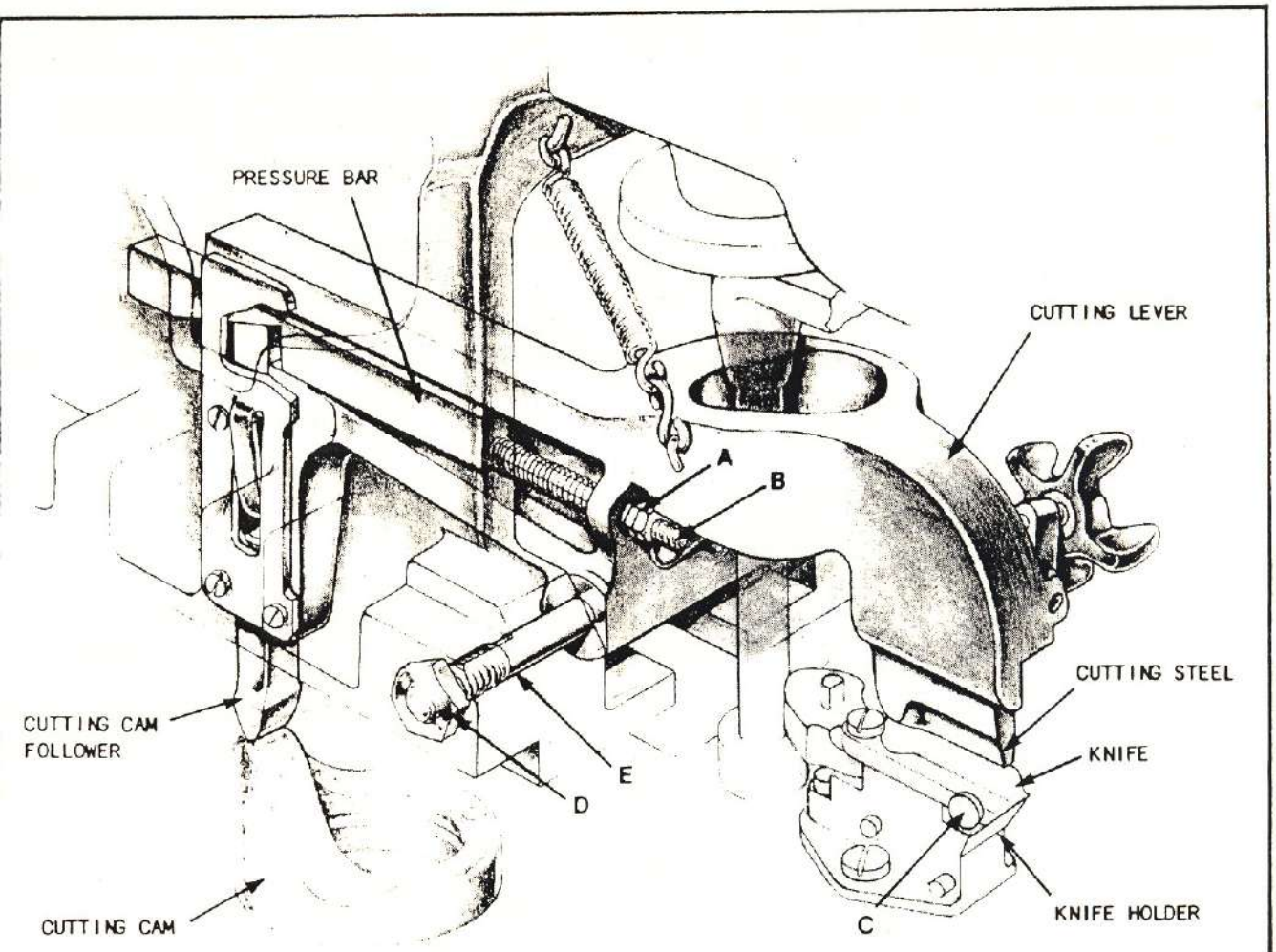

fig. 48

First consideration in cutting is the pressure of the cutting steel upon the knife.

The knife must be aligned to the cutting space and then the cutting steel is aligned to the knife.

The straight edge of the knife (on all machines) must be centered in the cutting space. The appearance of the eye is enhanced if the eye cut is made slightly forward (toward operator) with respect to the stitching around the eye.

CUTTING PRESSURE

Hand crank the machine through one cycle to determine the cutting pressure. The greatest cranking effort is when cutting occurs. If there is difficulty in hand cranking the machine through the cutting position, remove pressure by loosening lock nuts (A) and turning screw (B) counterclockwise to relieve pressure and clockwise to increase pressure as necessary. Retighten nuts.

LOCATING THE KNIFE

The position of the knife holder on the cam case is set. Further adjustment is possible, but seldom required.

Precise alignment of the knife to the cutting space can be obtained with the use of a "pricking" needle (02-0001) and a piece of kraft paper clamped in sewing position. (A "pricking" needle is much shorter than a regular needle and is used to provide a pattern of needle punctures in the paper.)

The machine is now cycled under power and the location of the knife cut, with respect to the cutting space, is easily seen. To reposition the knife, loosen screws (C). Retighten screws to hold the knife in correct position.

Centering the knife in the cutting space can also be accomplished by hand cranking the machine through its cycle. A standard needle is employed and when the stitch wheel unlocks it can be turned to bring the needle "down" and "up" on its center stroke, making visible puncture marks on paper clamped in place. By periodically repeating the puncture marks, a definite cutting space pattern is formed.

LOCATING THE CUTTING STEEL

The cutting lever should be adjusted so that the impression of the knife will be centered on the cutting steel. Back off cutting pressure and check visually for match up between the block and knife.

By holding lever (F) raised for a short period, and pressing starting lever, the machine will quickly make one complete cycle under power without stitching. Remove the cutting steel and examine the impression made by the knife.

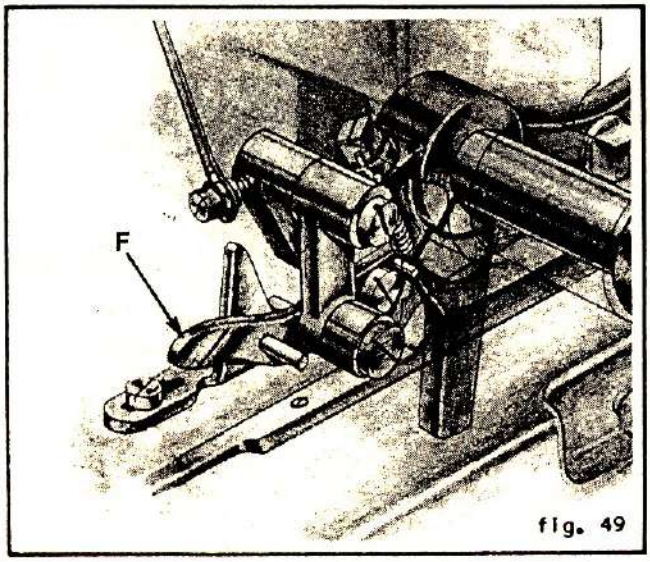

fig. 49

Loosen nuts (D) and adjust screws (E) to locate the cutting steel so that the knife blade impression will be centered on the steel. Before tightening the nuts check to see that all side play is removed from the cutting lever.

MAKING A CLEAN CUT

The knife impression made on the cutting steel must be distinct and complete. If only a partial impression is seen either the knife edge may be broken (dull), or the surface of the cutting steel is uneven. If the knife edge is at fault, replace the knife. If a new knife does not produce a complete impression, remove the cutting steel and file the high points as indicated by the impression.

Final proof of clean cutting is determined when the buttonhole is produced in the garment. It may be necessary to add some cutting lever pressure. Under no circumstances should cutting lever pressure be allowed to exceed that amount which can be applied by hand cranking the machine through its cycle.

If unable to obtain adequate cutting pressure by adjustment, the cutting cam follower or the cutting cam may be badly worn. Before replacing either of these parts, first try a new cutting steel and knife.

When the stitching ends, continuing rearward travel of the bedplate causes wedge (A) to strike trip lever (B) and continues beyond wedge.

This causes shaft (C) to revolve, pulling the actuator (D) down. Trimming actuating arm (H) located beneath the head of the actuator is likewise pulled down rotating the knife to the right. The smooth rounded side of the knife brushes one leg of the thread as it passes.

As trip lever (B) continues beyond wedge (A) and is released, the actuator (D) rises quickly to release the knife which springs back to the left, cutting the front leg of the thread loop (fig. 53).

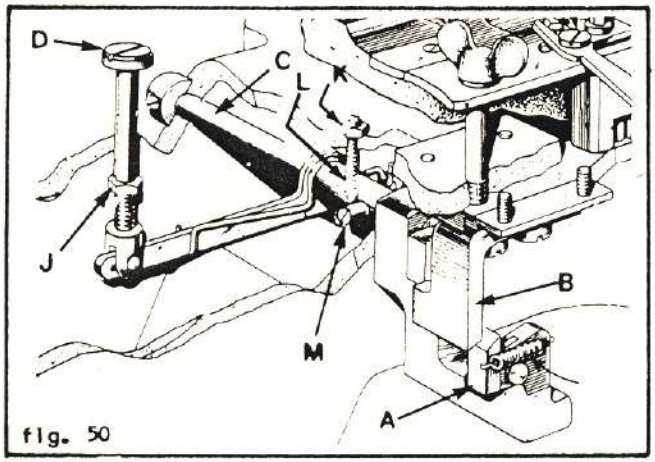

fig. 50

To check the following adjustments, the machine must be cranked to the point where the stitching ends and the race faces rearward. The stitch wheel will be locked. Continue to crank slowly until the operation of the actuator can be observed.

TRIMMING KNIFE ADJUSTMENT

The knife should be set so that it clears the underside of the throat plate and the top of the right spreader stop. The tip of the blade should extend rearward to coincide with the rear face of loopers so that it will pass by the needle without striking it. To adjust, loosen screw (G) and move knife holder up or down as necessary.

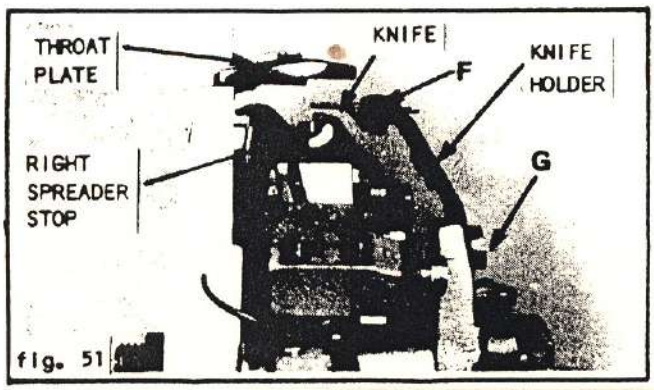

fig. 51

ACTUATOR ADJUSTMENT

With actuator fully extended, there must be slight clearance between the under side of the actuator (D) and the trimmer operating arm (H).

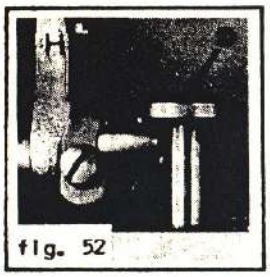

fig. 52

When the actuator has of its own action, fully depressed the end of the trimmer holder (H), the extreme point of the knife should be in line with the eye looper. Further travel of the knife may cause the lower looper thread to be trimmed. To adjust, loosen nut (J) and turn actuator up or down as necessary. The actuator must operate freely at all times.

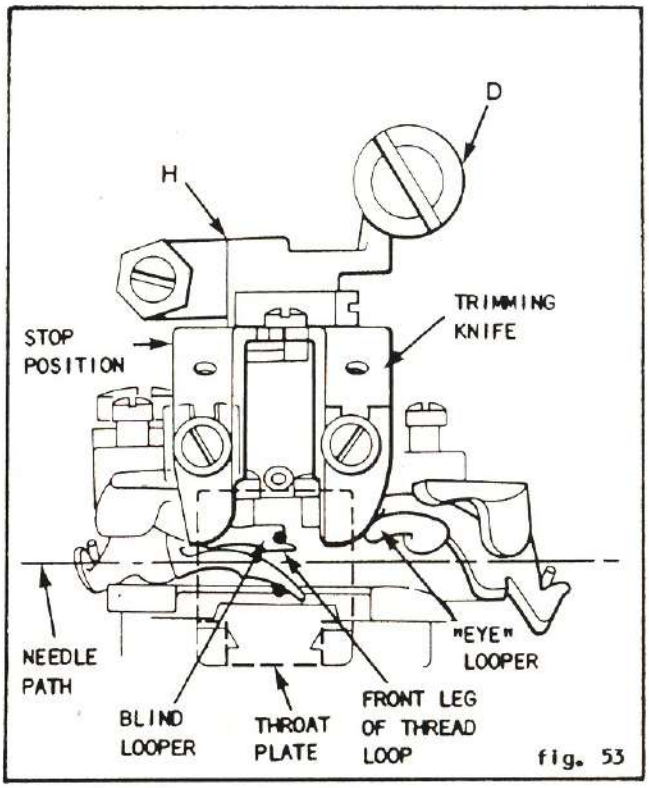

fig. 53

KNIFE STOP POSITION

The stop position of the trimming knife governs the extent of movement at the point of trimming. The cutting edge of the knife should advance sufficiently beyond the shoulder of the blind looper to assure full engagement and constant trimming of the front leg of the thread loop.

When the actuator (D) has risen to its full height, the knife should be, at **MINIMUM**, in an advanced position to clear the slot in the throat plate. To adjust, loosen nut (K) and turn screw (L) counterclockwise for **MAXIMUM** movement while maintaining some clearance between the underside of the actuator (D) and trimmer operating arm (H).

UPPER THREAD DRAW-OFF

On Cut-After machines, a thread draw-off cam, turning with the upper sector shaft, pivots the rocking tension assembly forward while the race is turning to form the eye. When the stitching ends, the race reverses allowing the rocking tension to fall back and release additional slack thread for starting the next buttonhole.

On Cut-Before machines, the cycle ends with the race still facing backward and the tension assembly rocked forward. At the beginning of the next buttonhole, the race turns immediately. The tension rocks backward and additional slack starting thread is provided.

To obtain MAXIMUM starting thread, stop the machine at any point after the eye has been completed and while stitching the second side of the buttonhole.

Loosen two screws (A) and position the thread draw-off cam so that the rod (B) is at the top of the rise. To decrease the amount of thread draw-off, adjust the position of the cam as required in the direction of arrow marked "less".

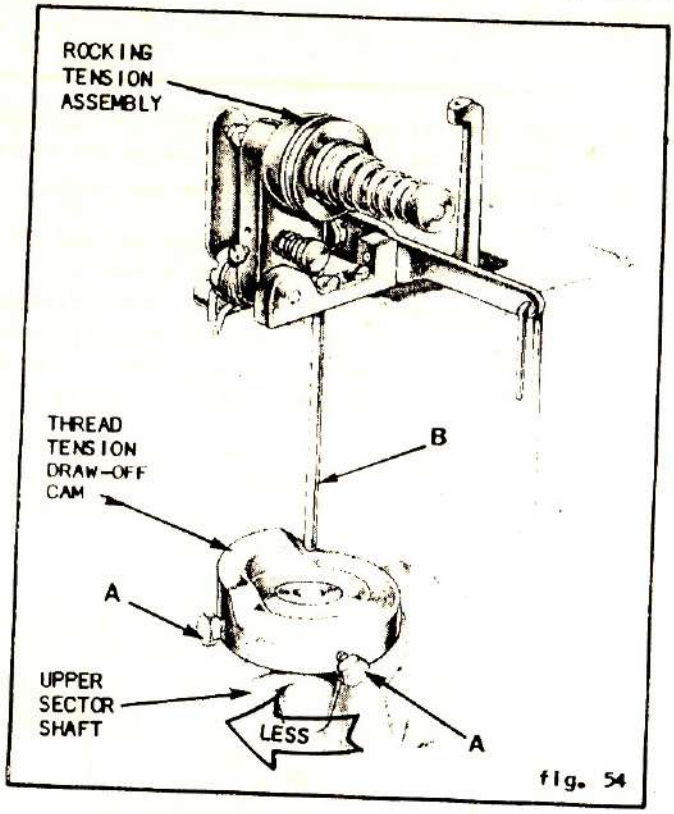

fig. 54

HOLD DOWN FINGERS

The hold down fingers function is to hold the work while cutting of the thread takes place.

To adjust pressure of material or work piece, loosen nut (A) and adjust screw (B) to obtain desired pressure. Pressure on material or work piece should be sufficient to hold material but not too much to bind machine.

Height of hold down finger can be adjusted by loosening nut (C) and turning screw (D) to obtain proper height.

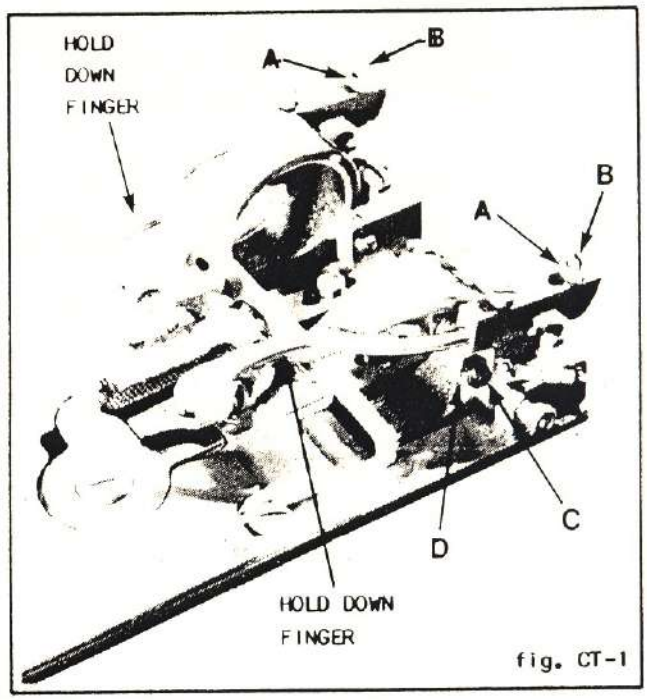

fig. CT-1

THREAD TRIMMER AND THREAD RETAINER

Upper Thread Trimmer is activated by a wedge located on the main cam. Movement of thread trimmer should be delayed as late as possible to allow thread pickup hook to be in position to pickup trimmed top thread.

Knive should be set to clear front of needle and bottom of throat plate. Also check that knife clears top of spreaders (see thread trimming adjustment page 1/21).
Knife should be set to clear front of needle and bottom of throat plate. Also check that knife clears top of spreader.

Knife should be installed and adjusted so that it trims thread on the return stroke.

Thread retainer should be set below the top surface of the throat plate and set lightly against the front of the throat plate. Thread retainer, in its home position, should be to the right of the thread slot. When the trimmer is activated, thread retainer wipes across the thread slot and captures thread for next cycle.

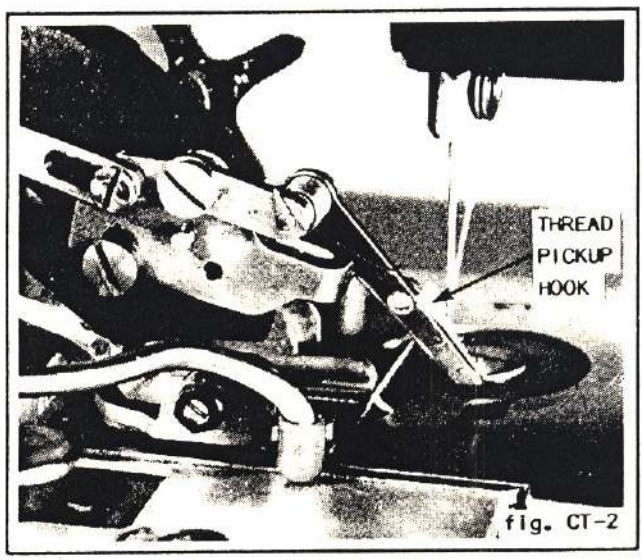

fig. CT-2

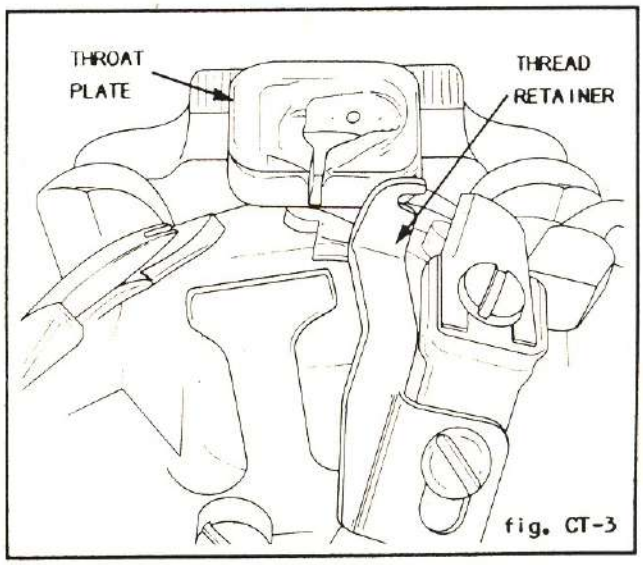

fig. CT-3

TOP THREAD PICK-UP

The thread pick-up hook is actuated by the downward movement of the cutting lever.

Hand crank machine through its entire cycle and observe thread pickup hook as it makes its downward plunge. Pickup hook should not hit clamps or material. To adjust, loosen pivot screw (E) and swing plate (F) on its fulcrum (G) to obtain desired results. Retighten pivot screw (E).

Center "V" of thread pickup hook should line up with needle center line. This adjustment is made by bending the thread pickup hook left or right with a pair of long needle nose pliers.

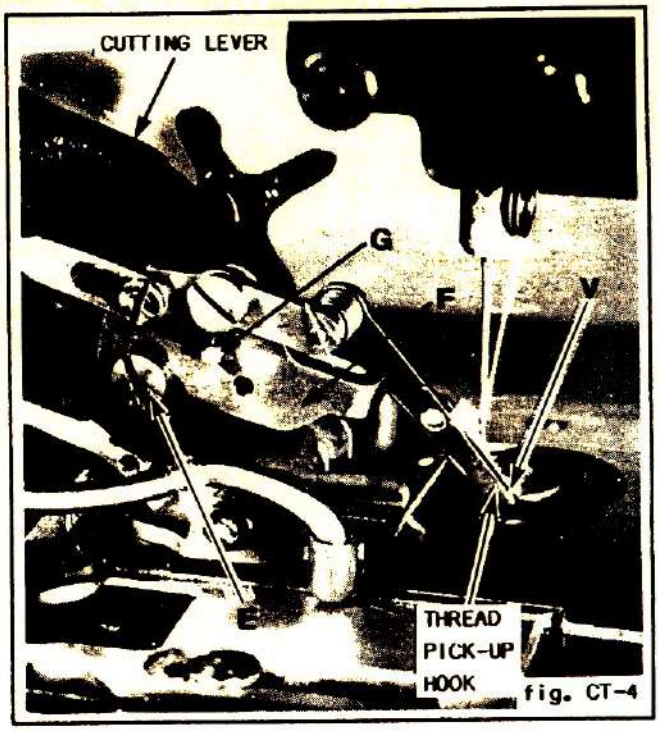

fig. CT-4

GIMP PULL BACK

A gimp pull back is provided to insure that there is enough gimp to start the next buttonhole.

Spring (H) acts as clamp and a tension on gimp. To adjust, remove yoke (J) by pressing inward on pin (K).

Adjust spring (H) by loosening screw (L) and position spring (H) until its top edge is slightly under top of gimp hole. Gimp should slide through hole, but without being able to move back.

Weight (M) pulls gimp back through hole in throat plate at the end of cycle. To adjust length of starting gimp, loosen screw (N) and adjust stop (P) to obtain desired results.

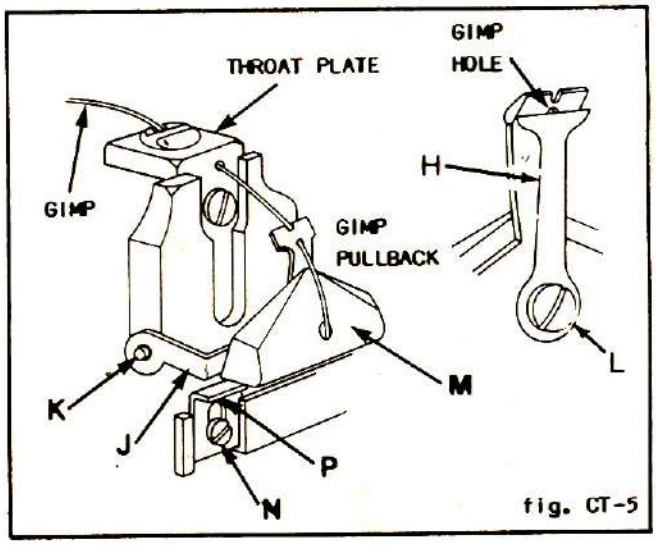

fig. CT-5

STITCH INCREASE WEDGE

The stitch increase wedge is used to add or remove stitches in the buttonhole eye. Loosen screw (R) and move wedge forwards towards front of machine for additional stitches and toward the rear for less stitches.

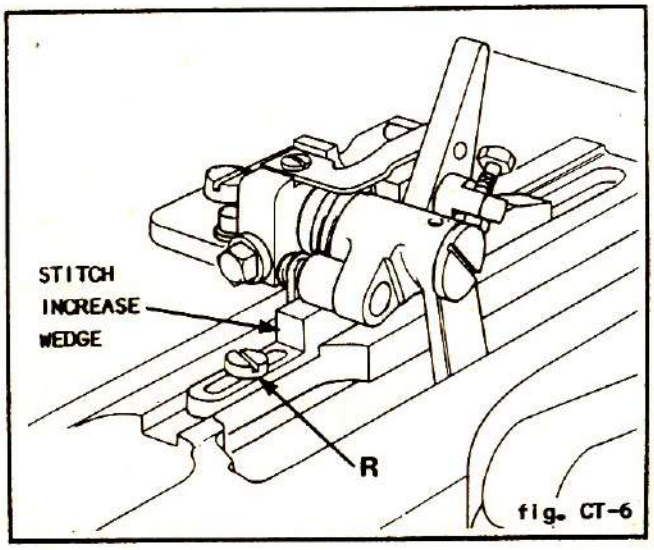

fig. CT-6

Adjustments effecting buttonhole characteristics such as spreading, stitch bite and cutting space requires no special instructions for this model. The objective is to make such adjustments satisfactory to both Cut-After and Cut-Before work going through the machine so that no further adjustments are necessary once the operator makes the changeover.

CHANGEOVER PROCEDURE

In order to shift from CA to CB or CB to CA, the bedplate must be in its forward position when Selector Lever (fig. CB/CA) is clear to pivot.

Changeover is accomplished in two steps:

1. Move Selector Lever, (located at rear of machine head) to the CB position (clockwise) or to the CA position (counter-clockwise). See fig. CB/CA-1.

2. Set Clamping Arm (fig. CB/CA-4) in CA or CB position. Loosen screws (D) and (E) and slide Clamping Arm to the rear for Cut-After operation or all the way forward for Cut-before operation. Tighten screws (E) and then screw (D).

ADJUSTMENTS

CUT-AFTER STOP POSITION

With machine in Stop (bedplate all the way forward) position and clamps up, loosen and move nut (A, fig. CB/CA-2) along slot as needed to obtain 1/32" spacing between drive hub and left hand dog on left hand wheel (see fig. 7, page A6). Tighten nut (A). Run machine through cycle with latch in CA position, (fig. CB/CA 2) before making this adjustment.

CUT-BEFORE STOP POSITION

With machine in stop (bedplate all the way forward) position and clamps up, loosen screw (B, fig. CB/CA-3) and move block as needed to obtain 1/32" spacing between drive hub and left hand dog (see fig. 7, page A6). Run machine through cycle with latch in CB position before making this adjustment. Hold block squarely against side of machine head while tightening screw (B). Check setting of slotted stud (C). Stud should be aligned with clamp slot as shown. CA stop position adjustment must be complete before making this adjustment.

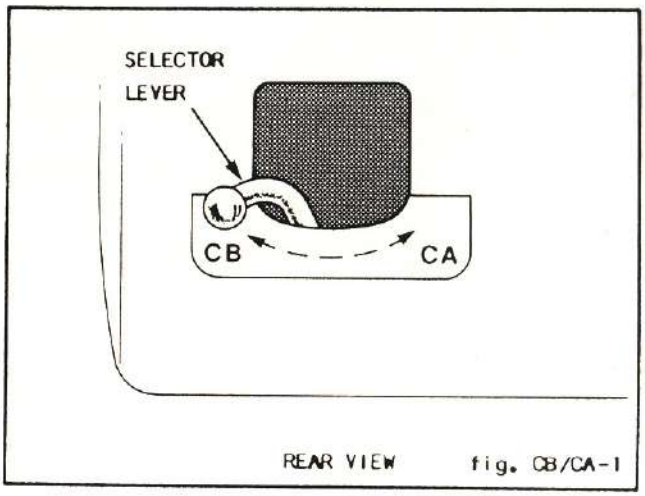

fig. CB/CA-1

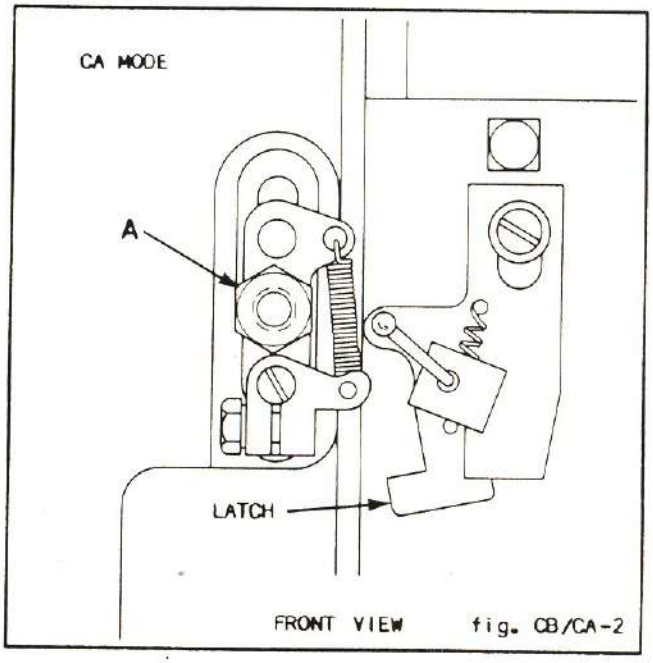

fig. CB/CA-2

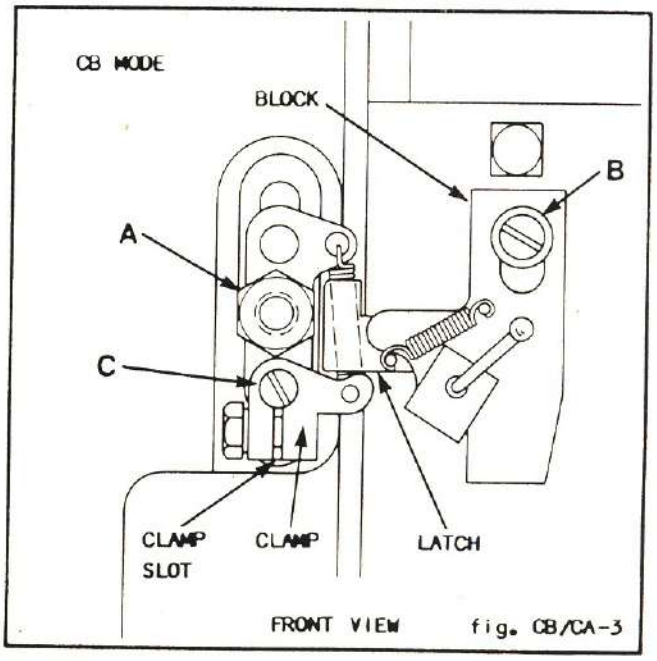

fig. CB/CA-3

UNCLAMPING

Unclamping is controlled by slide (fig. CB/CA-4) which serves as a two position stop (CA and CB) for clamping arm. To adjust slide, run machine with screws (D) and (E) loosened and with latch in CA mode (fig. CA/CA-2). Stop machine just before end of cycle while cutting lever is in motion but after bedplate has stopped in its forward motion. In this position, move clamping arm as needed so there is 1/64" clearance between clamping arm tip and toggle lever as shown in fig. CB/CA-4. Tighten screws (E) then screw (D) to lock slide in that position.

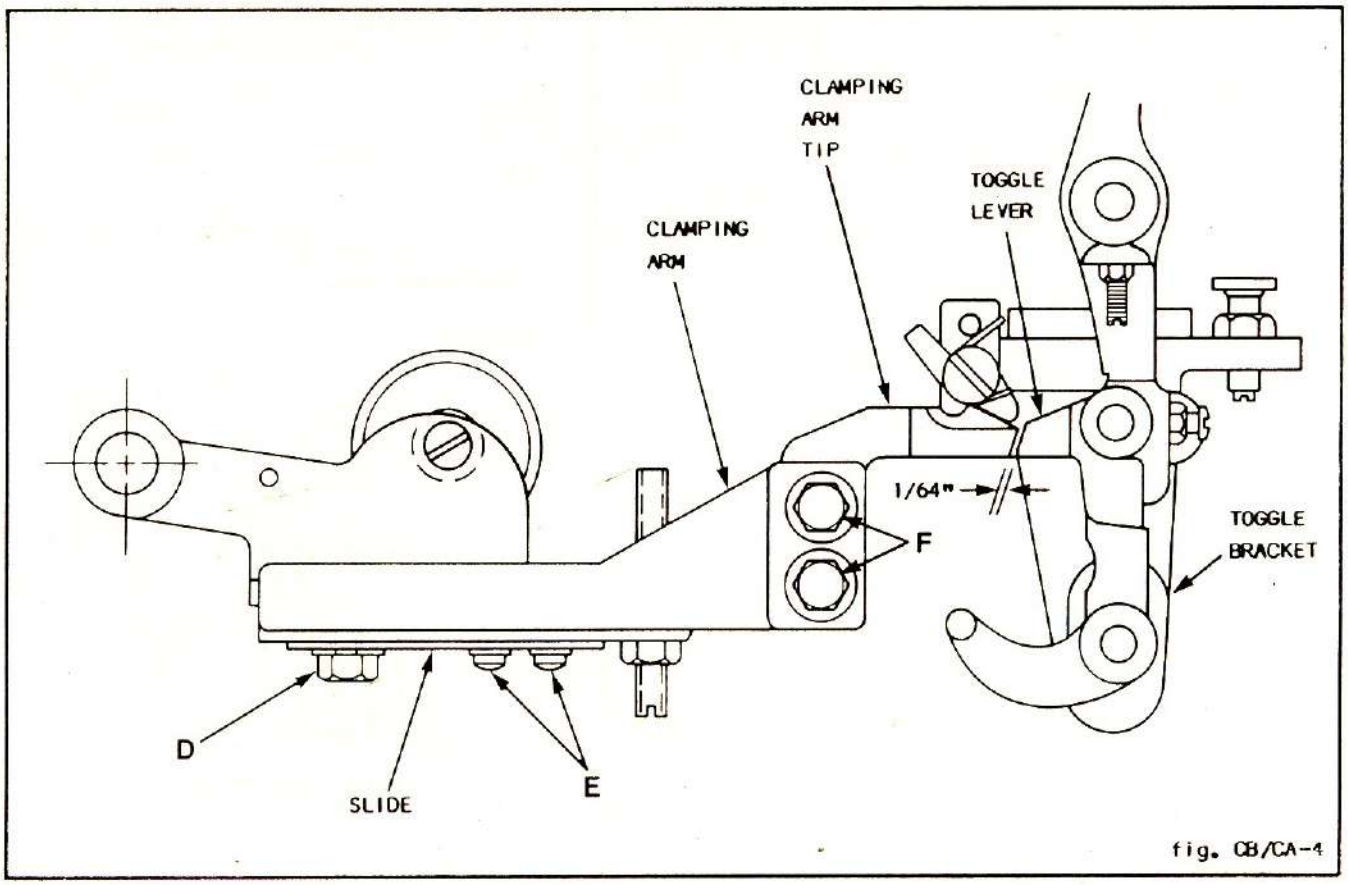

fig. CB/CA-4

CLAMPING PRESSURE

Adjust clamping pressure by loosening screws (F, fig. CB/CA-4) and positioning clamping arm tip up or down to produce a light toggle clamp force. Tighten screws (F).

If unclamping occurs in the Cut-Before mode after cutting but before sewing starts, adjust eccentric nut (G, fig. CB/CA-5) located behind screw (H). To adjust latch, loosen screws (H) and (J). Adjust eccentric nut (G) to raise or lower latch. Tighten screws (H) then (J). Check for ability to hand crank in both CA and CB modes.

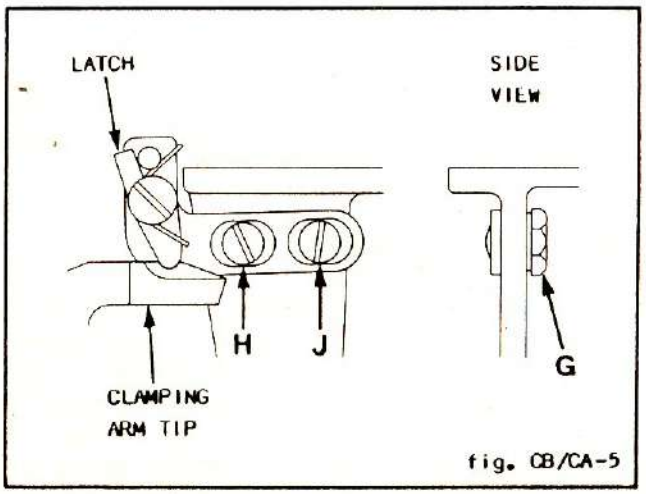

fig. CB/CA-5

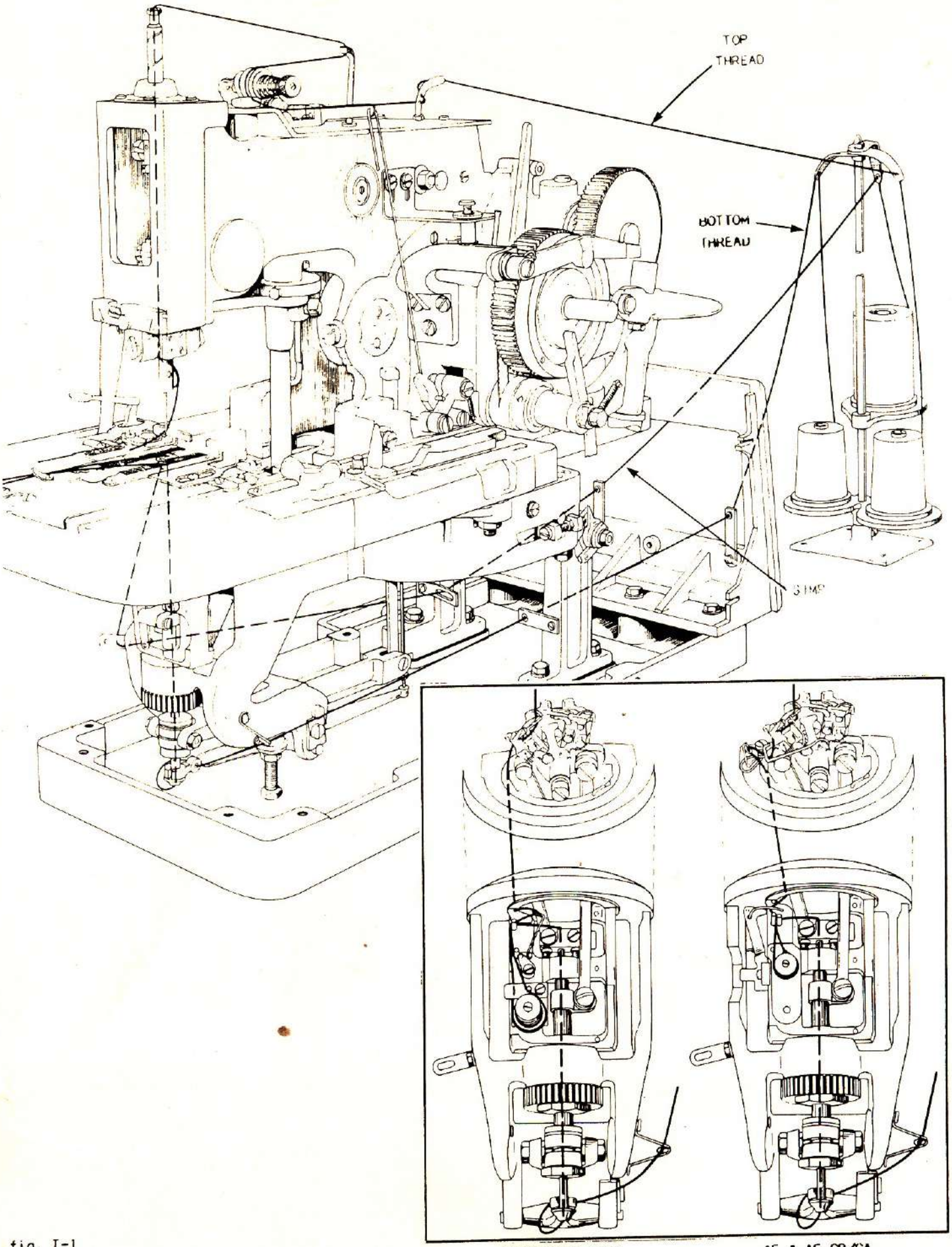

fig. T-1

LUBRICATION

Oil daily with a few drops of medium oil at all points indicated. Use Reece Oil (05-0090-0-000). Lubrication points are as marked with an arrow and on the machine with an Oil Decal or red paint.
With the cover closed, oil locations as shown on top plate, top cover and handwheel.

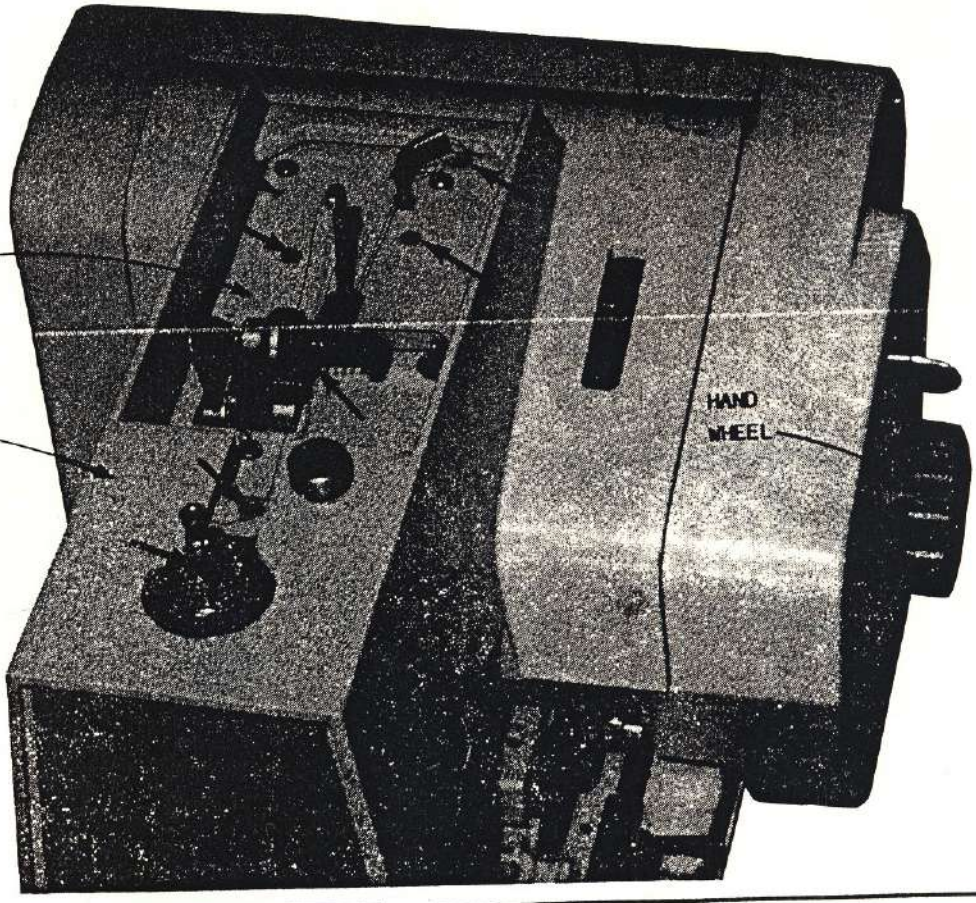

fig. L-1

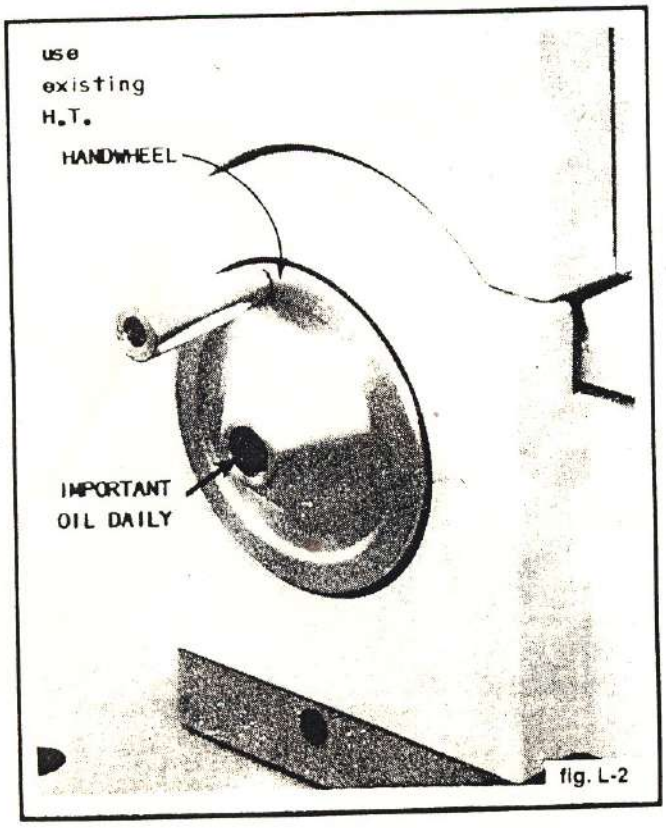

fig. L-2

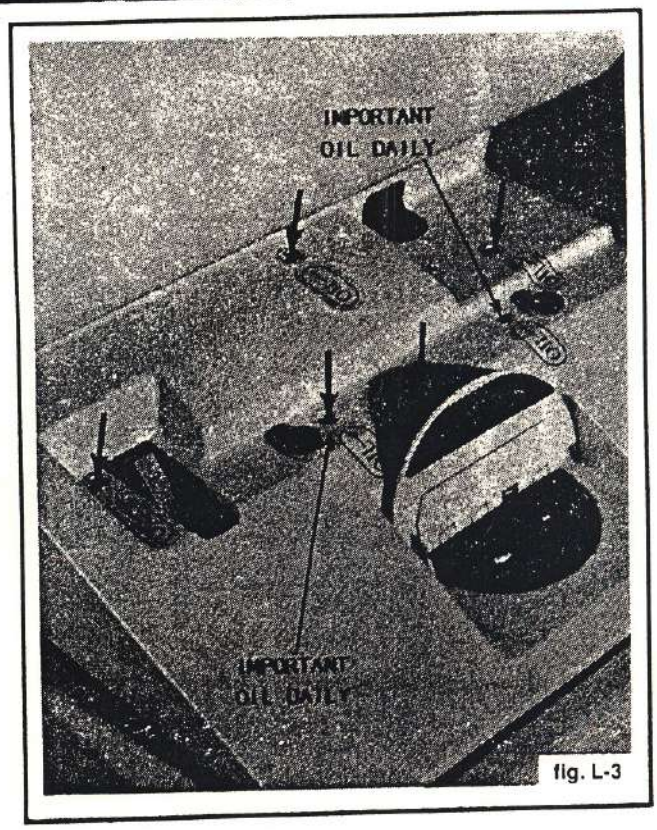

fig. L-3

Lift top center cover to latch position (or remove this cover by lifting forward). All additional oil points in sewing head are now accessible.

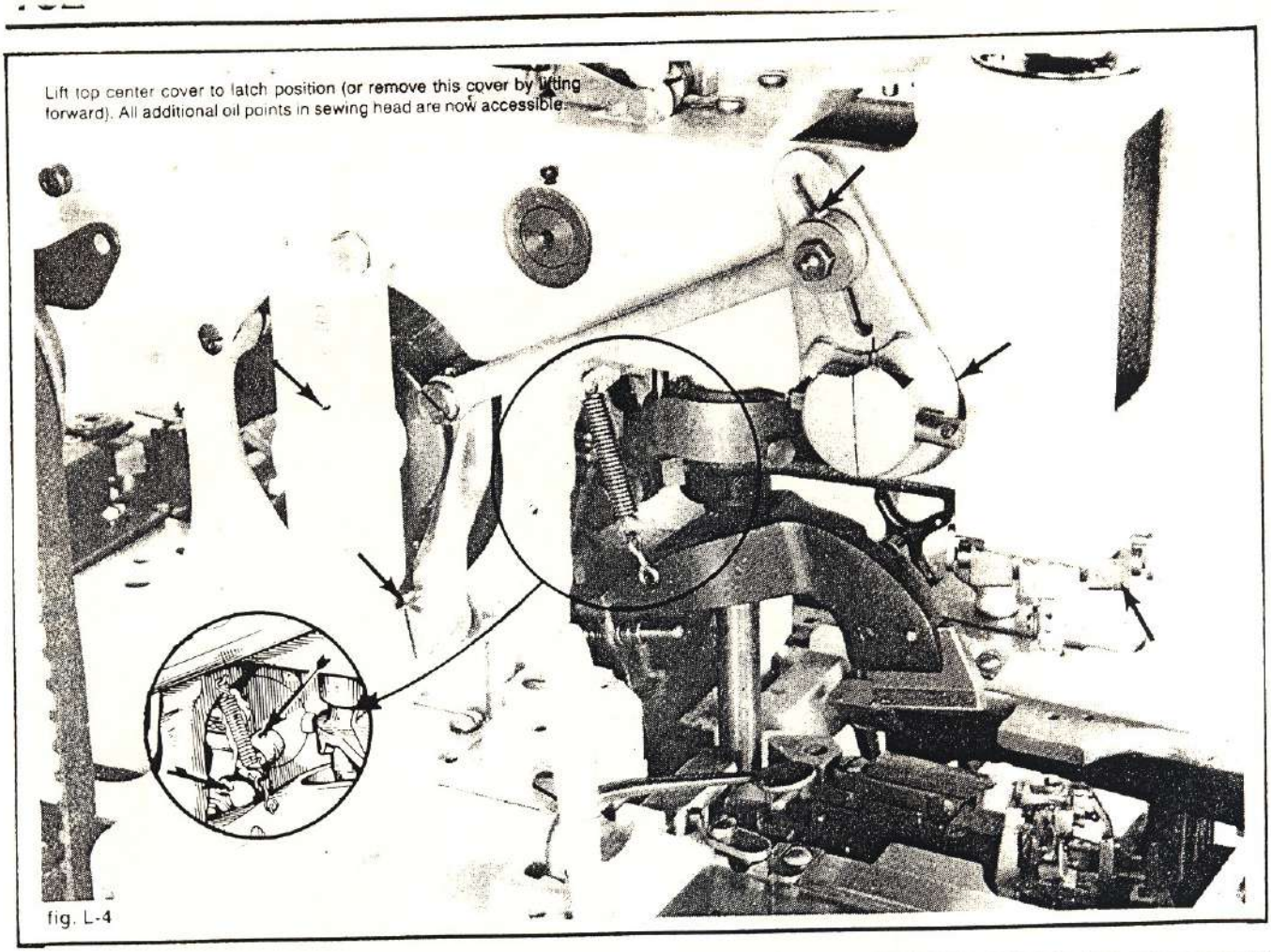

fig. L-4

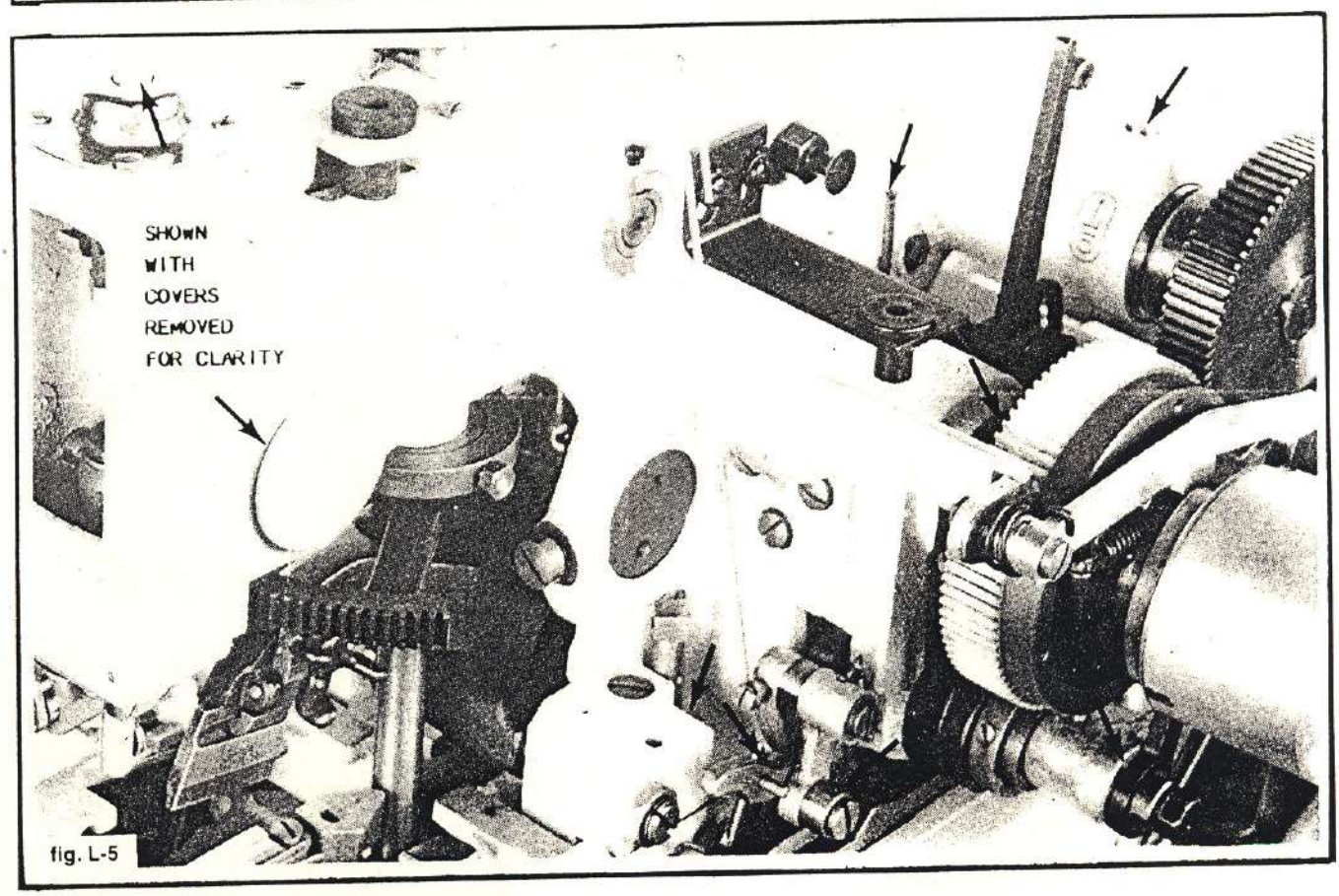

fig. L-5

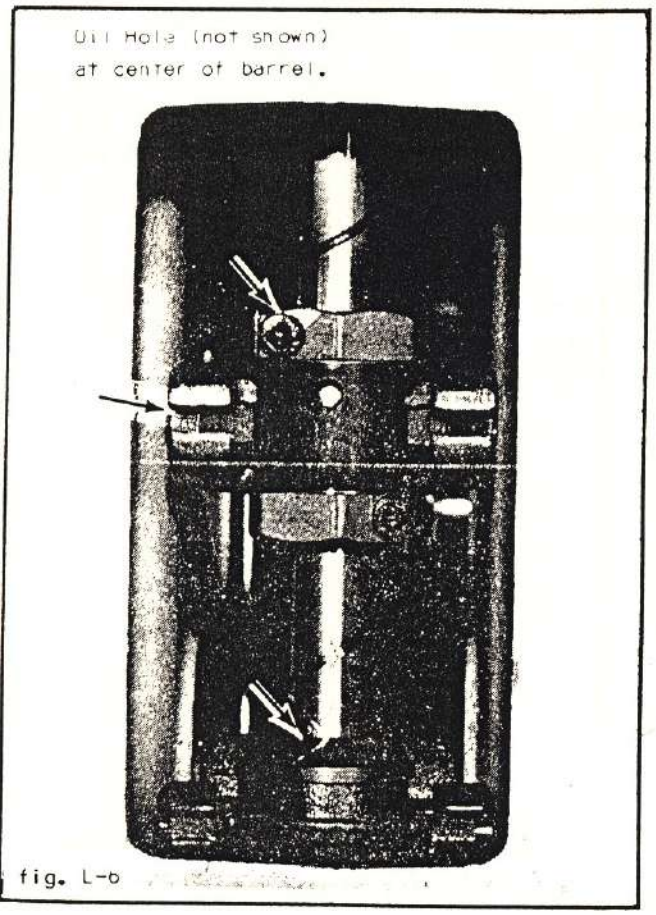

fig. L-6

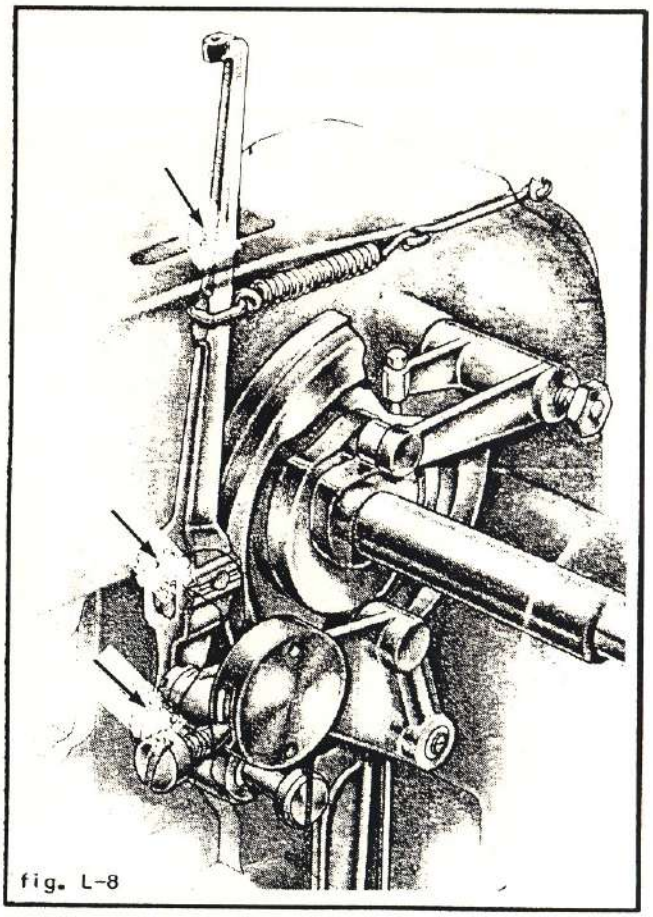
fig. L-8

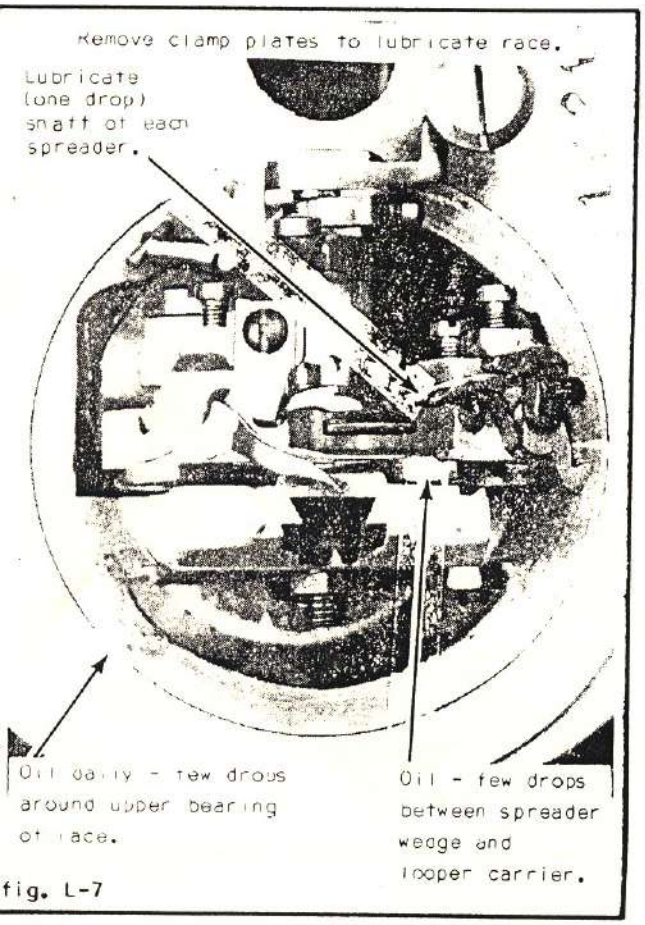

fig. L-7

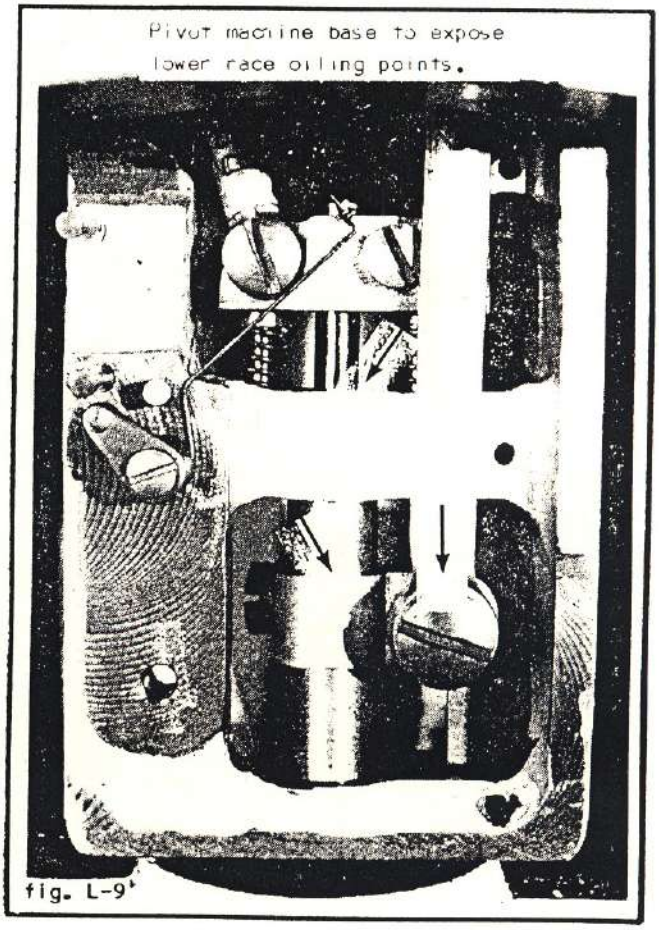

fig. L-9

Pivot machine in base to fully raised position. This will enable lubrication of all points in the machine base. It is not necessary to remove side covers to lubricate machine.

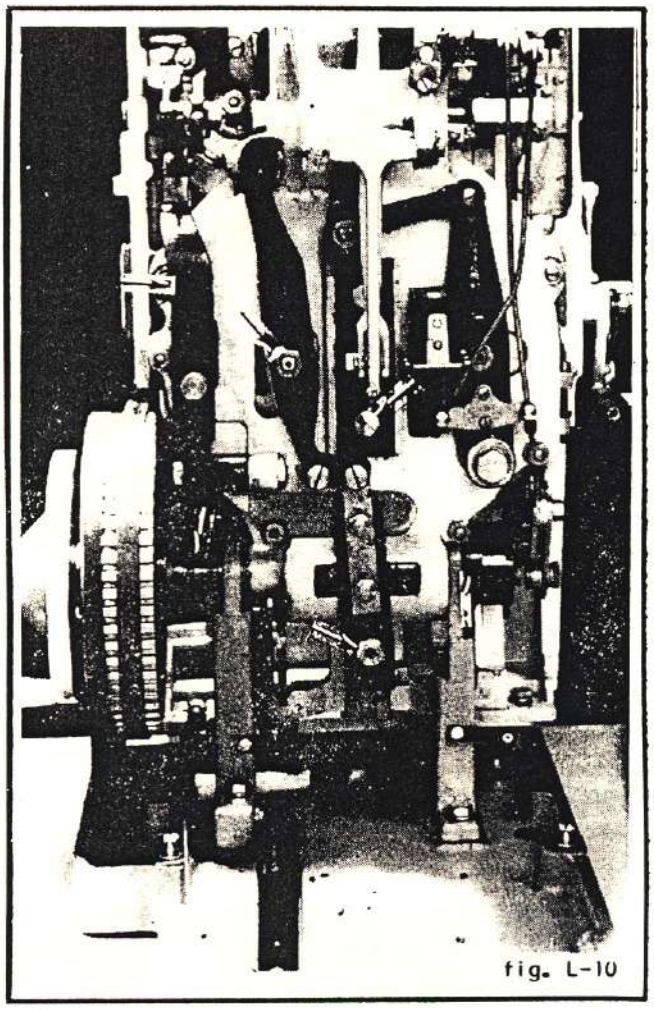

fig. L-10

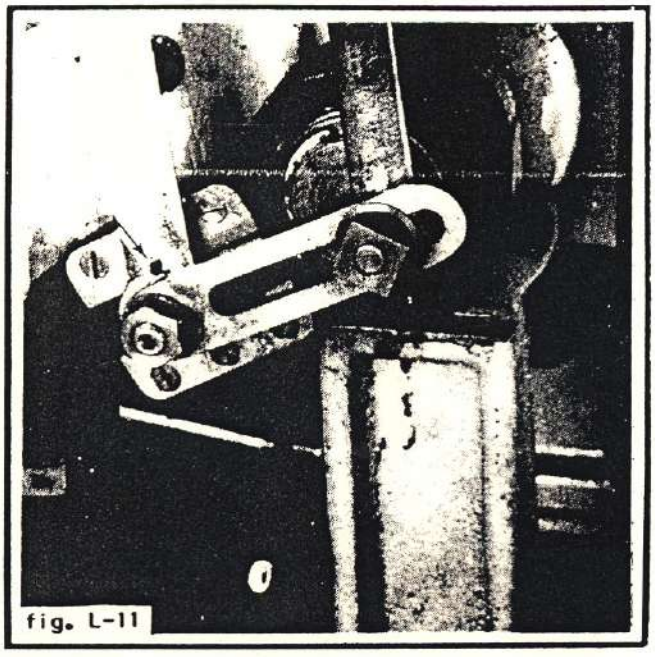

fig. L-11

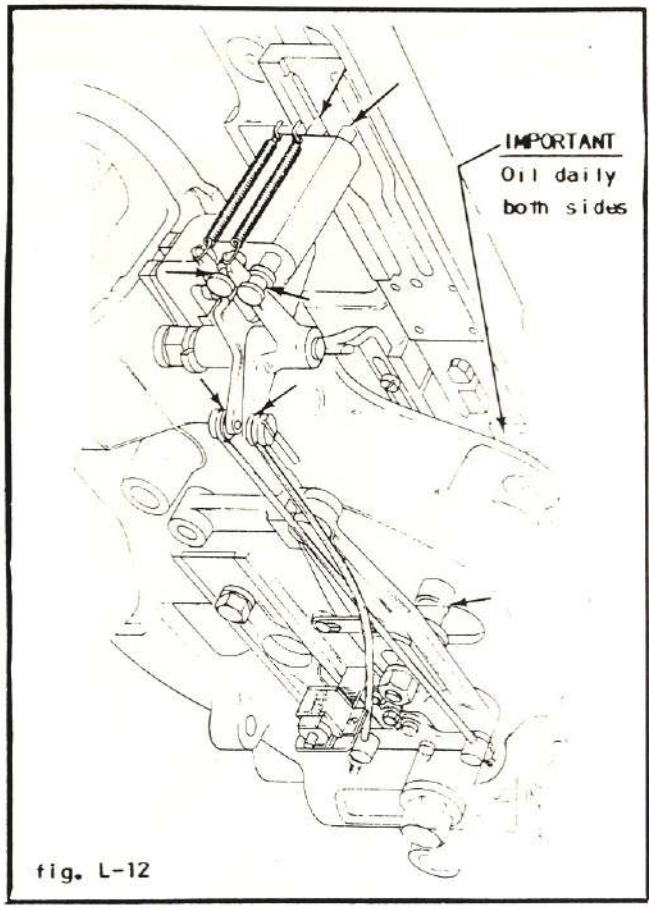

fig. L-12

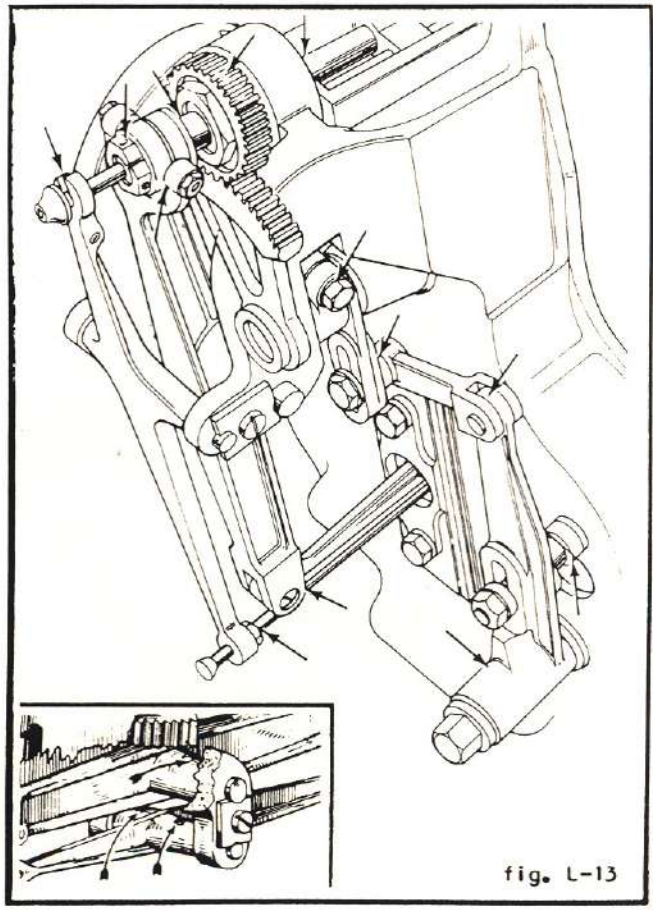

fig. L-13

LUBRICATION

The following areas require lubrication once or twice a week.

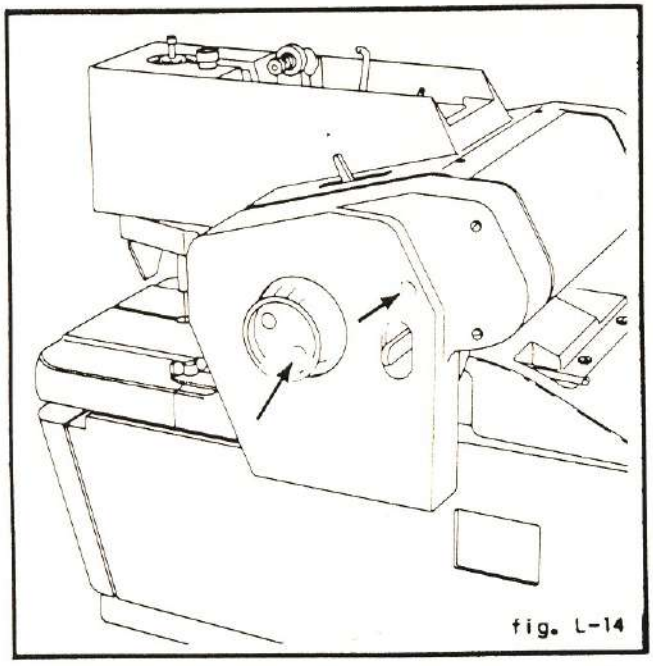

fig. L-14

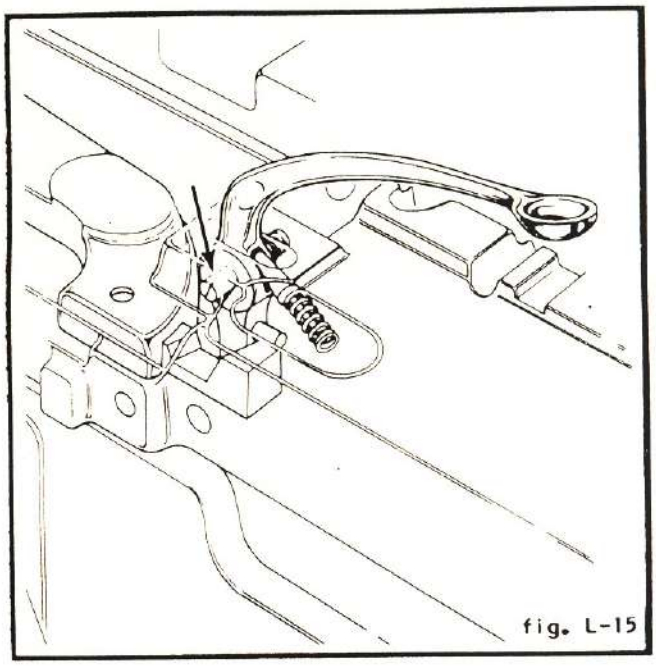

fig. L-15

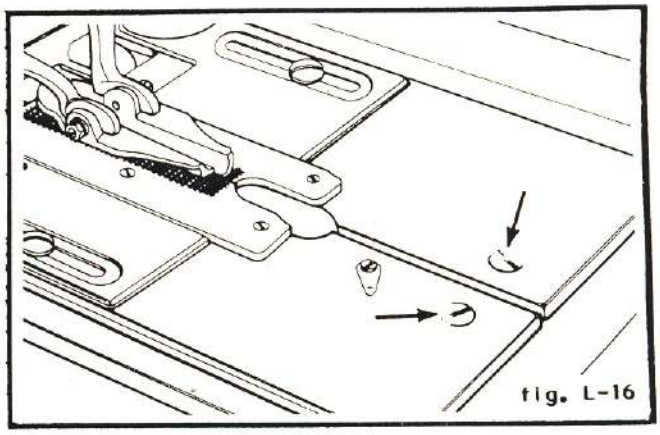

fig. L-16

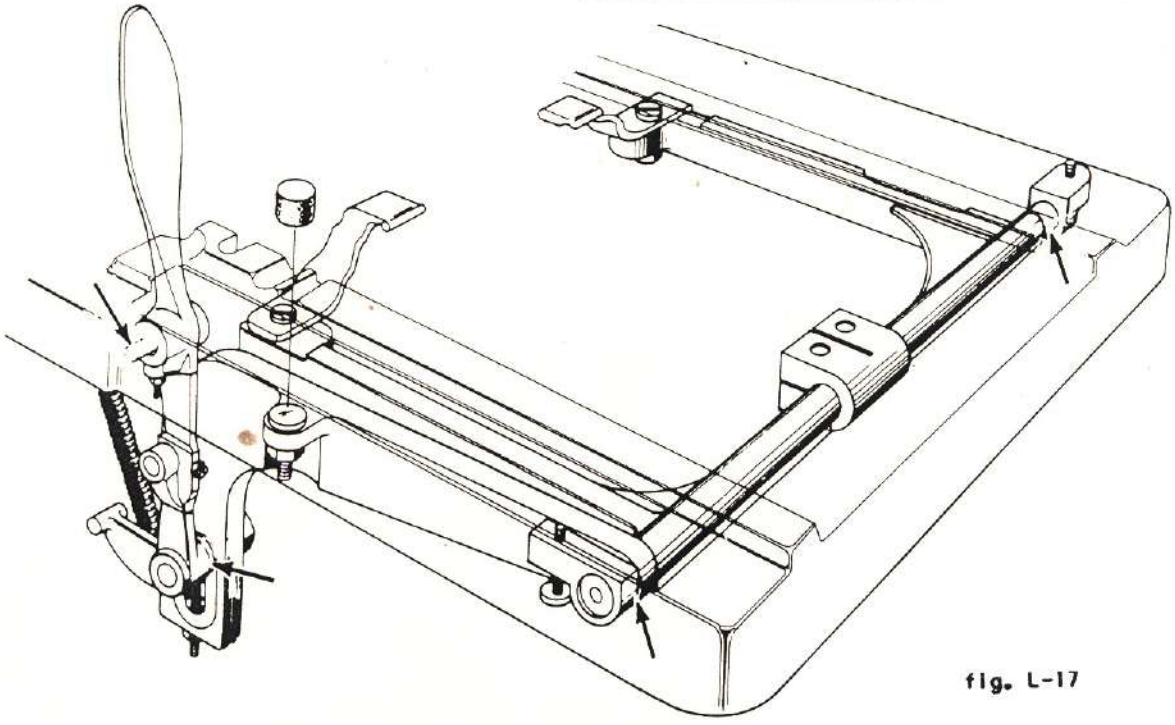

fig. L-17

REECE®

BUTTONHOLE MACHINES

series 103

MODELS

AF • CA • R • RE

AF • CB • R • FE

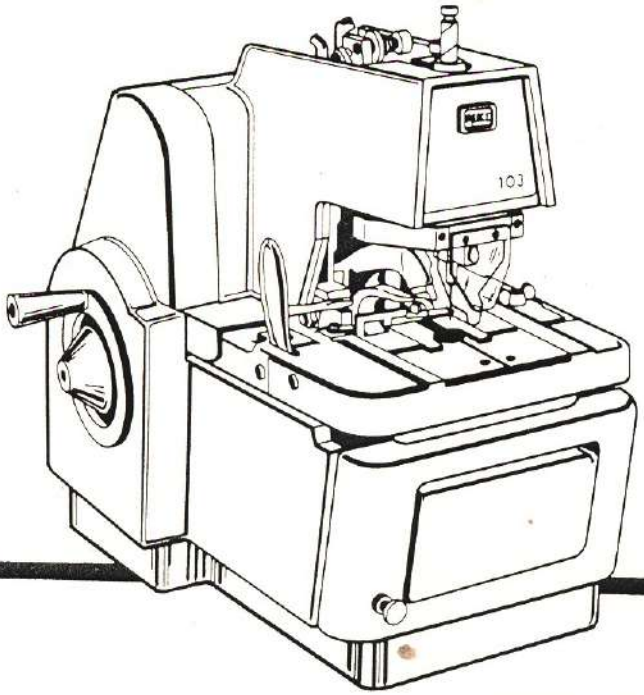

ILLUSTRATED PARTS SECTION

This section contains parts for Reece series 103 Adjustable Flybar models and also those parts considered basic to all Reece series 103 models. When searching for replacement parts for models other than the Adjustable Flybar, first refer to that section in this manual. Parts not listed there should be considered basic and will be found in this section of the manual.

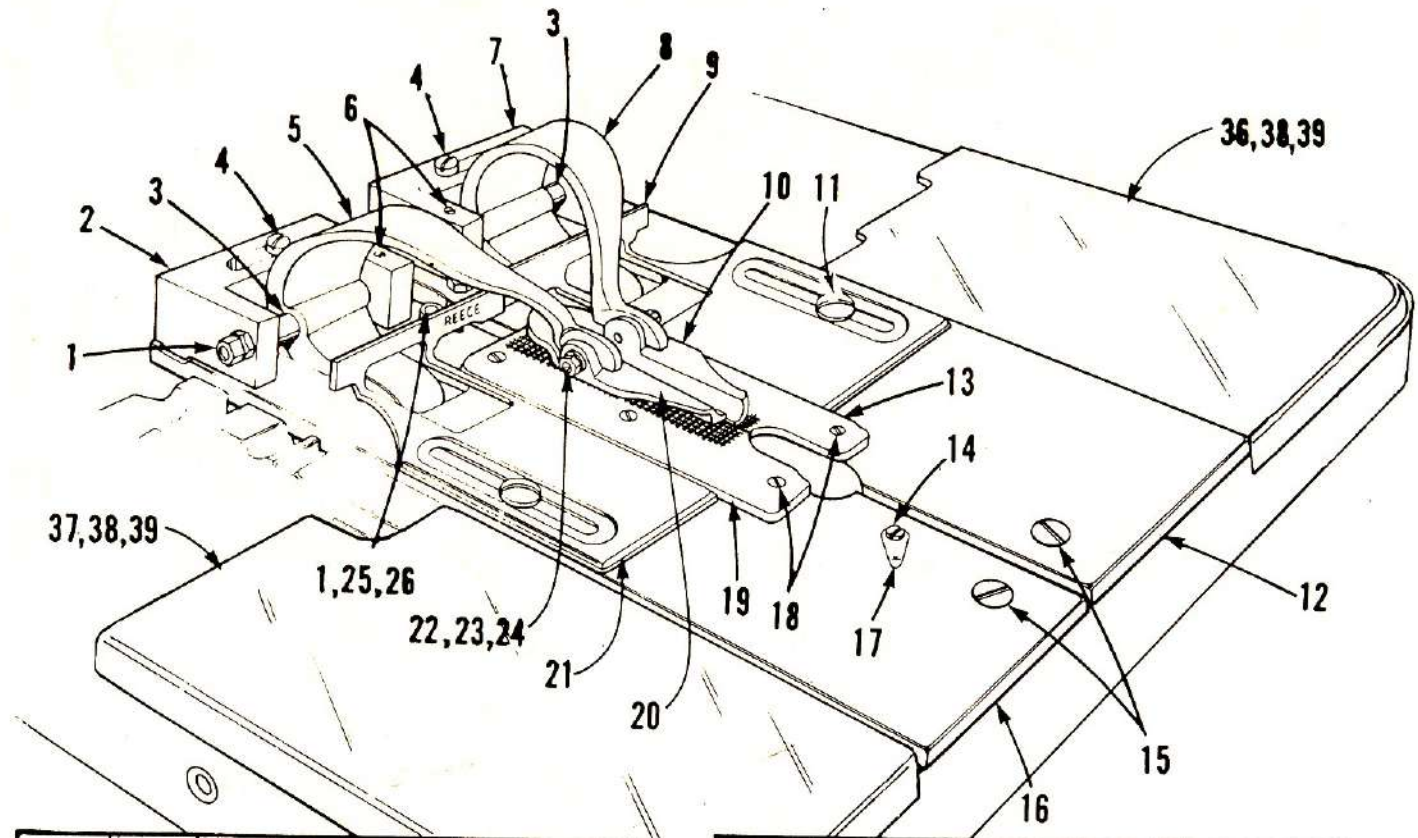

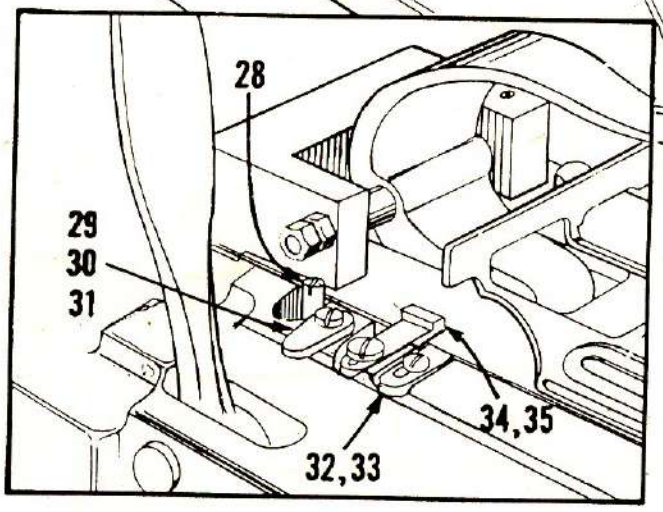

DET.	PART NUMBER	DESCRIPTION
1	01-3001	Nut
2	10-2049	Left Block
3	10-2053	Shaft
4	01-2051	Screw
5	10-2050-2-701	Clamp Arm, L.H.
6	01-2052	Screw
7	10-2045	Block, R.H.
8	10-2046-2-701	Clamp Arm, R.H.
9	10-2059	Cloth Gauge, R.H.
10	10-2046-1-751	Clamp Foot,R.H.
11	01-2111	Screw
12	10-2043-1-019	Clamp Plate,R.H.
13	10-2044-0-001	Clamp Mat,R.H.
	10-2044-0-002	Clamp Mat,R.H. (for B/CA) (for AF-CB-R-FE)
14	01-2053	Screw
15	01-1020-1	Screw
16	10-2047-1-019	Clamp Plate, L.H.
17	10-2054	Clip
18	01-2015	Screw
19	10-2048-0-001	Clamp Mat, L.H.
	10-2048-0-002	Clamp Mat, L.H.(for B/CA)
20	10-2050-1-750	Clamp Foot,L.H. (for AF-CB-R-FE)
21	10-2060	Cloth Gauge,L.H.
22	01-1137	Screw
23	01-3016	Nut
24	01-4038	Spring Washer
25	10-2051-2	Screw
26	10-2052	Roll
28	10-2042	Screw
29	10-2030	Screw
30	10-2029	Latch
31	01-5022	Spring
32	10-2032	Stop
33	01-2312	Screw
34	10-2031	Slide
35	01-2050	Screw
36	10-2001-0-003	Cover, R.H.
	10-2001-0-001	Cover, R.H.
37	10-2001-0-002	Cover, L.H.
38	05-1131	Adhesive
39	05-1132	Activator

CLAMPING

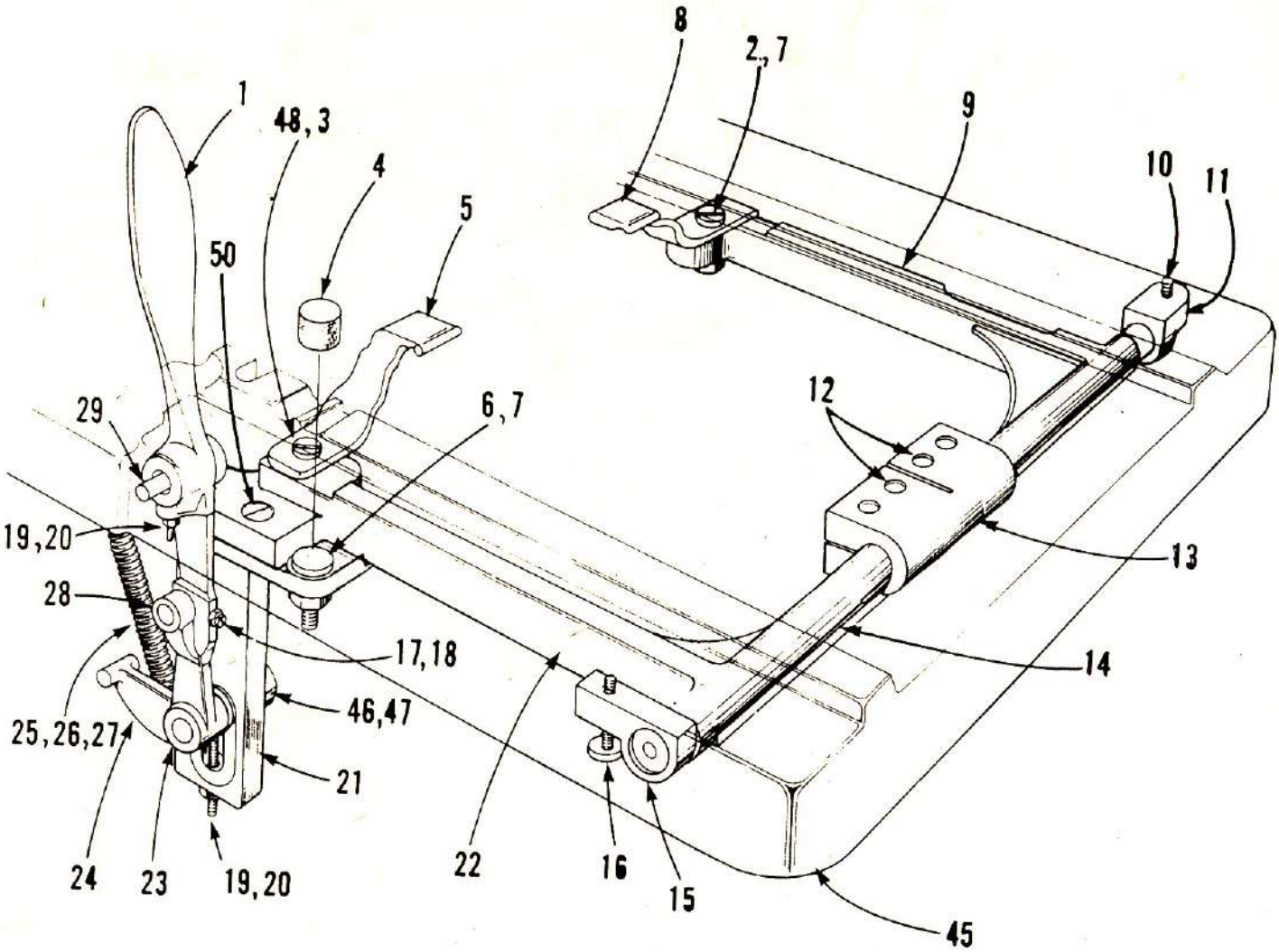

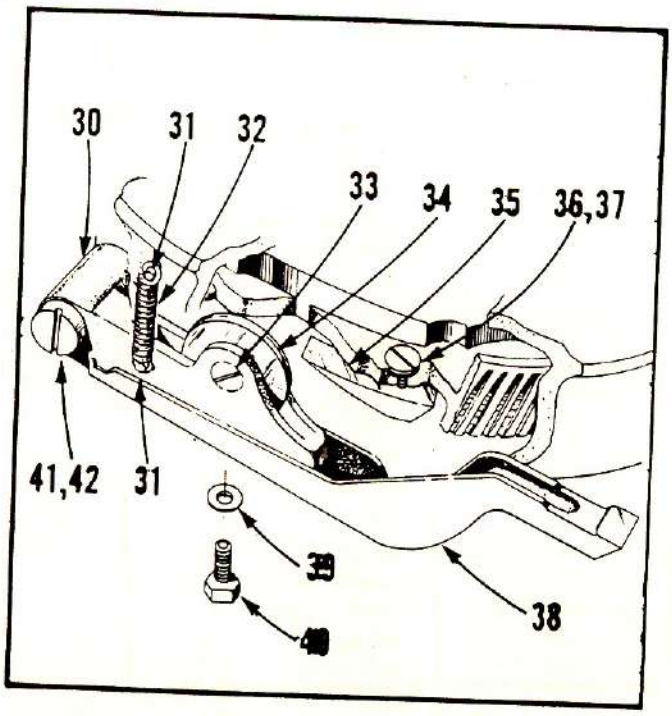

DET.	PART NUMBER	DESCRIPTION
1	10-2019	Clamping Lever
2	01-2539	Screw
3	01-3017	Nut
4	13-2087-1	Bumper
5	10-2028-1	Pull Down, L.H.
6	13-2086	Stop Screw
7	01-3007	Nut
8	10-2027-1	Pull Down, R.H.
9	13-2026-0-006	Clamp Yoke, R.H.
10	01-2328	Screw
11	10-2025-0-017	Yoke Bearing
12	01-1686-0-401	Hex Screw
13	13-2026-0-007	Coupling
14	13-2026-0-001	Clamp Yoke, L.H.
15	10-2025	Clamp Yoke Bearing

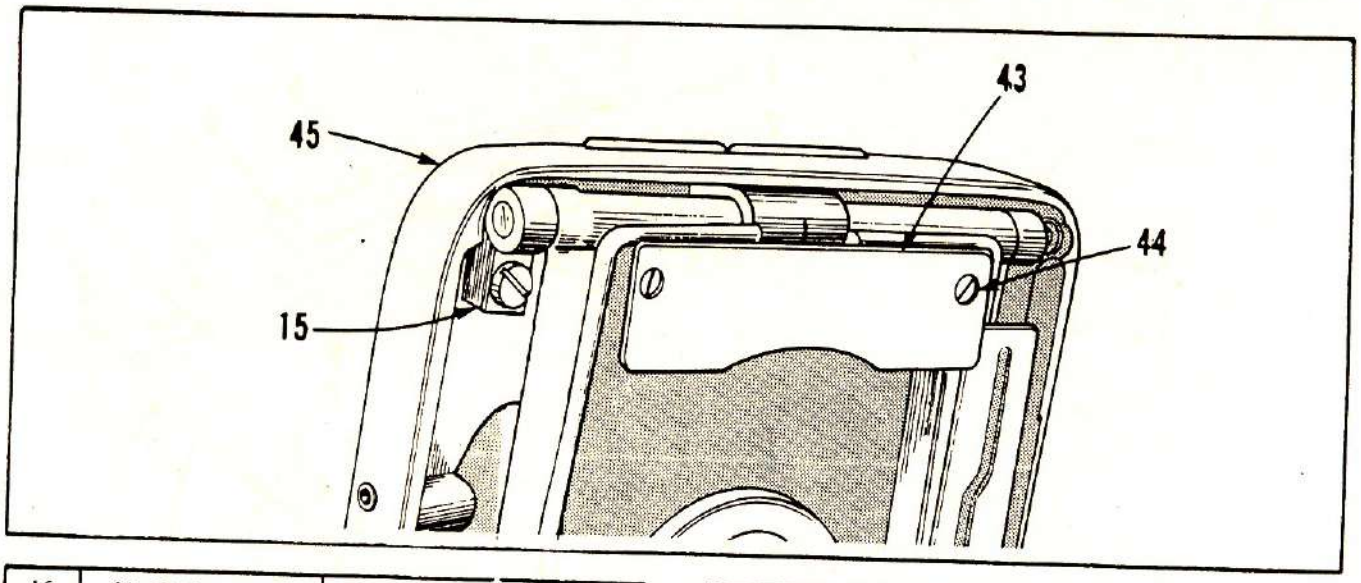

16	01-2046	Screw
17	01-2045	Screw
18	01-3016	Nut
19	01-3001	Nut
20	01-2044	Screw
21	10-2073	Toggle Bracket
22	13-2026-0-005	Clamp Yoke, L.H.
23	10-2024	Stud
24	10-2021	Toggle Lever
	10-2021-0-023	Toggle Lever, (For CB/CA)
25	01-6007	Pin
26	01-5013	Spring
27	01-6006	Pin
28	10-2022	Stud
29	10-2020	Pivot
30	10-3023	Clamping Lever
31	01-6014	Pin
32	01-5015	Spring
33	10-3026	Screw
34	10-3025	Roller
35	10-3061-0-150	Wedge
	13-3061-0-300	Wedge (for CB/CA)
	10-3061-0-200	Clamping Wedge (for AF-CB-R-FE)
36	01-2347	Screw
37	01-4061	Washer
38	10-3022	Arm
39	01-4006	Washer
40	01-2030	Screw
41	01-1076	Bolt
42	01-3014	Nut
43	13-2077-1	Finger Guard
44	01-1613-0-003	Screw
45	13-2001-1-250	Bedplate
46	01-3013	Nut
47	01-4005	Washer
48	01-2048	Screw
50	01-2047	Screw

CLAMPING

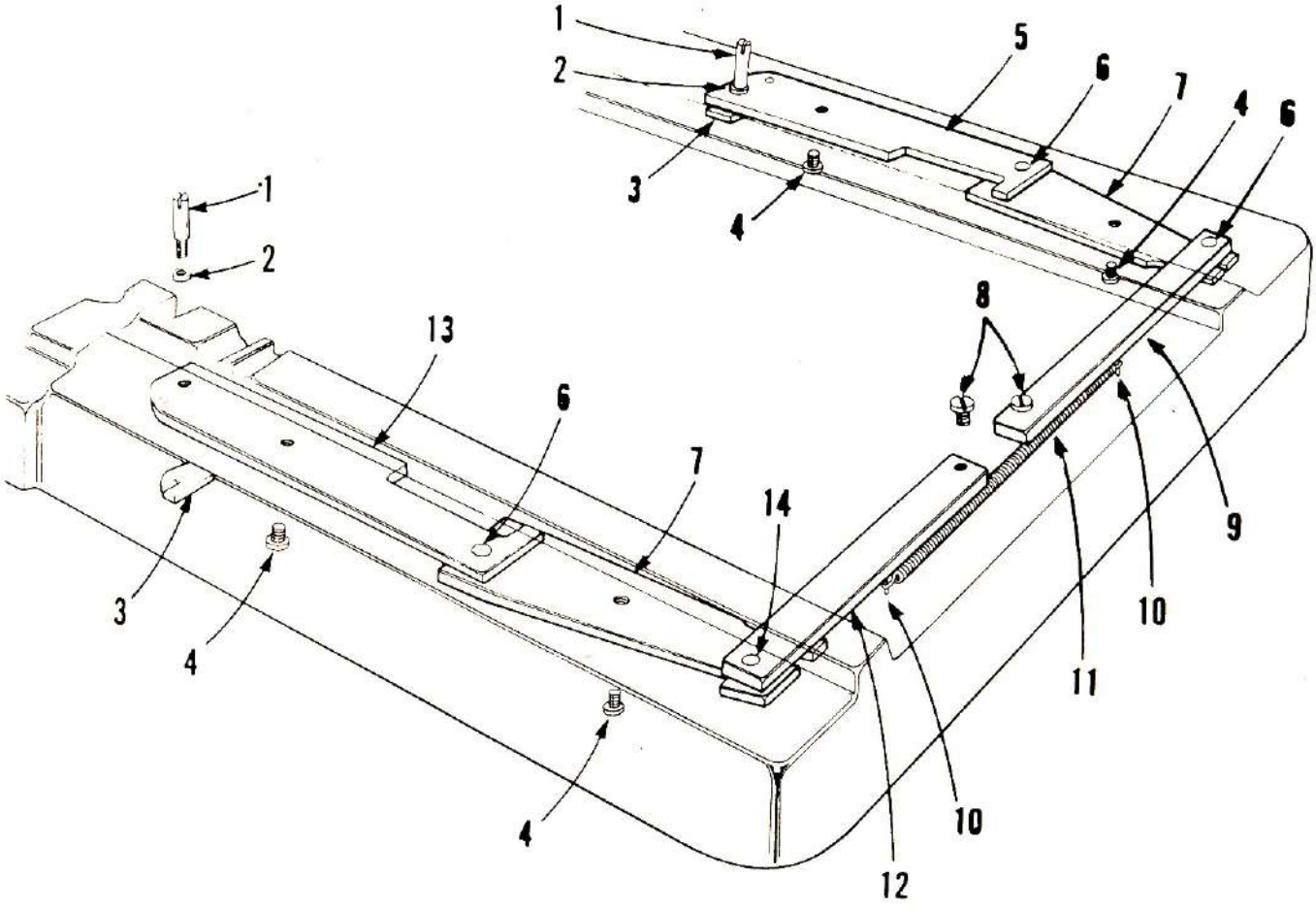

DET.	PART NUMBER	DESCRIPTION
1	10-2042	Screw
2	01-4067	Washer
3	10-2041	Locking Plate
4	10-1021	Screw
5	10-2040-0-050	Right Link Asm.
6	01-6075	Pin
7	10-2036	Lever
8	01-1020	Screw
9	10-2033	Right Clamp Side
10	01-6135	Pin
11	01-5033	Spring
12	10-2034	Left Clamp Side
13	10-2039-0-050	Left Link
14	01-6074	Pin

STARTING LEVER

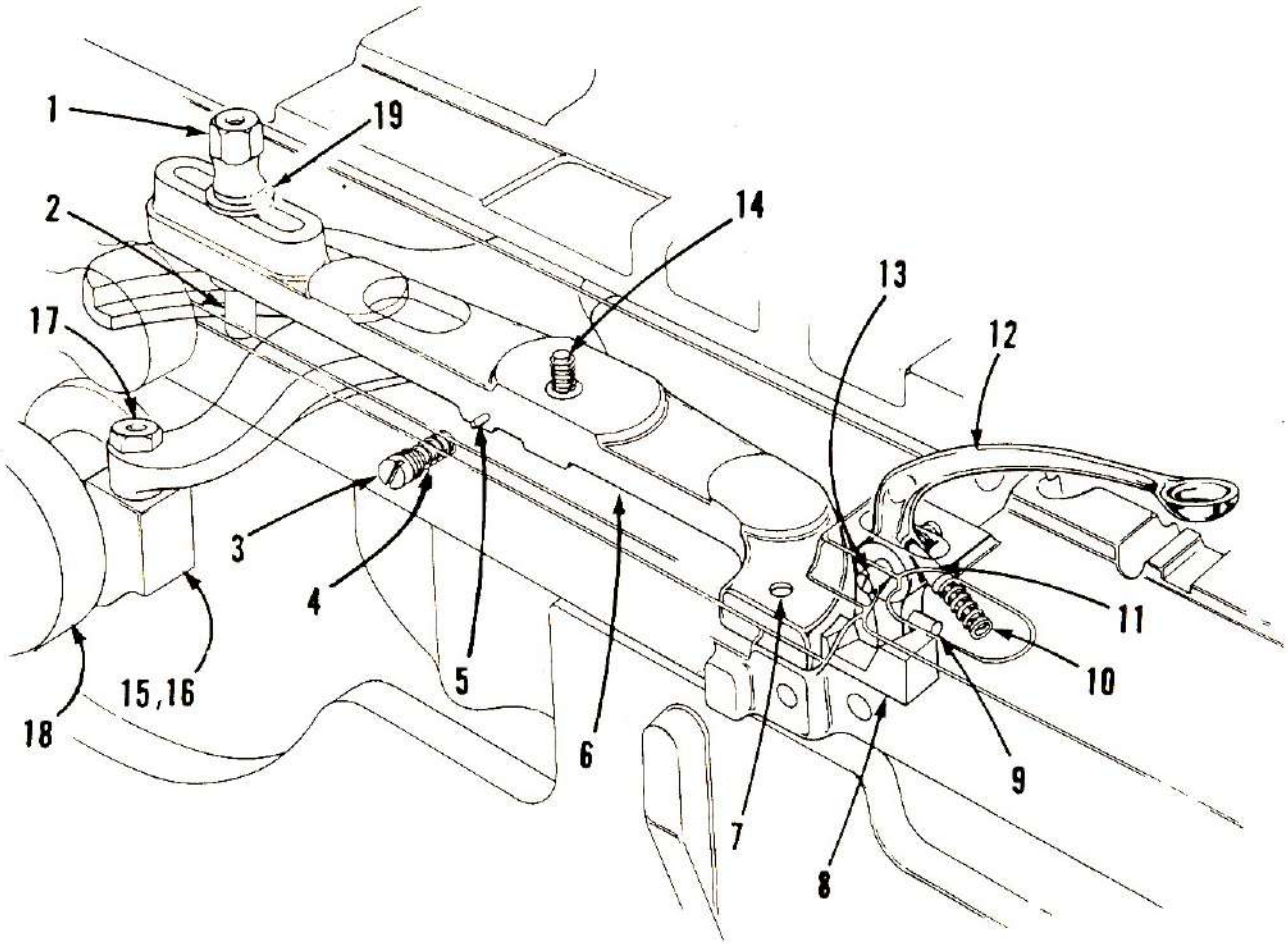

DET.	PART NUMBER	DESCRIPTION
1	10-2008	Nut
2	10-2009	Stud
3	01-2071	Screw
4	01-5019	Spring
5	01-6006	Pin
6	10-2012	Switching Lever
7	01-2041	Screw
8	10-2010	Trip
9	01-6011	Pin
10	01-5020	Spring
11	10-2015	Plunger
12	10-2013	Starting Lever
13	10-2014	Pivot Screw
14	10-2011	Pivot Screw
15	10-3031	Shifter Shoe
16	01-2032	Screw
17	01-3007	Nut
18	10-3045	Shifter Spool
19	01-4006	Washer

LENGTH GAUGE

DET.	PART NUMBER	DESCRIPTION
1	01-2075	Screw
2	10-2261-0-010	Length Gauge (inches)
	10-2261-0-020	Length Gauge (metric)
3	10-2254-1	Wing Nut
4	01-4006	Washer
5	10-2250-1	Nut
6	01-2084	Screw
7	01-2024	Screw
8	01-4003	Washer
9	10-1127-3	Bracket
10	10-1203	Spring Anchor
11	01-6020-1	Pin
12	10-1125	Stud
13	01-5088	Spring
14	10-1053	Cotter Pin
15	01-2066	Screw
16	01-3011	Nut
17	13-1235-0-002	Yoke
18	13-1235-0-001	Upper Lever
19	13-1235-0-004	Screw
20	13-1235-0-005	Screw
21	13-1235-0-006	Stop
22	01-2886-0-002	Screw
23	13-1235-0-003	Sliding Lever
24	13-1124	Trip Lever
25	01-3012	Nut
26	10-1126	Screw
27	01-3005	Nut
28	10-2018-1-250	Length Guide
29	10-2253	Tack Lever
30	10-2252	Screw
31	10-2251-1	Length Plate (Reg. Travel)
	10-2251-1-017	Length Plate (Long Travel)

LENGTH GAUGE CHART	
PART NUMBER	SIZE
10-2261-0-030	1/2" to 1-1/4" (inches)
10-2261-0-040	12 to 32mm (metric)

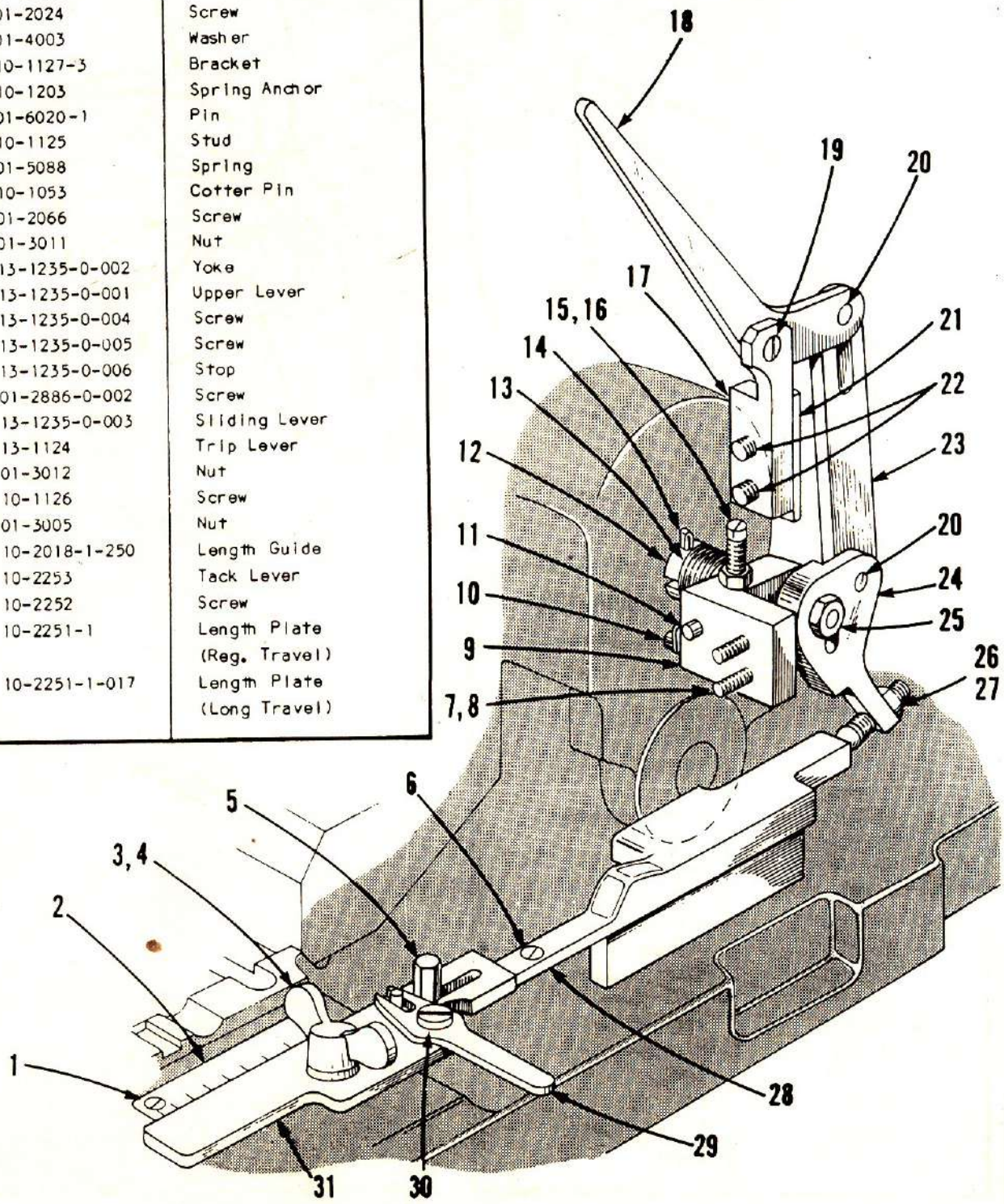

MAIN CAM & SHIFTING LEVER

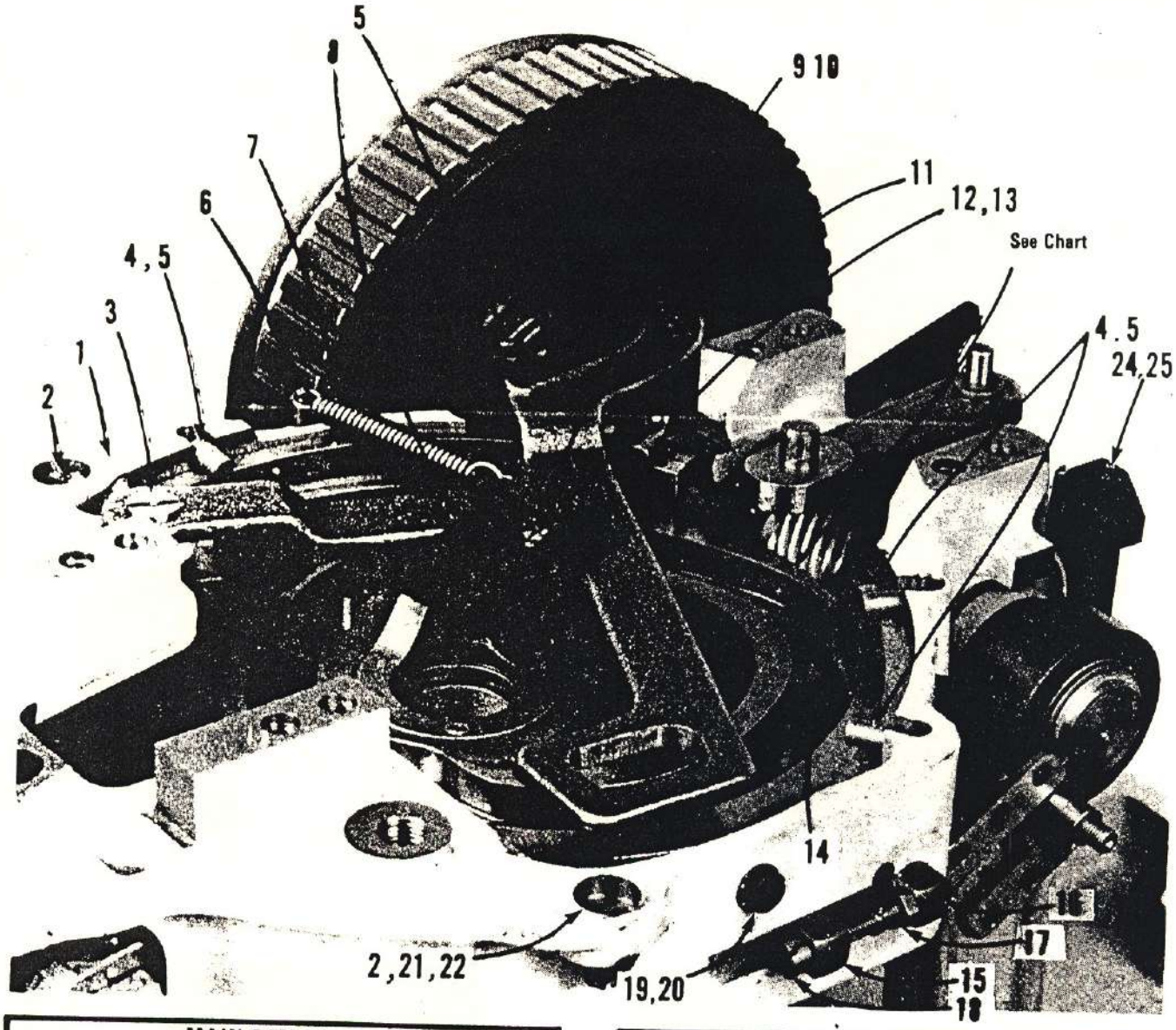

MAIN CAM CHART		
PART NUMBER	DESCRIPTION	STYLE NO.
10-3064-1-001	AF-CA-R-RE	10-0000-0-016
10-3064-1-001	AF-CB/CA-R-RE	10-0000-0-030
10-3069-0-011	AF-CB/CA-R-FE	10-0000-0-022

DET.	PART NUMBER	DESCRIPTION
1	10-3001-1-901	Cam Case
2	10-3028	Button
3	10-3032-1	Screw
4	01-3066-0-011	Long Hook
5	01-3007	Nut
6	01-6025	Pin
7	01-5055	Spring
8	10-3030	Felt Pad
9	01-2004	Screw
10	01-4001	Washer
11	10-3029-1	Shifting Lever (R)
12	10-3066-0-008	Short Hook
13	01-3059	Nut
14	10-3035-1	Hold Down Gip
15	10-3036	Brake Band
16	01-6345	Lug
17	01-3005	Nut
18	01-2033	Screw
19	01-4018	Washer
20	01-2027	Screw
21	01-2067	Screw
22	01-3015	Nut
24	01-2128	Screw
25	13-3083	Support

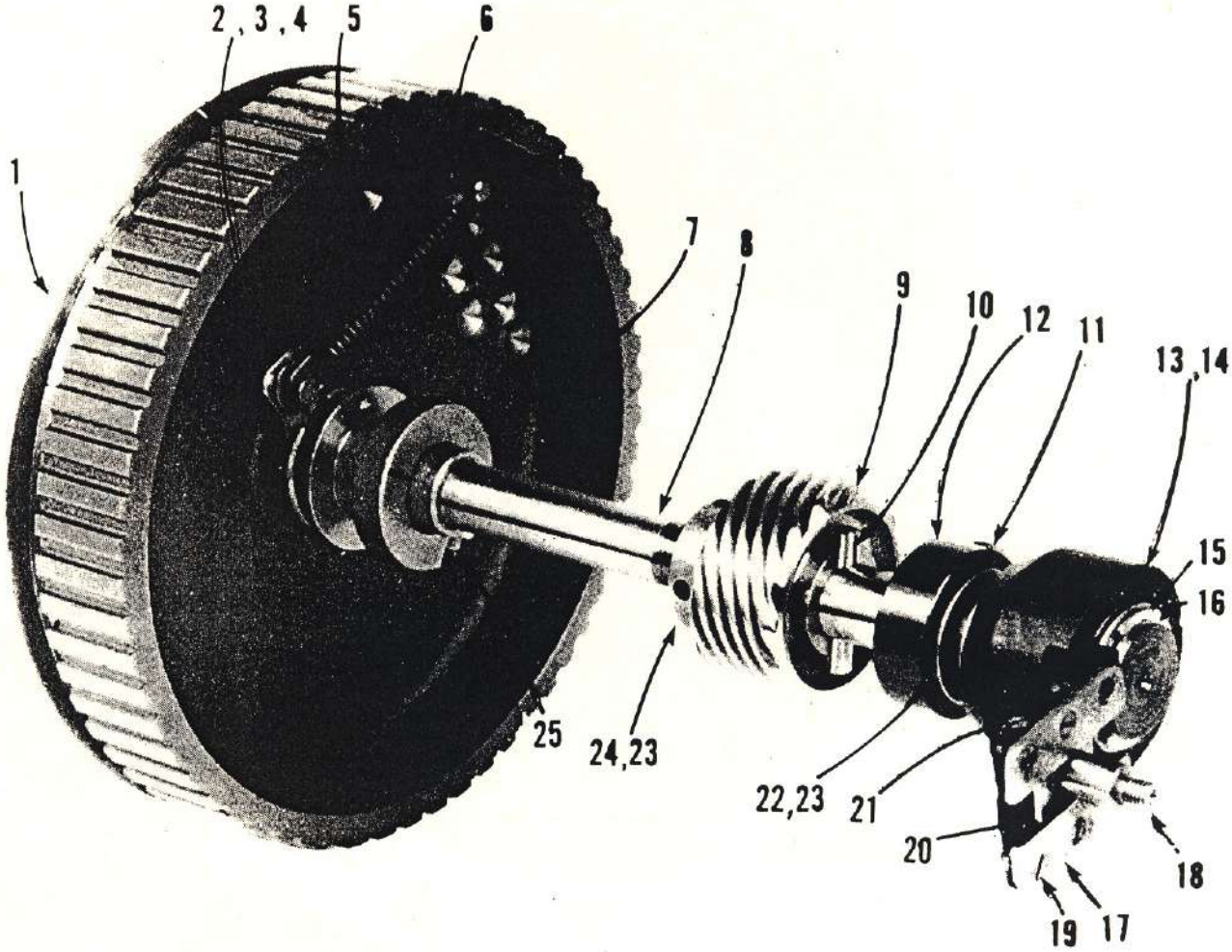
2, 3, 4
5
6
1
7
8
9
10
12
11
13, 14
15
16
25
24,23
22,23
21
20
18
19
17

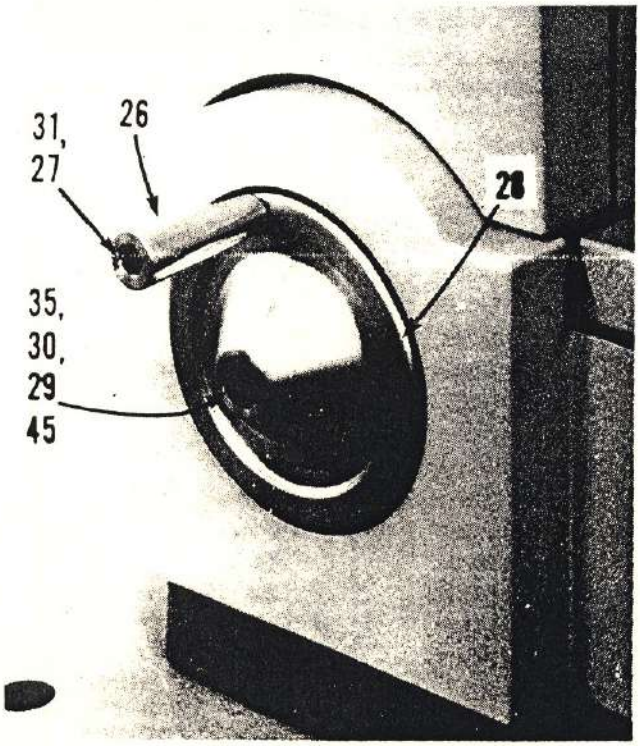
31,
27
26
28
35,
30,
29
45

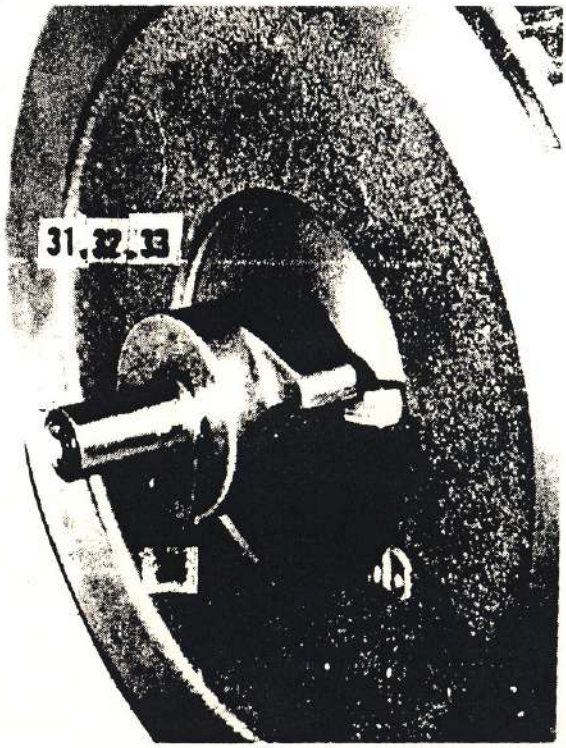
31, 32, 33

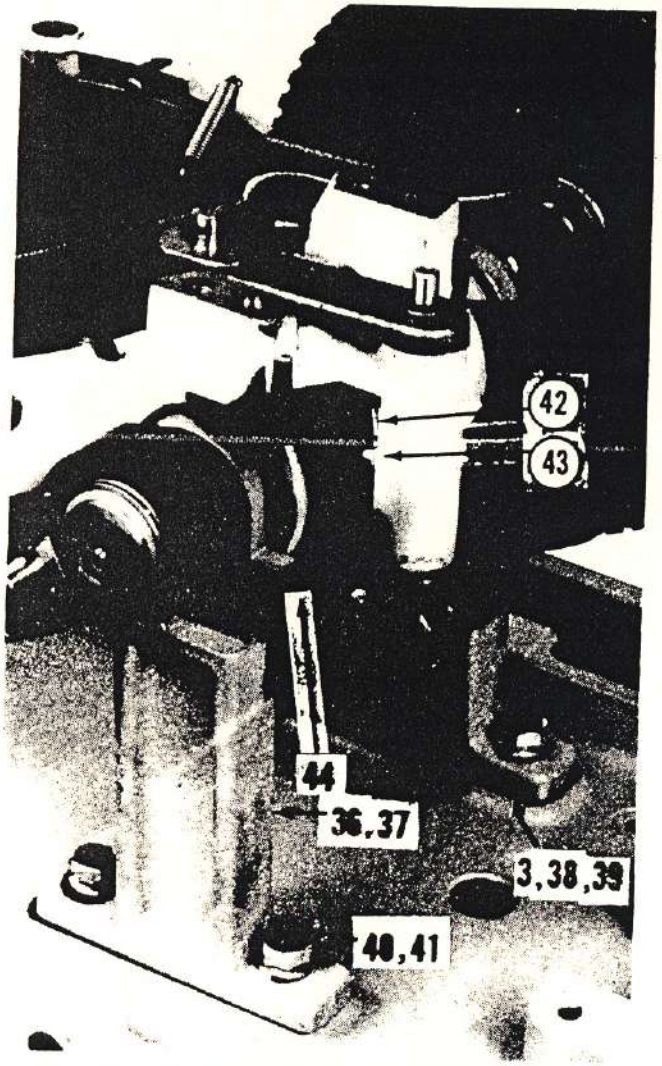

DET.	PART NUMBER	DESCRIPTION
1	13-3039-1-050*	Cutting Wheel Asm.
	13-3039	Wheel
2	10-3042	Dog
3	01-4764	Washer
4	01-6422-0-005	Retaining Ring
5	01-5017	Spring
6	10-3040-1	Dog
7	10-3045	Spool
8	13-3047-1-801	Shaft
9	10-3050	Worm
10	10-3051	Drive Pin
11	01-1737-0-400	Screw
12	13-3122	Collar
13	13-3100-0-001	Arm
	13-3100	Arm Asm.
14	01-7624	Clutch and Bearing
15	01-4746	Washer
16	01-6670-0-002	Retaining Ring
17	10-3080	Outer Plate
18	13-3079	Slide Stud
19	01-2075	Screw
20	10-3082	Inner Plate
21	01-2008	Screw
22	01-4747	Washer
23	01-4009	Lock Washer
24	10-3049	Collar
25	01-2035	Screw
26	13-3101-0-002	Handle
27	01-1470	Screw
28	13-3101-2-001	Handwheel
29	01-7653	Bearing
30	13-3117	Screw
31	05-0192	Locktite Grade C
32	13-3123	Drive Hub
33	01-1773-0-400	Screw
34	01-8007-0-001	Key
35	01-4482	"O" Ring
36	13-3105	Bracket (R.H.)
37	13-3106-0-002	Bushing (R.H.)
38	13-3102-0-001	Bracket (L.H.)
39	13-3106-0-001	Bushing (L.H.)
40	01-4581	Lockwasher
41	01-2877-0-003	Screw
42	13-3083	Support
43	01-2128	Screw
44	13-3097	Bracket
45	01-7722	Sleeve

* Assembly, Refer to Parts Index for Components

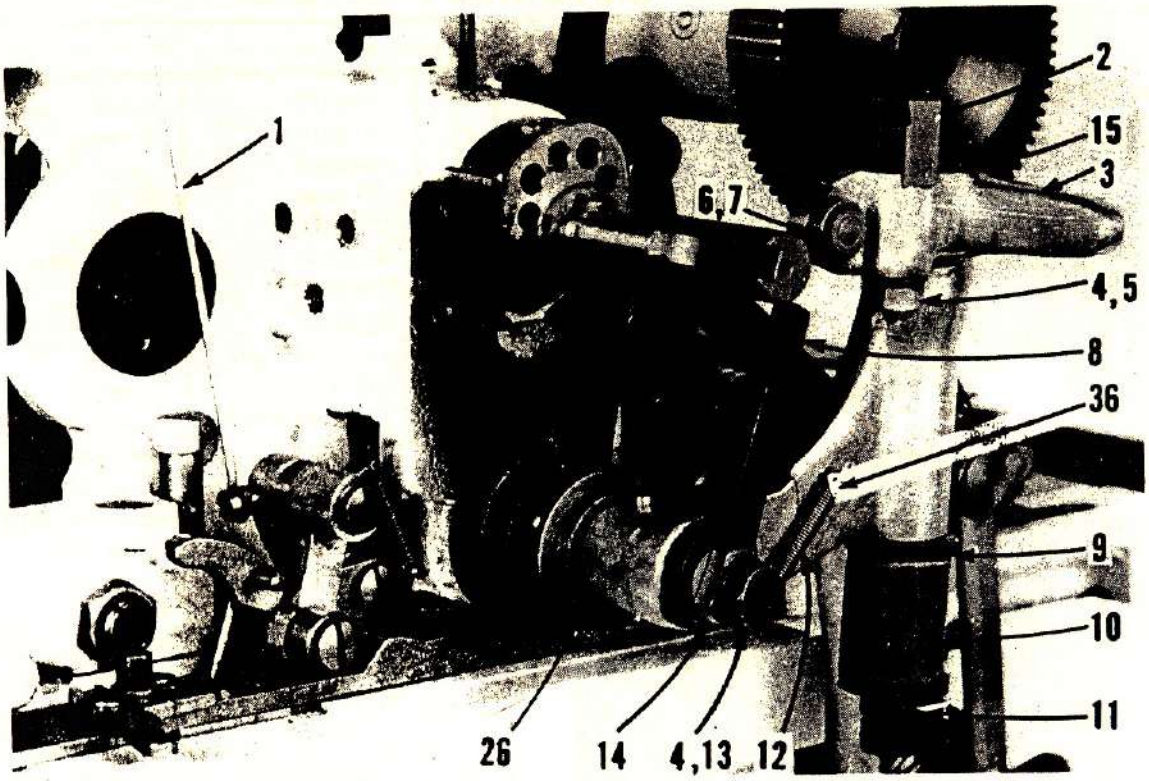
1
2
15
3
6,7
4,5
8
36
9
10
11
26
14
4,13
12

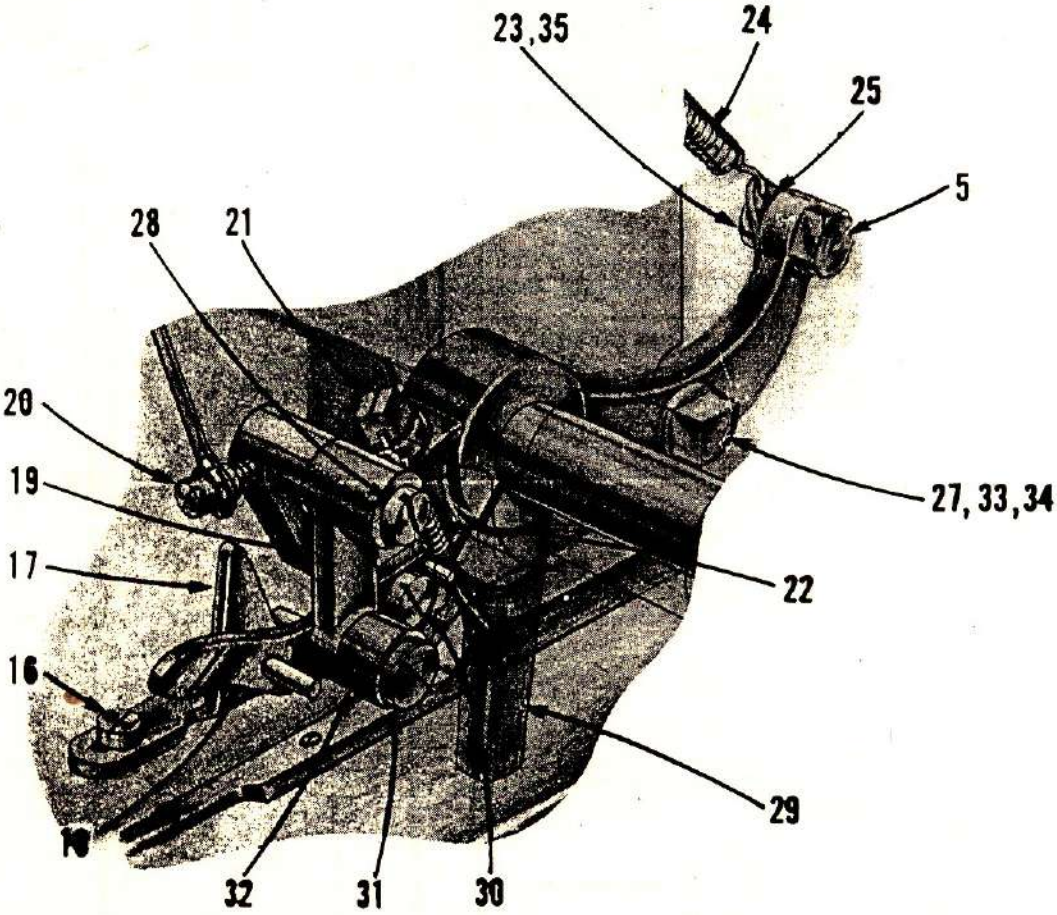
23,35
24
25
5
28
21
20
19
17
16
18
27,33,34
22
29
32
31
30

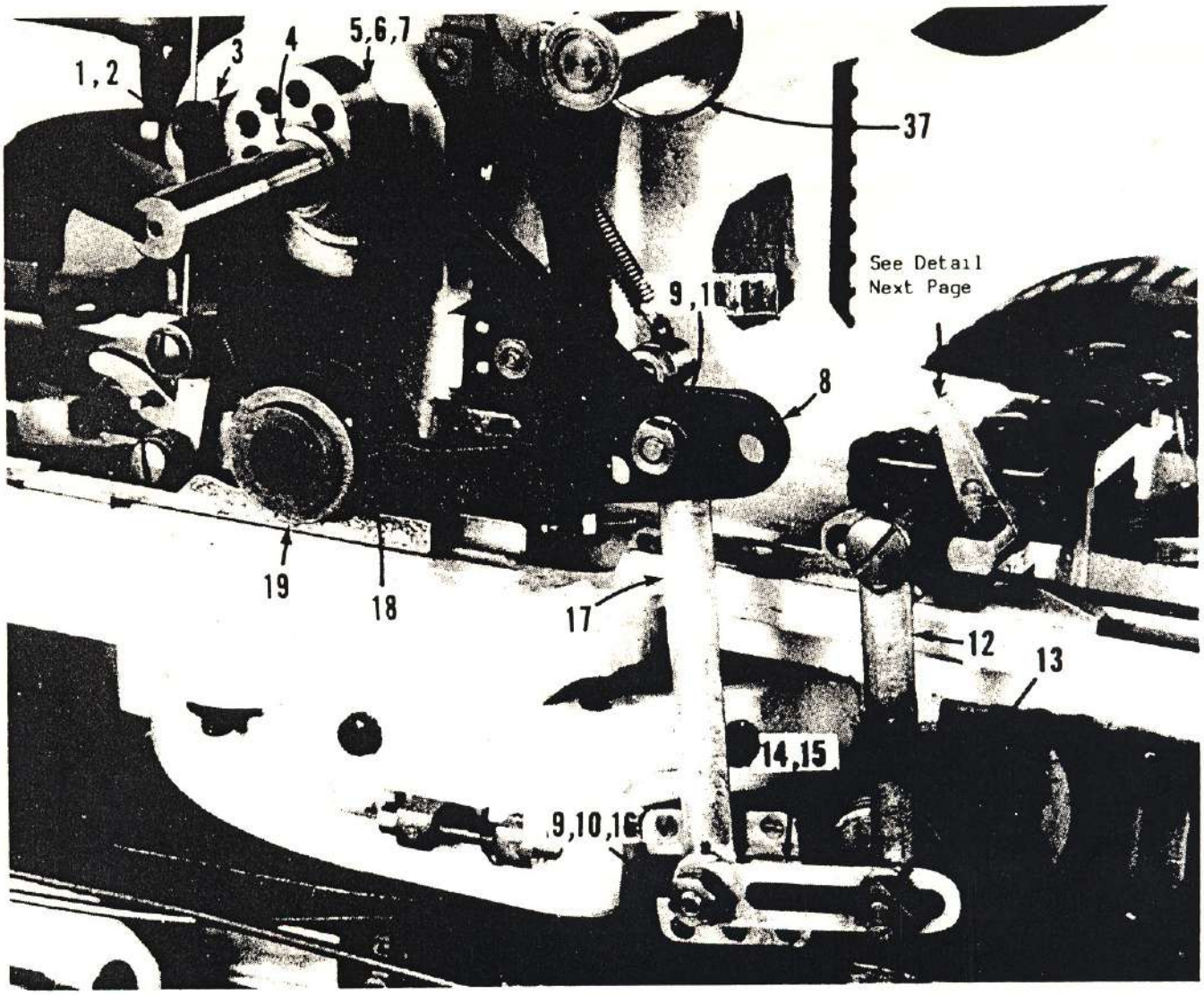

DET.	PART NUMBER	DESCRIPTION
1	01-2022	Screw
2	01-4019	Lock Washer
3	10-1107-0-801	Wear Plate
4	01-8002	Key
5	10-1093-0-200	Cam
6	01-2249	Screw
7	01-7534-0-100	Thread Insert
8	13-1108-0-801	Follower
9	01-3042	Nut
10	01-4063	Washer
11	01-1781	Screw
12	10-1168	Link
13	01-3019	Nut
14	10-3081	Arm
15	01-1028	Stud
16	13-3079	Slide Stud
17	10-1109-3	Link
18	01-2028	Screw
19	01-7038	Collar
20	01-2344	Screw
21	01-5447	Spring
22	10-1169	Shifter
23	01-2391	Screw
24	01-3005	Nut
25	01-2146	Screw
26	10-2007-0-350	Roll

DETAIL

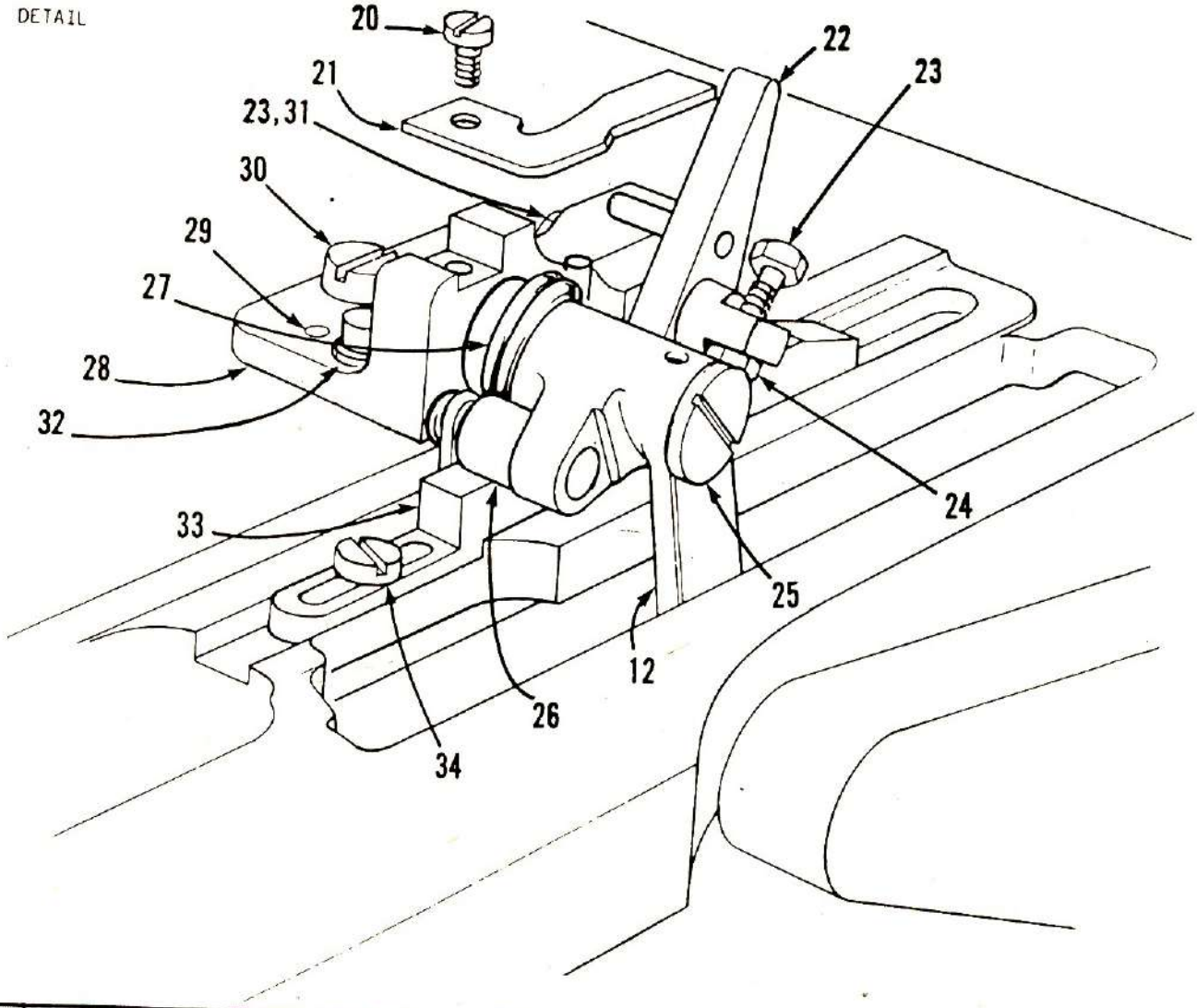

27	01-5448	Spring
28	10-1167-1	Block
29	01-6428	Pin
30	01-2568	Screw
31	01-4042	Washer
32	01-2130	Screw
33	10-2061	Stitch Take-Out Wedge
	10-2061-0-984	Stitch Take-Out Wedge (CT)
34	01-2041	Screw
37	13-1231-2	Flanged Bearing

FLYOVER LEVER, STOP WHEEL & STITCH PULLEY

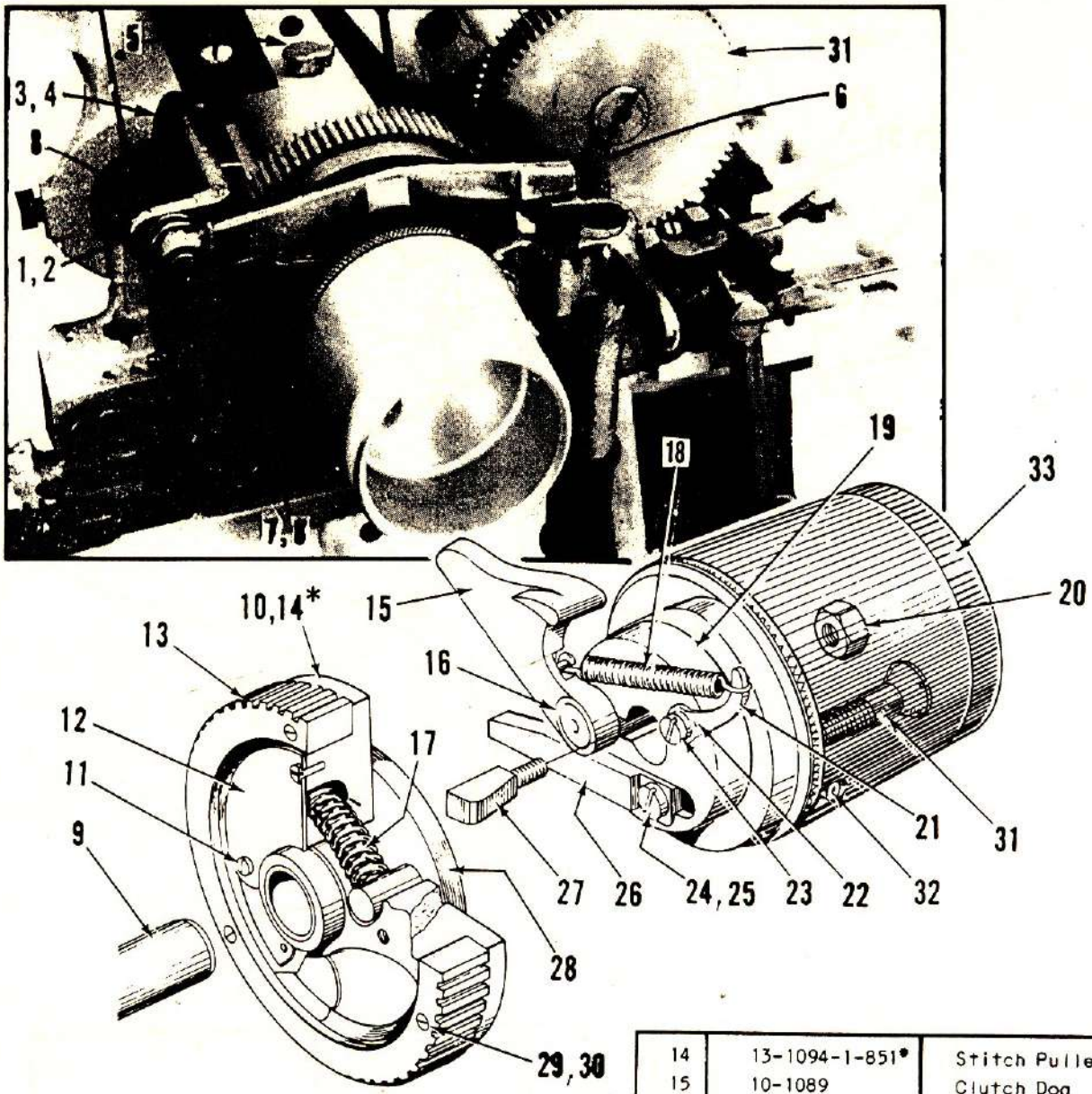

DET.	PART NUMBER	DESCRIPTION
1	01-4002	Washer
2	01-5007	Spring
3	01-2017	Screw
4	10-1087	Bracket
5	10-1149	Oil Cup
6	10-1085	Flyover Lever
7	10-1086	Screw
8	01-3005	Nut
9	13-1091-2-050*	Stitch Cam & Shaft Assm.
10	13-1094	Stitch Pulley
11	01-2126	Screw
12	13-1096	Cover Plate
13	13-1232	Spur Gear
14	13-1094-1-851*	Stitch Pulley Assm.
15	10-1089	Clutch Dog
16	01-6348	Stud
17	01-5009	Spring
18	01-5606	Spring
19	13-1088-1-000*	Stop Wheel Assm.
	13-1088-1-001	Stop Wheel
20	01-3007	Nut
21	10-1090	Arm
22	01-6600	Pin
23	01-2079	Screw
24	01-2571	Screw
25	01-4019	Washer
26	10-1155-1	Stop
27	10-1097-1	Key
28	13-1095	Drive Cam w/Bushing
29	01-2293-0-002	Screw
30	05-1096	Locktite
31	13-1003	Screw
32	01-2401	Screw
33	13-1240-0-001	Hand Grip

* Assembly, Refer to Parts Index for Components

STITCH DRIVE ASSEMBLY

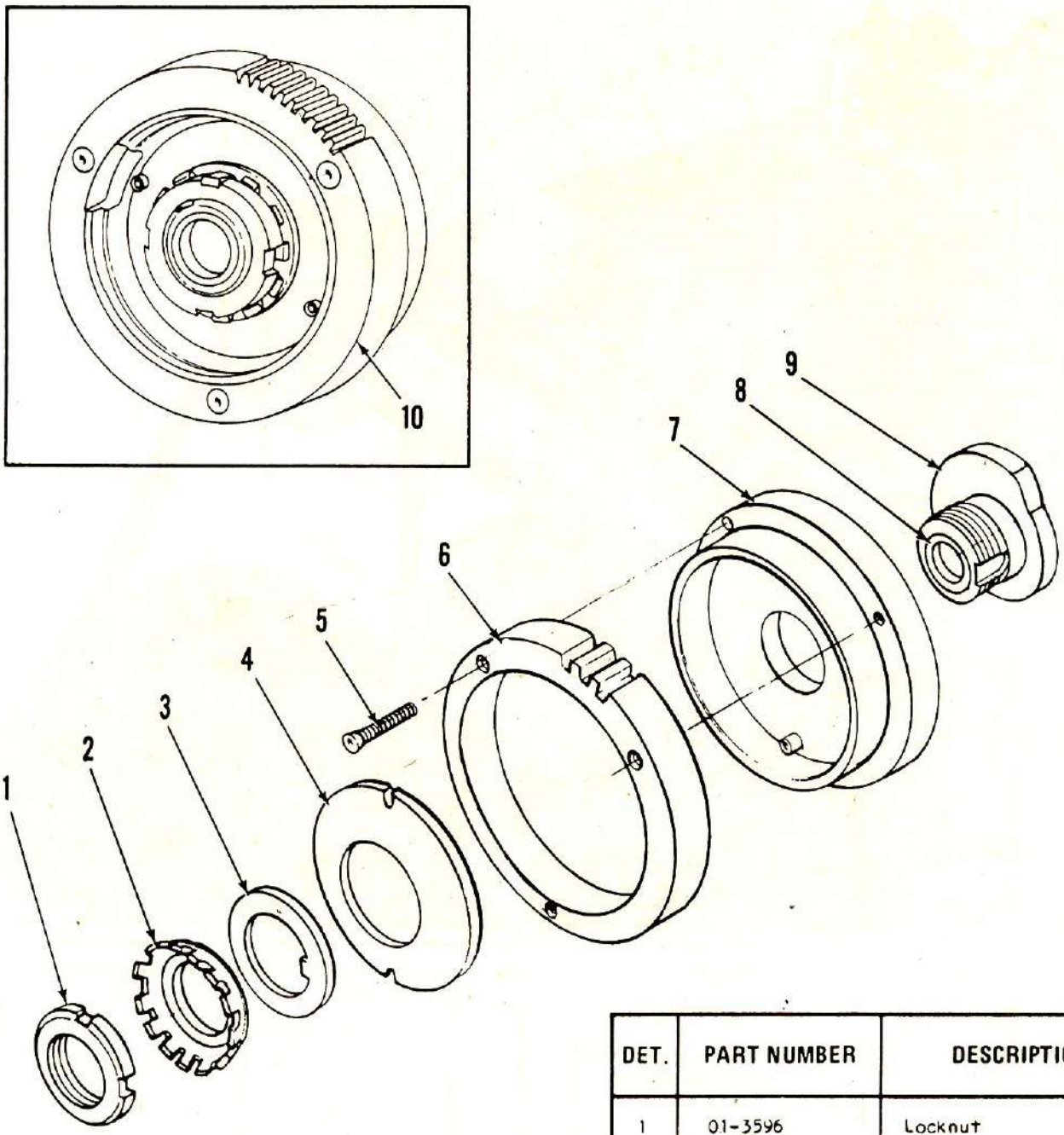

DET.	PART NUMBER	DESCRIPTION
1	01-3596	Locknut
2	13-1103	Lockwasher
3	01-4788-1	Washer, Keyed
4	13-1104-1	Washer, Spring
5	01-2293-0-002	Screw (3 used)
6	13-1233	Spur Gear
7	13-1106	Stitch Drive Hub
8	01-7667	Bearing (2 used)
9	13-1105-1	Drive Cam
10	13-1107	Stitch Drive Asm.*

* Assembly, Refer to Parts Index for Components

STITCH DRIVE SHAFT ASSEMBLY

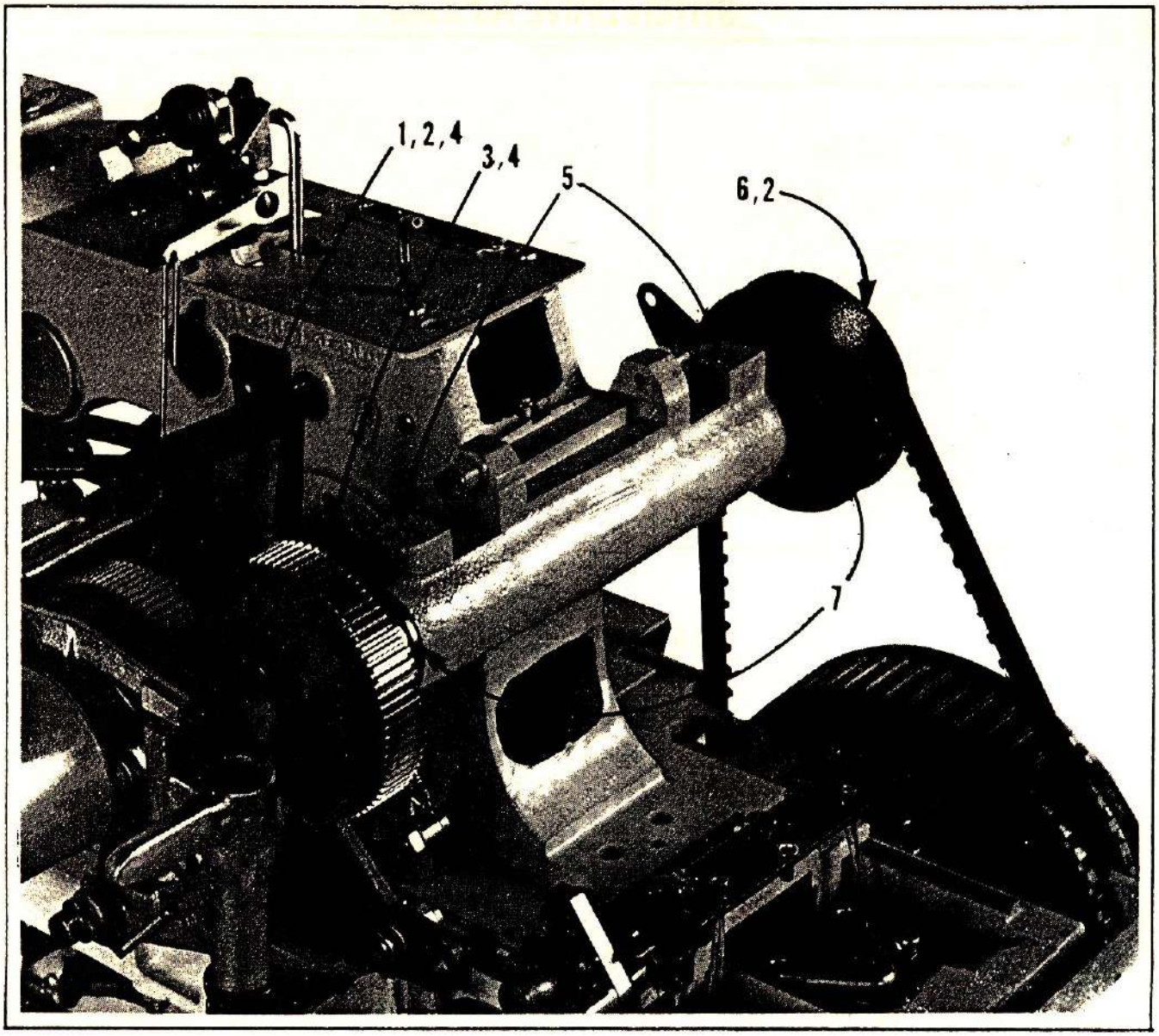

DET.	PART NUMBER	DESCRIPTION
1	13-1237	Stitch Drive Shaft
2	01-8413	Key
3	13-1238	Spur Gear
4	01-2849-0-002	Set Screw
5	04-0514	Wick
6	13-1239	Stitch Drive Pulley
7	13-1231	Bearing

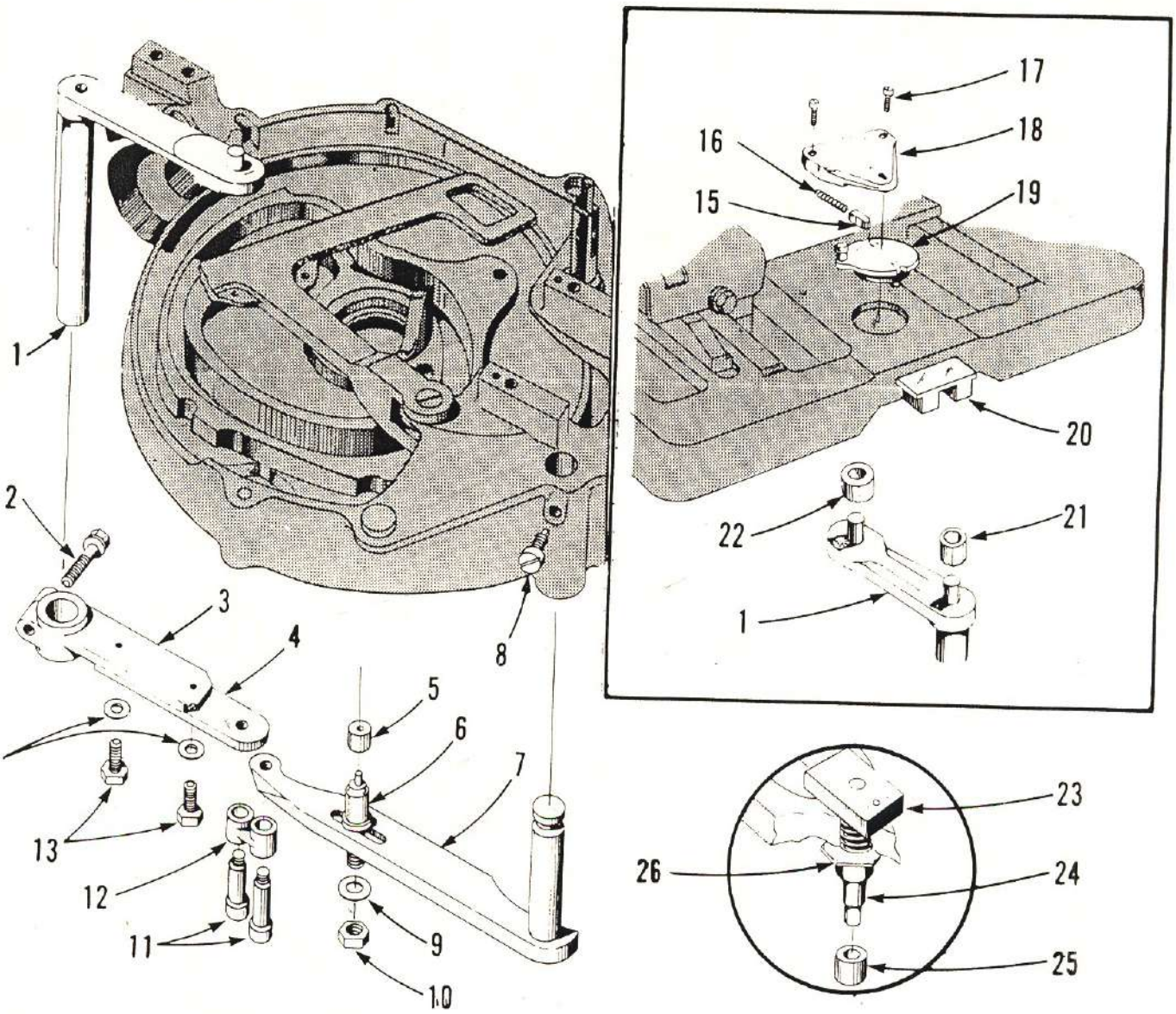

ITEM.	PART NUMBER	DESCRIPTION
1	10-3034-0-258	Upper Lateral Lever
	10-3034-0-300	Upper " " " (CT)
2	01-2016	Screw
3	10-3019-1-006	Lower Lateral Lever
	10-3019-0-300	Lower " " " (CT)
4	10-3300-0-006	Lever Extension
5	01-7004	Roll
6	10-3020-0-006	Stud
	10-3020	Stud (CT)
7	10-3303	Combination Lever
8	01-2324	Screw
9	01-4005	Washer
10	01-3013	Nut
11	10-3301-1-006	Screw
12	10-3302	Link
13	01-2085	Screw
14	01-4006	Washer
15	10-2259	Plunger
16	01-5172	Spring
17	01-2392	Screw
18	10-2258	Cover
19	10-2257	Shifter
20	10-2260-0-200	Guide Plate
21	01-7023	Roll
22	01-2043	Roll
23	10-3033-0-017	Block
24	10-2006-2	Bedplate Stud
25	10-2007	Roll
26	10-2058	Clip

NEEDLE BAR DRIVE

Size of Roll is etched on both sides of Stitch Cam.

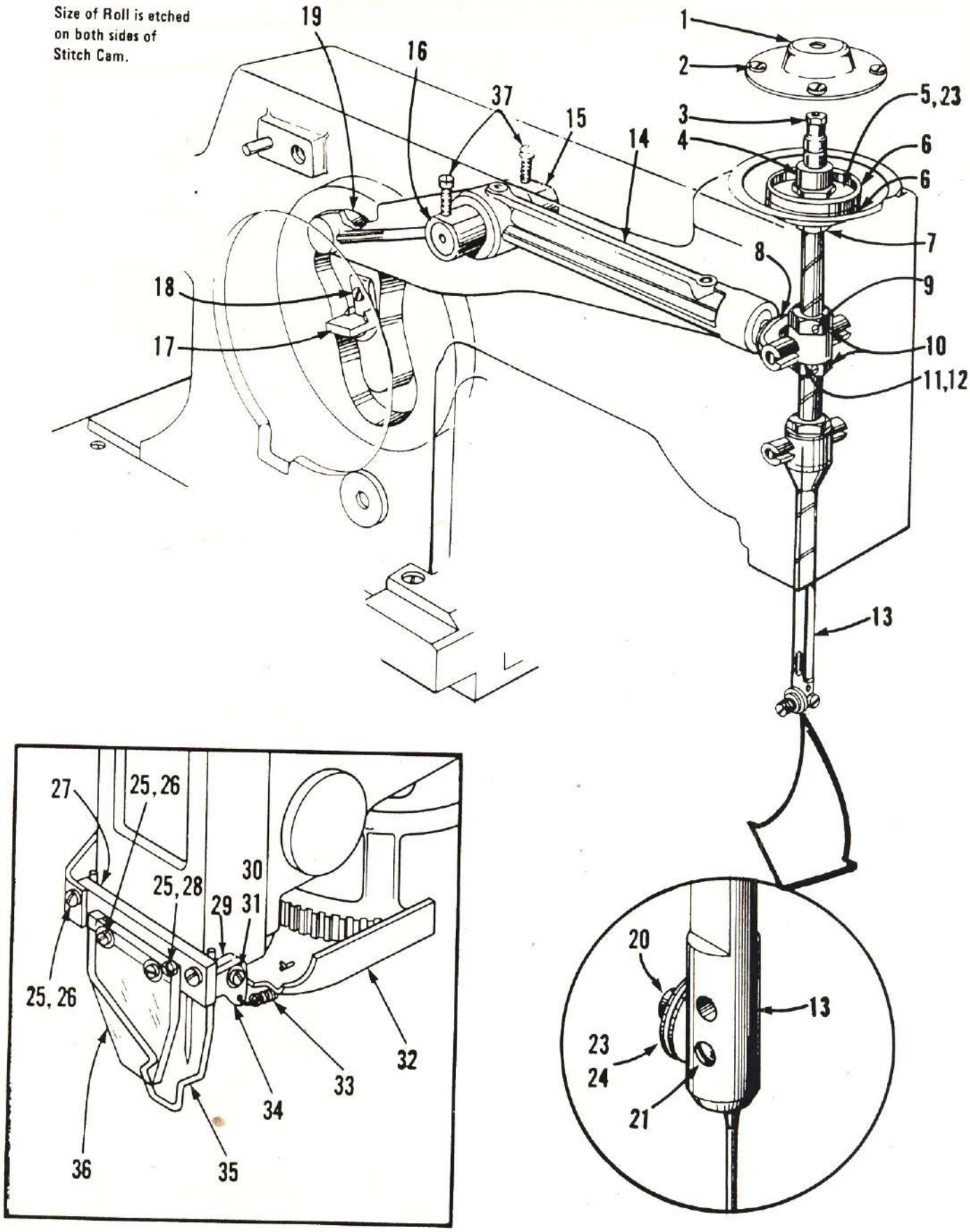

NEEDLE BAR DRIVE

DET.	PART NUMBER	DESCRIPTION
1	10-1014-1	Cap
2	01-2131	Screw
3	10-1032	Bushing
4	10-1017-3-801	Guide
5	10-1016-3-050*	Needle Bar Guide
6	10-1015-1	Spacer
7	10-1016-2	Nut
8	10-1046-2	Yoke
9	01-2419	Screw
10	10-1027-2	Nut
11	10-1045-2	Gimbal
12	01-7015	Bushing
13	10-1028-2	Needle Bar
14	10-1047-1	Lever
15	13-1049	Bushing
16	13-1050	Pivot Stud
17	10-1152	Clip
18	01-2079	Screw
19	10-1122-0-010	Roll (see Chart)
20	10-1030-0-017	Screw
21	01-2193	Screw
22	10-1029	Disc
23	01-5167	Spring
24	13-1029	Tension Plate
25	01-2343	Screw
	01-2261-0-002	Screw
26	01-4411	Washer
27	13-1258	Mounting Block
28	01-4571	Lockwasher
29	13-1260	Pivot Arm
30	01-1733-0-404	Screw
31	01-4537	Washer
32	13-1253	Sector Gear Cover
33	01-5636	Spring
34	13-1259	Spring Clip
35	13-1252-0-002	Needle Guard
36	13-1254	Eye Shield
37	01-2599-0-003	Screw

* Assembly, Refer to Parts Index for Components

ROLL CHART

DIA.	ROLLER PART NO.	SIZE
.5000 + .0000 − .0003	10-1122-0-010	STD.
.5002 + .0000 − .0002	10-1122-0-999	#1 O.S.
.5004 − .0000 − .0002	10-1122-0-998	#2 O.S.
.5006 + .0000 − .0002	10-1122-0-980	#3 O.S.
.5008 + .0000 − .0002	10-1122-0-979	#4 O.S.
* .5010 + .0000 − .0002	10-1122-0-011	#5 O.S.
* 5014 + .0000 − .0002	10-1122-0-012	#6 O.S.
* 5018 + .0000 − .0002	10-1122-0-013	#7 O.S.
* 5022 + .0000 − .0002	10-1122-0-014	#8 O.S.
* 5026 + .0000 − .0002	10-1122-0-015	#9 O.S.
* 5030 + .0000 − .0002	10-1122-0-016	#10 O.S.
* .5105/.5110	10-1122-0-017	

*** TO BE USED ON OVERSIZED CAM SLOTS**

NEEDLE BAR VIBRATOR

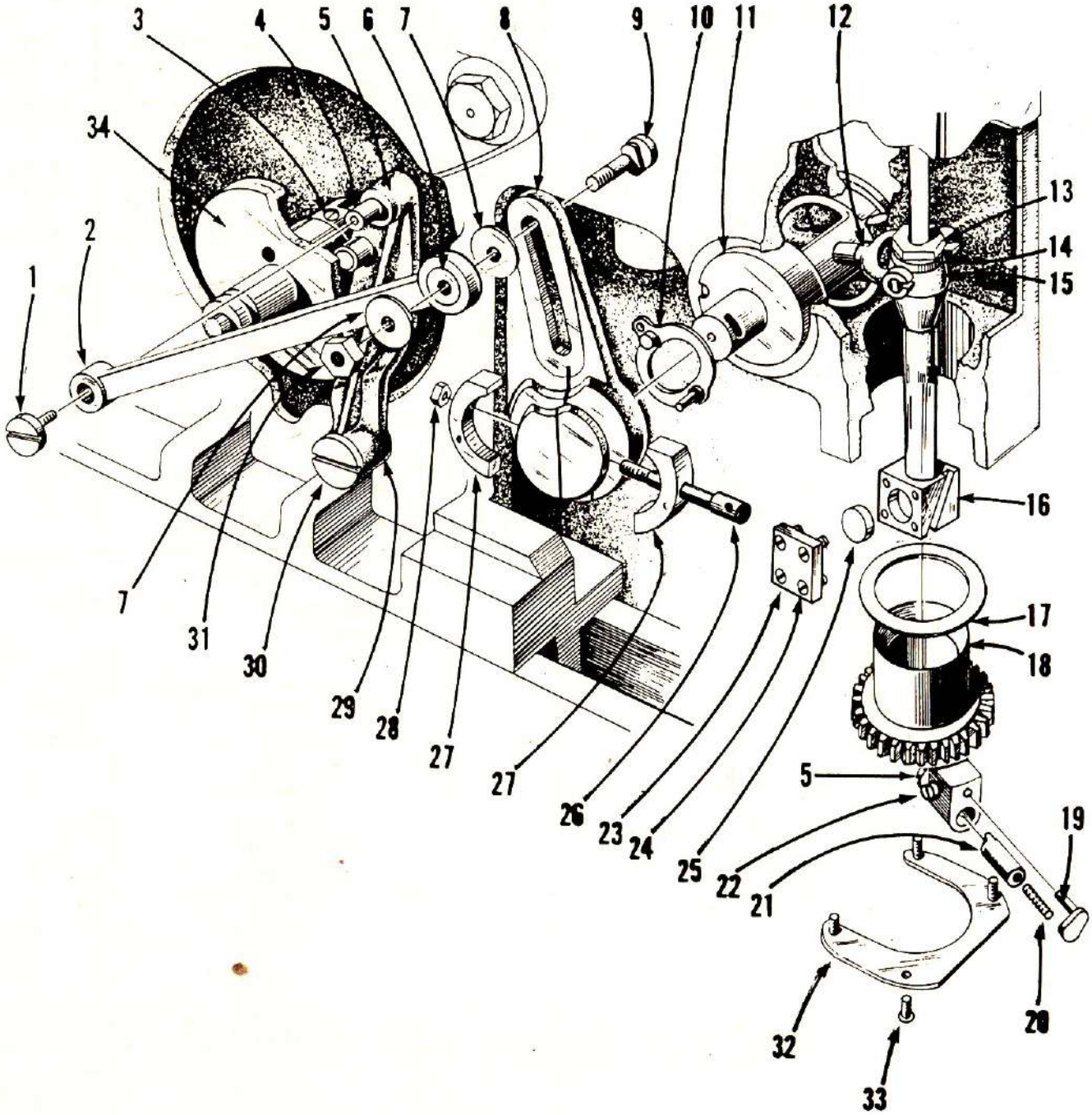

NEEDLE BAR VIBRATOR

DET.	PART NUMBER	DESCRIPTION
1	01-2011	Screw
2	10-1041	Drag Link
3	10-1031	Screw
4	10-1076	Coupling Block
5	10-1024-0-002	Washer (Standard) .0779" - .0782"
	10-1024-0-001	Washer (Oversize) .0782" - .0785"
	10-1024-0-003	Washer (Oversize) .0776" - .0779"
6	10-1040	Bushing
7	10-1039	Washer
8	10-1038-2	Crank
9	10-1037	Stud
10	10-1153-0-801	Plate
11	10-1035-2	Barrel
12	10-1034	Yoke
13	10-1156	Nut
14	01-4034-0-001	Washer (.0623" - .0626")
	01-4034-0-002	Washer (.0626" - .0629")
	01-4034-0-003	Washer (.0629" - .0632")
	01-4034-0-004	Washer (.0632" - .0635")
	01-4034-0-005	Washer (.0635" - .0638")
15	10-1033-1	Gimbal
16	10-1026-2	Block
17	01-4081-0-005	Shim (.005")
	01-4081-0-006	Shim (.007")
	01-4081-0-008	Shim (.008")
	01-4081-0-009	Shim (.009")
	01-4081-0-010	Shim (.010")
	01-4081-0-011	Shim (.011")
	01-4081-0-012	Shim (.012")
18	10-1023-3	Gear
19	10-1021	Retainer
20	01-5003	Spring
21	10-1022	Guide
22	01-2008	Screw
23	10-1065	Cap
24	01-2100	Screw
25		Button (see Chart)
26	13-1036	Bolt
27	10-1147	Block
28	01-3028	Nut
29	10-1043	Cam Follower
30	10-1044	Screw
31	01-3012	Nut
32	10-1150	Plate
33	01-2075	Screw
34	05-0531-0-001	Cam

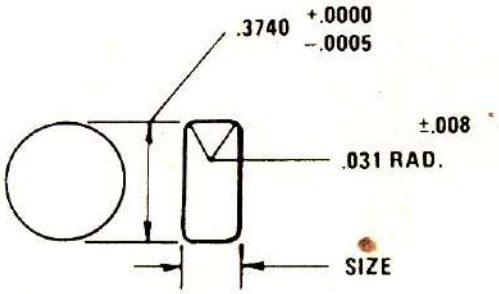

When ordering button 10-1025-1 specify additional button number in description column of part order.

BUTTON CHART	
BUTTON NUMBER	**SIZE**
00	.18600 - .18624
0	.18625 - .18649
1	.18650 - .18674
2	.18675 - .18699
3	.18700 - .18724
4	.18725 - .18749
5	.18750 - .18774
6	.18775 - .18799
7	.18800 - .18824
8	.18825 - .18849
9	.18850 - .18874
10	.18875 - .18899
11	.18900 - .18924
12	.18925 - .18950

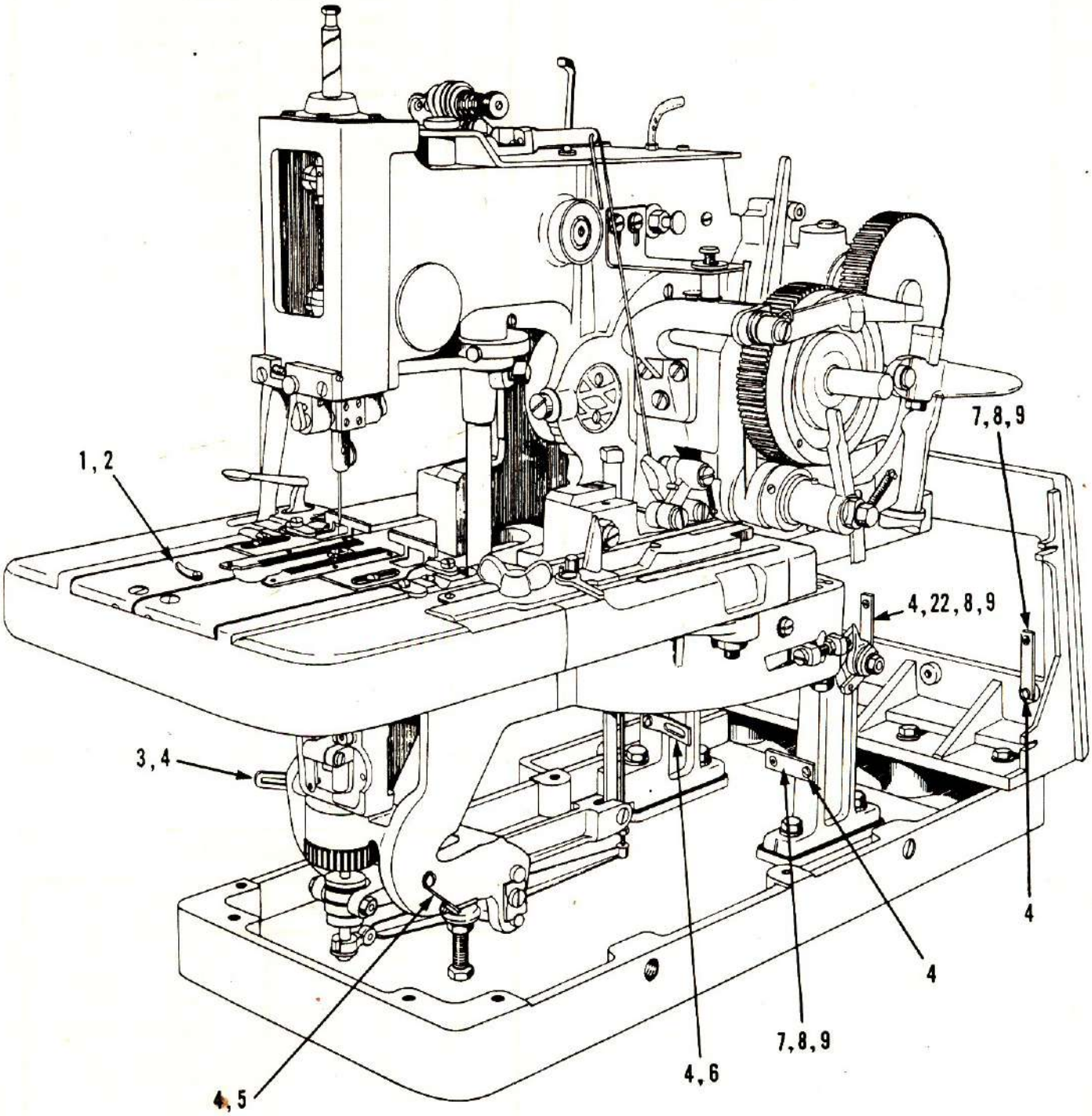
1, 2
7, 8, 9
4, 22, 8, 9
3, 4
4
4
7, 8, 9
4, 6
4, 5

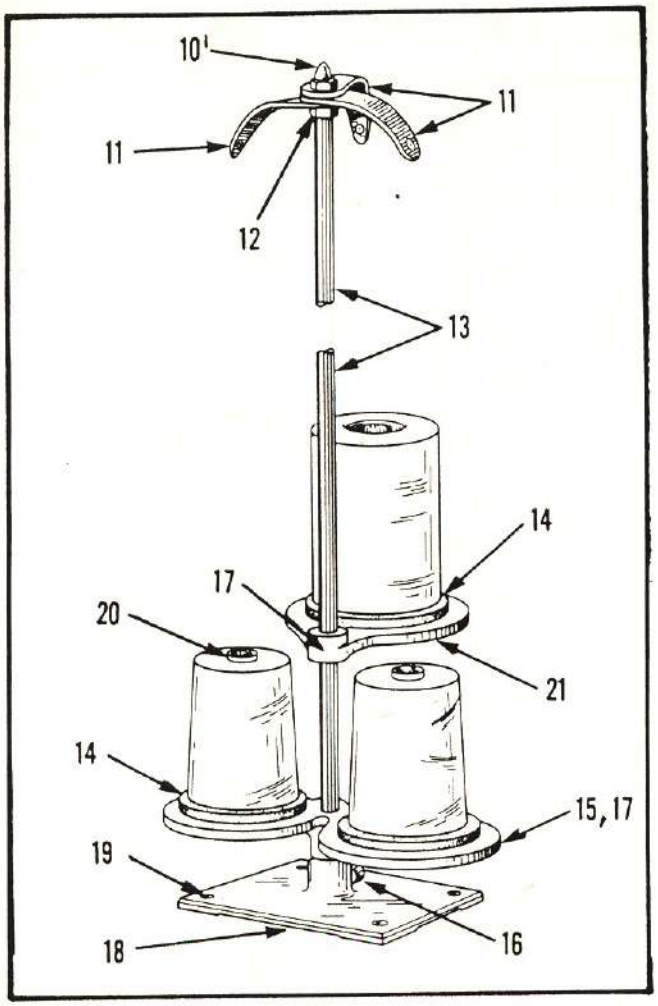

DET.	PART NUMBER	DESCRIPTION
1	01-2053	Screw
2	10-2054	Clip
3	10-3607-1	Cord Guide
4	01-2247-0-002	Screw
5	10-4550	Guide
6	13-3127	Cord Guide
7	13-3109-2-901	Thread Guide
8	01-7447	Guide
9	01-6551	Ring Retainer
10	01-3052	Nut
11	05-0004-0-001	Arm
12	01-3026	Nut
13	05-0005	Post
14	05-0006	Felt
15	05-0002-0-001	Shelf, double
16	01-2115	Screw
17	01-2492	Screw
18	05-0001-0-055*	Thread Stand Asm.
	05-0001-0-001	Thread Stand Base, Only
19	01-2190	Screw
20	01-6138-1	Pin
21	05-0003	Shelf, Single
22	13-3109-0-003	Thread Guide

* Assembly, Refer to Parts Index for Components

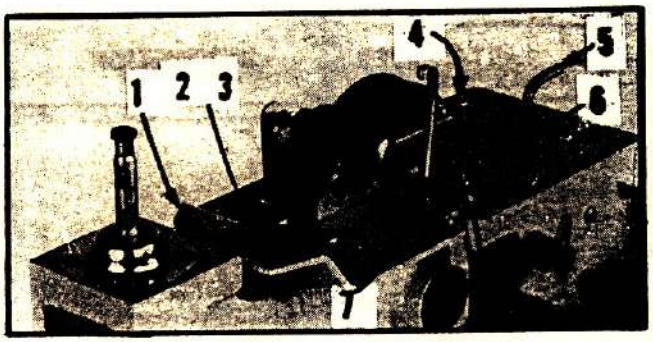

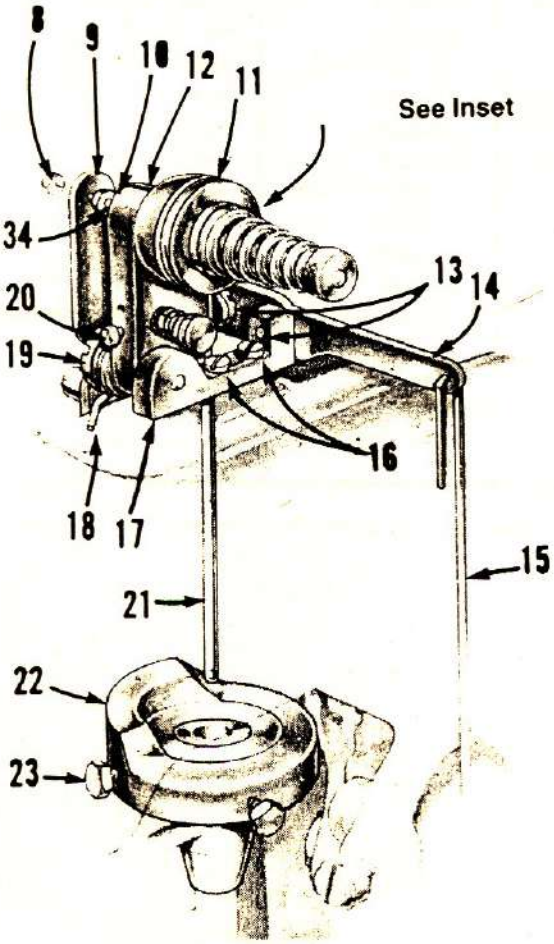

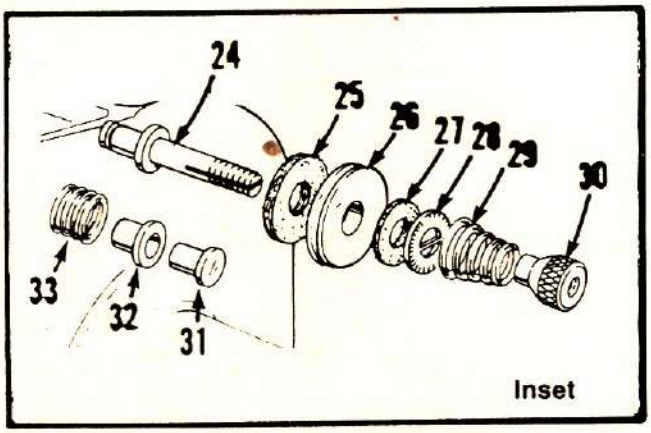

DET.	PART NUMBER	DESCRIPTION
1	13-1230-2	Plate
2	01-7626-0-001	Bushing
3	05-1120	Adhesive
4	01-2247	Screw
5	05-0043	Guide
6	01-3001	Nut
7	05-1105	Oil Inlet
8	01-3025	Nut
9	10-1178	Lever
10	01-2509	Screw
11	01-4074	Spacer
12	10-1158-1-050	Tension Arm Asm.*
13	01-1112	Screw
14	10-1177	Lever
15	10-1083	Link
16	01-2039	Screw
17	10-1159-1	Tension Bracket
18	01-5163	Spring
19	01-1114	Screw
20	01-2001	Screw
21	01-6334	Rod
22	10-1160	Cam
23	01-2362	Screw
24	01-1113	Stud
25	10-1077	Felt
26	10-1078-1	Roller
27	10-1004	Felt
28	10-1003	Washer
29	01-5603	Spring
30	10-4030	Nut
31	10-1008	Guide
32	10-1009	Bushing
33	01-5002	Spring
34	01-6499	Release Rod

* Assembly, Refer to Parts Index for Components

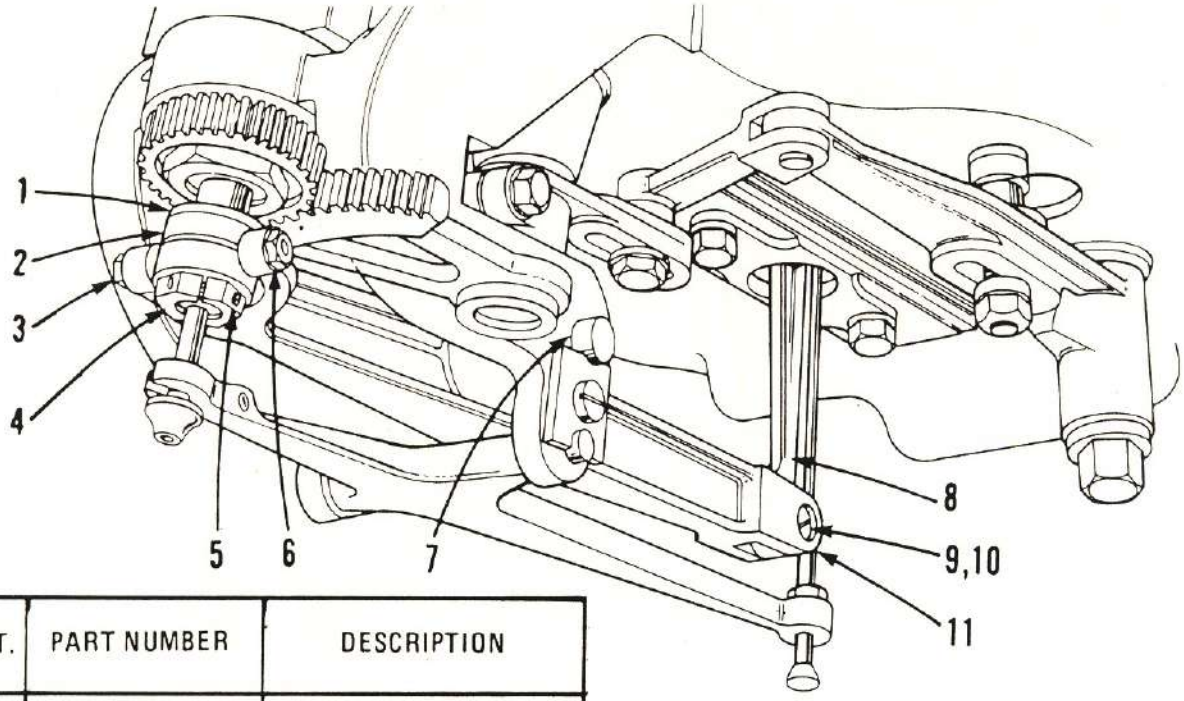

DET.	PART NUMBER	DESCRIPTION
1	01-4010	Washer
2	10-4024	Bearing Ring
3	01-3020	Nut
4	10-4023	Collar
5	01-2007	Clamp Screw
6	10-3007	Bearing
7	10-3005	Pivot Pin
8	10-1067	Looper Link
9	10-3008	Screw
10	01-3010	Nut
11	10-3006-0-150	Looper Lever
	10-3006-0-001	" " " (AF-CB-R-FE)
12	01-7041	Bushing
13	13-1236-1*	Take-Up Lever Asm.
14	01-5005	Spring
15	10-1057	Link
16	01-6831-0-002	Anchor
17	10-1122-0-997	Roll (.010")
	10-1122-0-998	Roll, No. 2
	10-1122-0-999	Roll, No. 1
	10-1122-0-017	Roll, X.A.F.
18	10-1064-1	Cam Follower
19	10-1066-1	Pivot Screw
20	10-1063	Timing Screw
21	10-1055	Pivot Screw
22	10-1062	Jam Plug
23	01-2063	Screw
24	10-1054	Pivot Bushing
25	01-2012	Screw
26	01-4751	Spacers
27	01-7630-0-001	Ball Bearing
28	13-1052-0-001	Stud
29	13-1053	Cotter Pin
30	10-1056	Clip

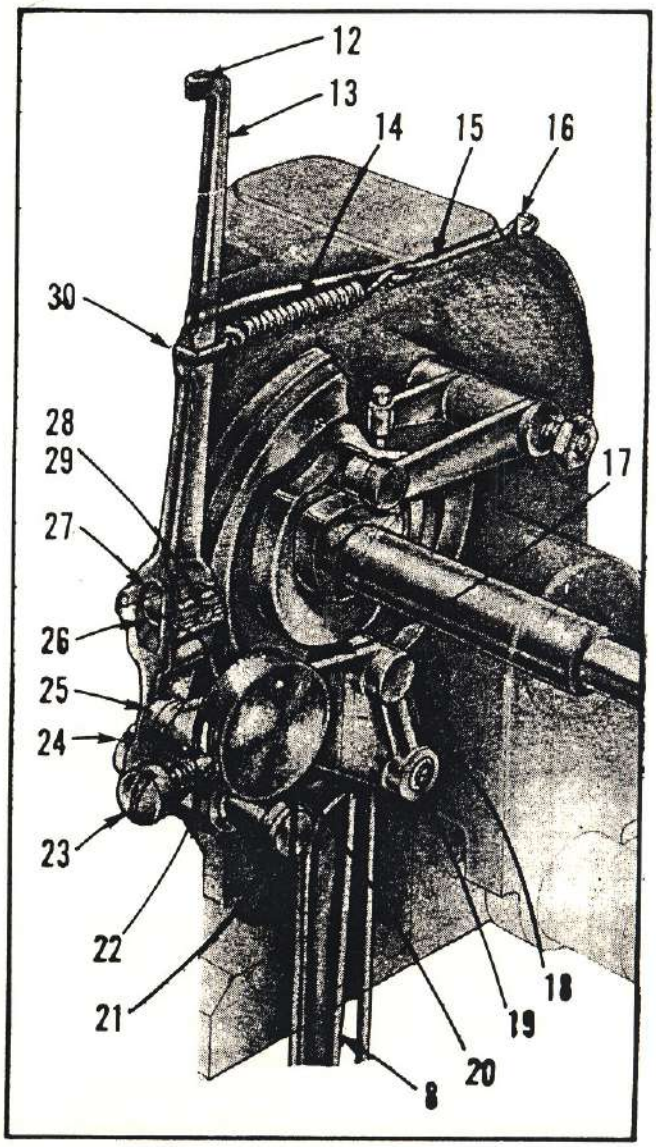

* Assembly, Refer to Parts Index for Components

FLYBAR CONTROL

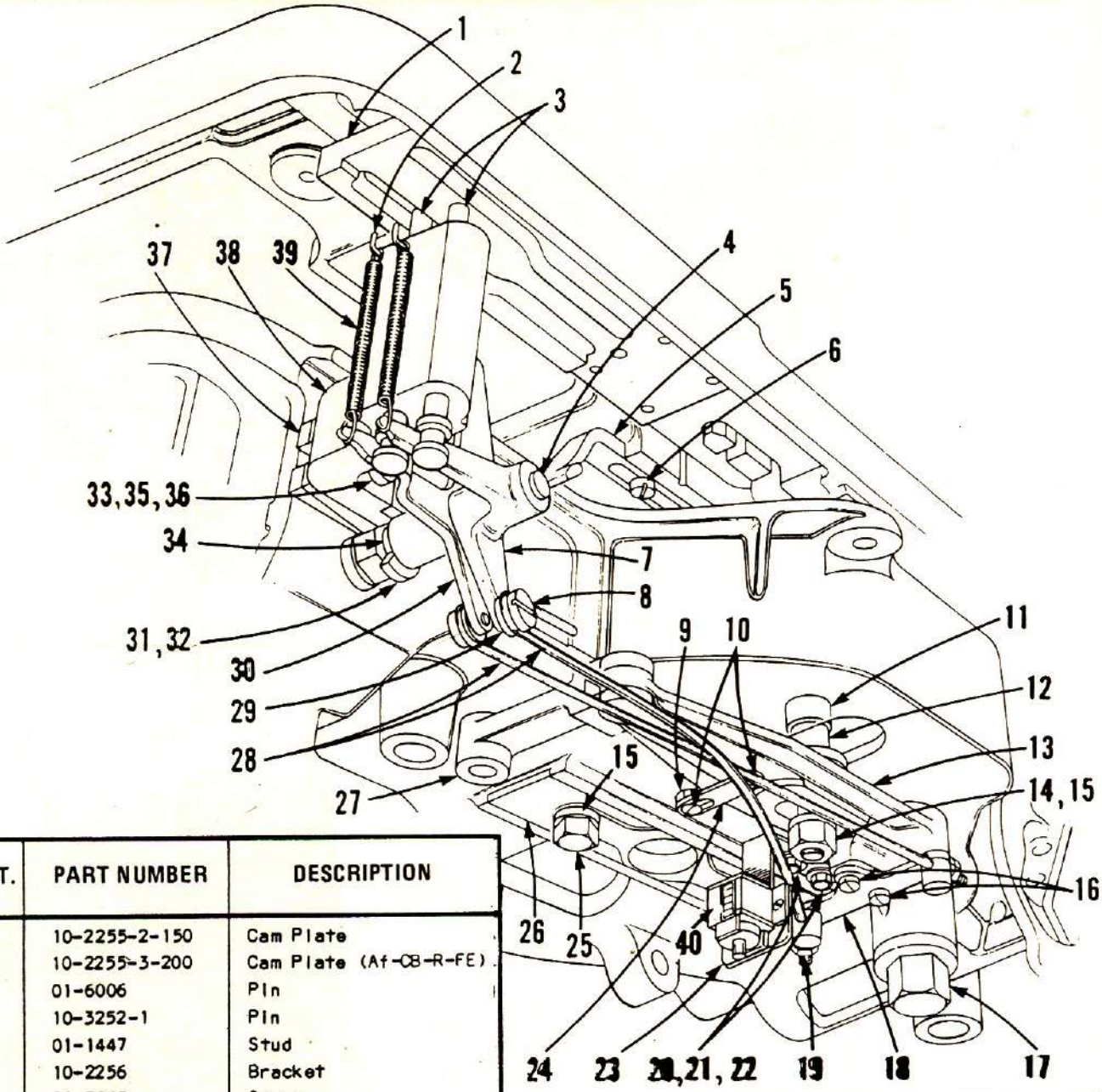

DET.	PART NUMBER	DESCRIPTION
1	10-2255-2-150	Cam Plate
	10-2255-3-200	Cam Plate (Af-CB-R-FE)
2	01-6006	Pin
3	10-3252-1	Pin
4	01-1447	Stud
5	10-2256	Bracket
6	01-2043	Screw
7	10-3254	Pin Actuator
8	01-1432	Screw
9	01-3414	Lock Nut
10	01-1423	Screw
11	10-3018	Roll
12	10-3017	Stud
13	10-3015-0-250	Sector Lever
14	01-3013	Nut
15	01-4005	Washer
16	01-2079	Screw
17	10-3016	Stud
18	10-3258	Bracket
19	01-3016	Nut
20	01-2973	Screw
21	01-4577	Lockwasher
22	01-4559	Washer
23	13-3129-1	Counter Mounting Bracket
24	13-3128	Connecting Link
25	01-2031	Screw
26	10-3027	Plate
27	10-3012	Link
28	10-3259-1	Wire Rod
29	01-4472	Washer
30	10-3253	Pin Actuator
31	10-3262-0-250	Lever
32	01-2006	Screw
33	01-2088	Screw
34	10-3257	Spacer Washer
35	01-4046	Lockwasher
36	01-6031	Taper Pin
37	10-3250-1	Spacer Wedge
38	10-3251-1	Bracket
39	01-5054	Spring
40	13-3130	Counter
41	01-4005	Washer

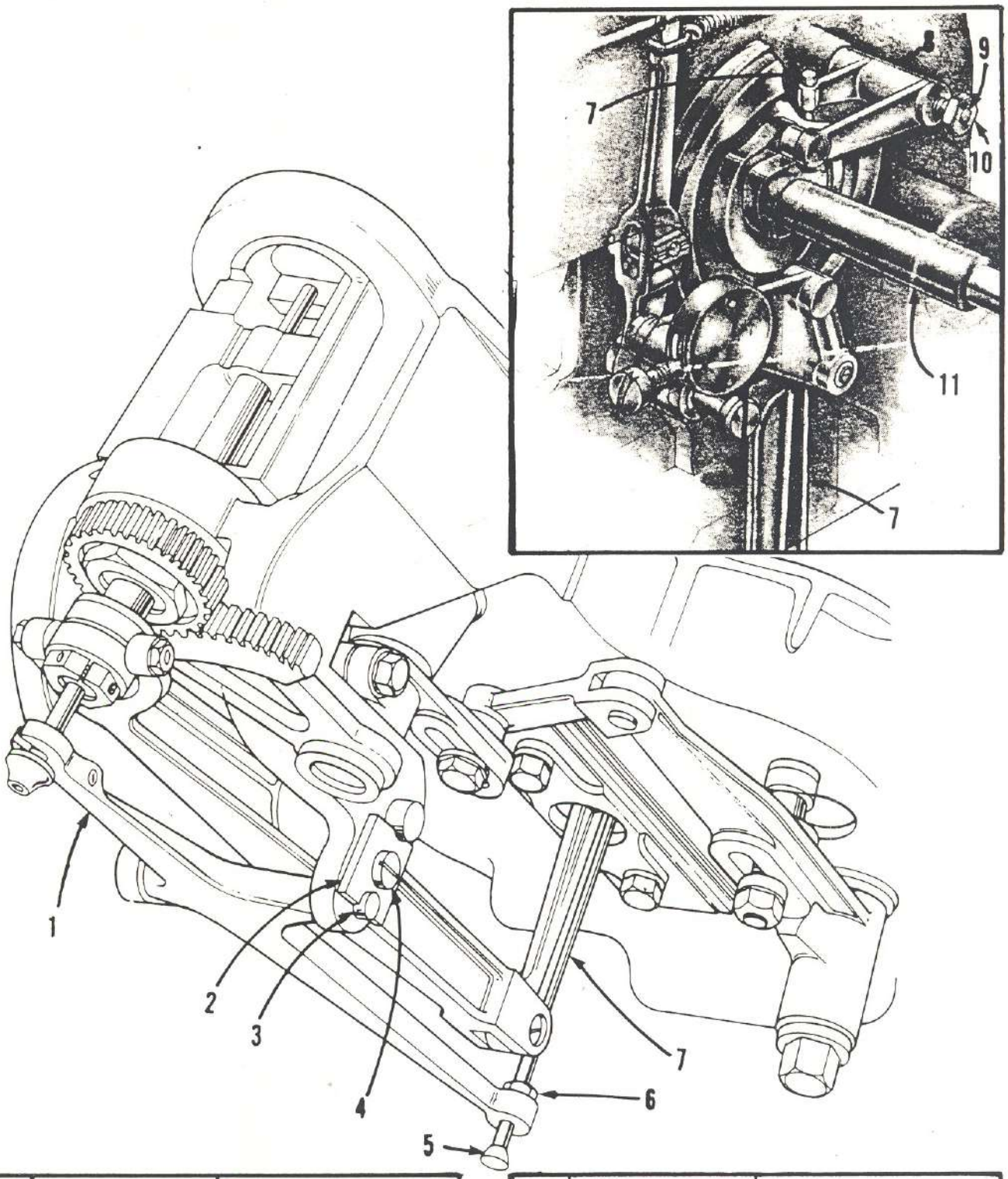

DET.	PART NUMBER	DESCRIPTION
1	10-3004	Spreader Lever
2	10-3002	Locking Plate
3	10-3003	Pivot Pin
4	01-2041	Screw
5	10-1061-1	Ball Tip
6	01-3025	Nut
7	10-1060-2	Spreader Link
8	10-1058	Spreader Cam Follower
9	10-1059	Pivot Pin
10	01-3005	Nut
11	13-1091-2-050*	Stitch Cam Asm.

* Assembly, Refer to Parts Index for Components

RACE

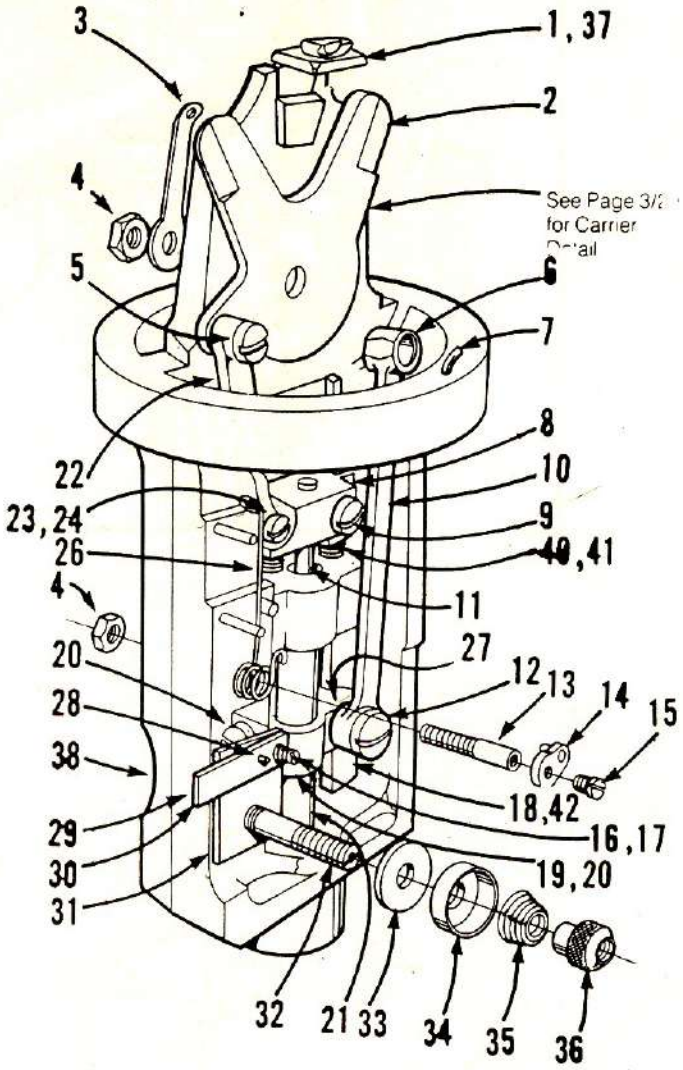

DET.	PART NUMBER	DESCRIPTION
1	10-4012-0-001	Throat Plate (AF-CA-RE)
	10-4012-0-004	" " " (AF-CB/CA- R-RE)
2	10-4011	Spreader Wedge, (C.B.CB/CA)
	10-4011-0-150	Spreader Wedge, (C.A.)
3	10-4035	Cord Guide
4	01-3005	Nut
5	10-4017	Screw
6	01-7022	Bushing
7	01-6002	Pin
8	10-4018	Spreader Crosshead
9	01-2059	Screw
10	10-4013	Looper Link
11	10-4020	Spreader Spindle
12	01-1006	Screw
13	10-4037	Stud
14	10-4036-0-001	Spring Arm
15	01-2081	Screw
16	10-4034	Screw
17	01-5004	Spring
18	10-4026	Guide Plate
19	10-4021	Looper Crosshead
20	01-2024	Screw
21	10-4022	Looper Spindle
22	10-4015	Spreader Link
23	10-4016	Screw
24	01-4012	Washer
25	01-5027	Spring
26	01-4013	Washer
27	01-6003	Pin
28	10-4033-0-050*	Tension Plate Asm.
29	10-4028	Tension Plate
31	10-4033	Plate
	10-1077	Plate (for AF-CB-R-FE)
32	10-4029	Stud
	10-4218-0-200	Stud (for Af-CB-R-FE)
33	10-4032	Thin Disc
	10-1078	Thin Disc (for AF-CB-R- FE)
34	10-4031	Heavy Disc
35	01-5028	Spring
36	10-4030	Nut
37	01-2056	Screw
38	10-4001-0-200	Race, Cut-Before
	10-4001-1-150	Race, Cut After.
	10-4001-1-200	Race, (AF-CB-R-FE)
40	10-4019	Plunger
41	01-5026	Spring
42	01-2013	Spring

* Assembly, Refer to Parts Index for Components

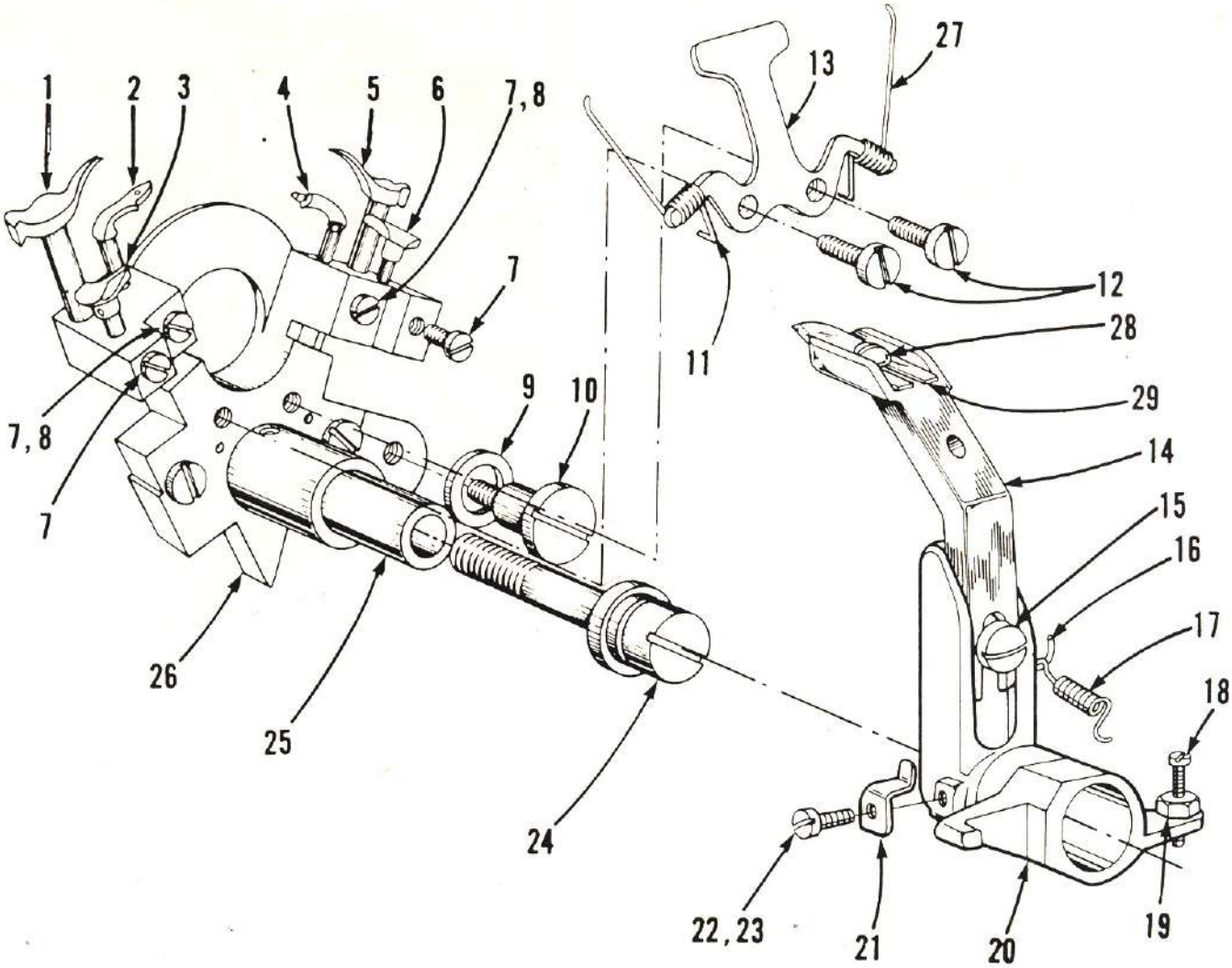

DET.	PART NUMBER	DESCRIPTION
1	10-4009	Spreader, L.H.
2	10-4005-2	Eye Looper
3	10-4007	Spreader, L.H.
4	10-4004	Blind Loop
5	10-4008	Spreader, R.H.
6	10-4006	Spreader Stop, R.H.
7	01-2001	Screw
8	10-4039	Felt Pad
9	01-4013	Washer
10	01-1006	Screw
11	01-5620	Spring, L.H.
12	01-2073	Spring, R.H.
13	10-4010-2	Needle Guard
14	10-1198-1	Knife Holder
15	01-2081	Screw
16	01-6002	Anchor
17	01-5041	Spring
18	01-2361	Screw
19	01-3025	Nut
20	10-4202	Knife Holder
21	10-4203	Retaining Ring
22	01-2318	Screw
23	01-4015	Washer
24	10-4201	Stud (C.B.)
25	10-4003	Bushing
26	13-4002-1	Looper Carrier
27	01-5619	Spring, Right
28	01-2667	Screw
29	10-1197-1	Knife

DET.	PART NUMBER	DESCRIPTION
1	10-2251-1	Length Plate (Reg. Travel)
	10-2251-1-017	Length Plate (Long Travel)
2	01-4006	Washer
3	10-2254-1	Wing Bolt
4	10-2262	Block
5	10-2263	Link
6	01-2131	Screw
7	10-2264	Rail
8	01-2175	Screw
9	10-2069	Trip
10	01-7435	Collar
11	10-3084	Shaft
12	01-2077	Screw
13	01-3005	Nut
14	01-5038	Spring
15	01-2171	Screw
16	10-3088	Clamp
17	01-2144	Screw
18	10-3089-1	Latch
19	01-5433	Spring
20	01-6528	Pivot
21	01-6368	Retaining Ring
22	10-3087-1	Actuator
23	10-3203	Stop
24	10-3086	Lever
25	10-3085-0-050*	Lever Asm.
26	10-3205	Clevis
27	01-6015	Pin
28	01-3016	Nut
29	01-2194	Screw
30	10-3206	Actuator

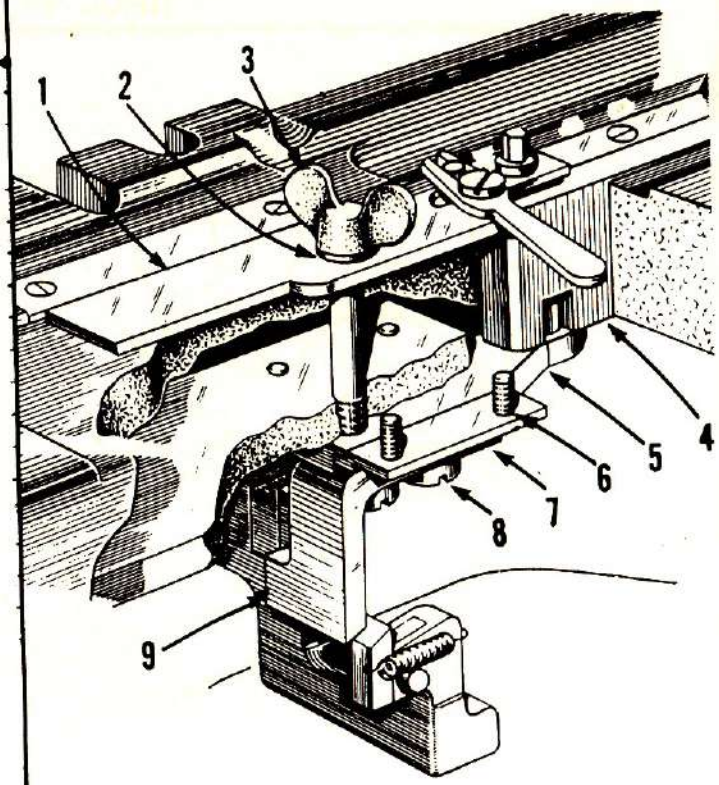

* Assembly, Refer to Parts Index for Components

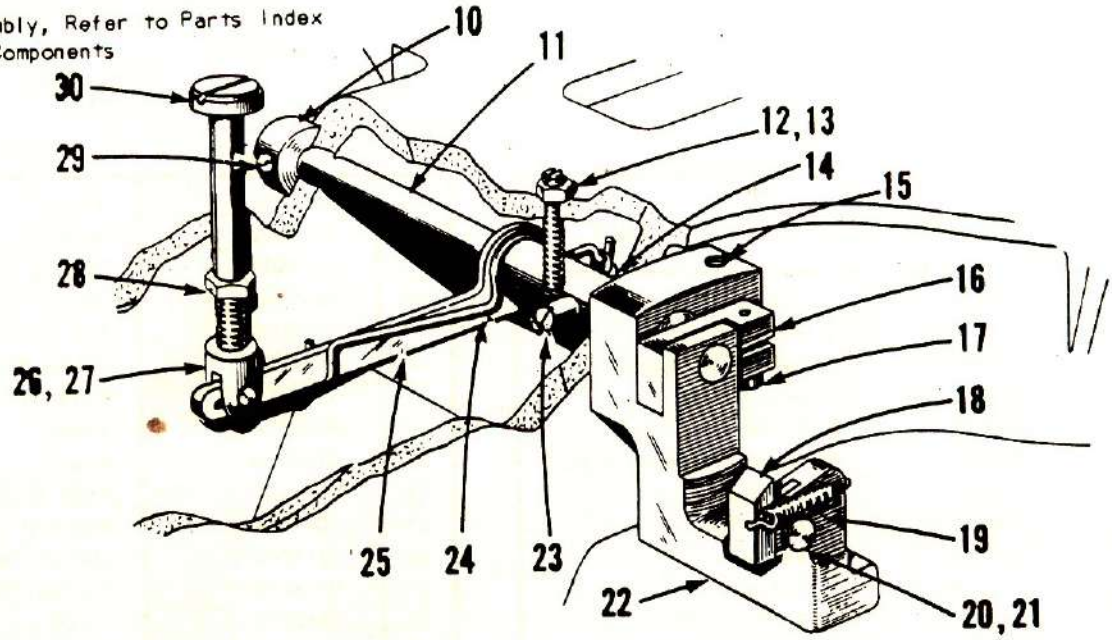

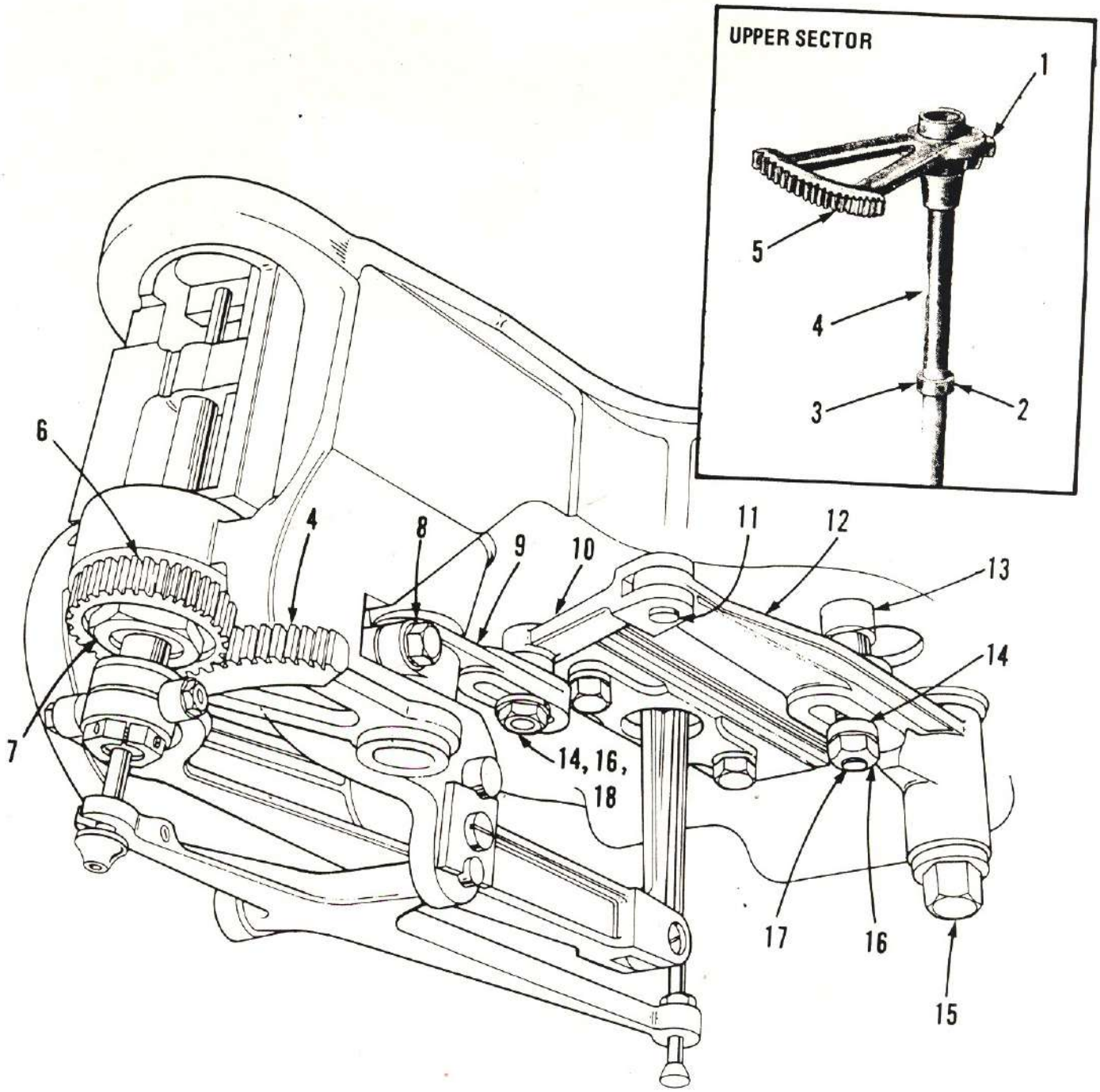

DET.	PART NUMBER	DESCRIPTION
1	01-2014	Screw
2	10-3010	Collar
3	01-2028	Screw
4	10-3009	Lower Sector and Shaft
5	10-1075-1	Upper Sector
6	10-4025	Gear
7	01-3018	Nut
8	01-2016	Screw
9	10-3011	Lever
10	10-3012	Link
11	10-3026	Stud
12	13-3015-0-250	Sector Lever
	10-3015-2	Sector Lever (CT)
13	10-3018	Roll
14	01-4005	Washer
15	10-3016	Stud
16	01-3013	Nut
17	10-3017	Stud
18	10-3013	Stud

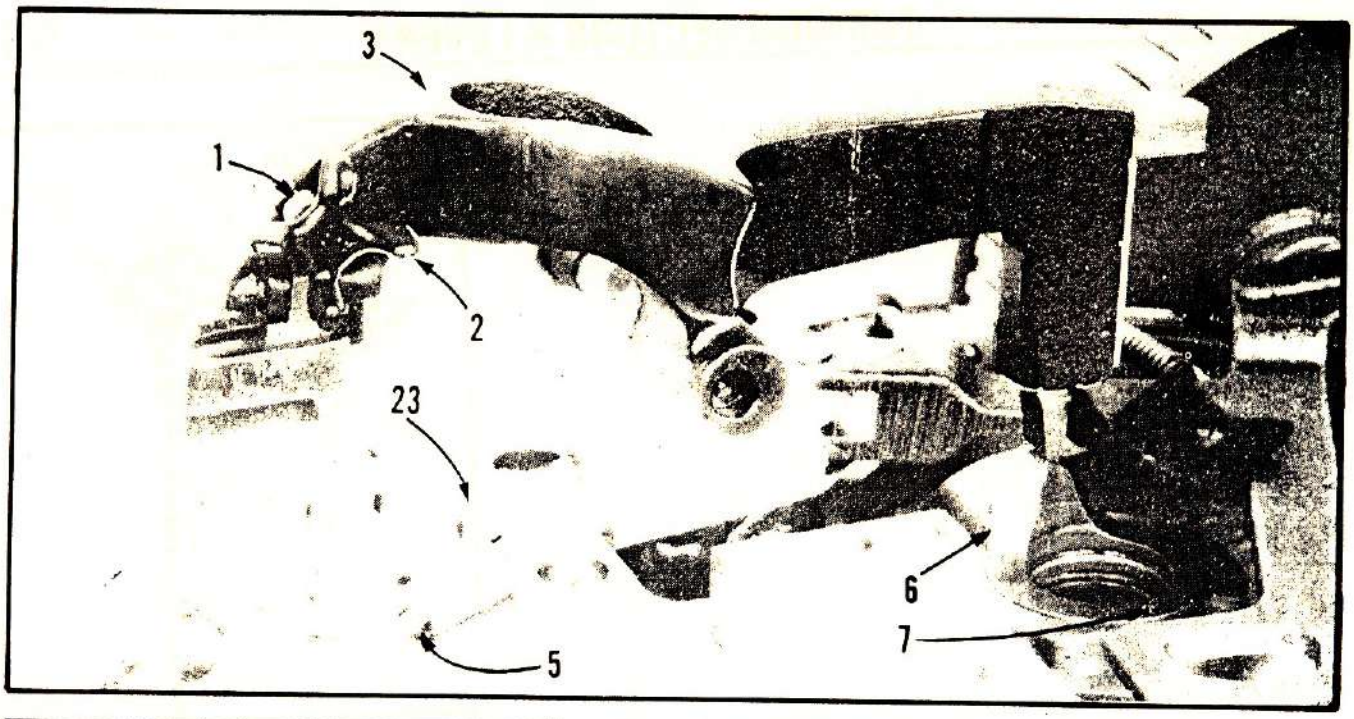

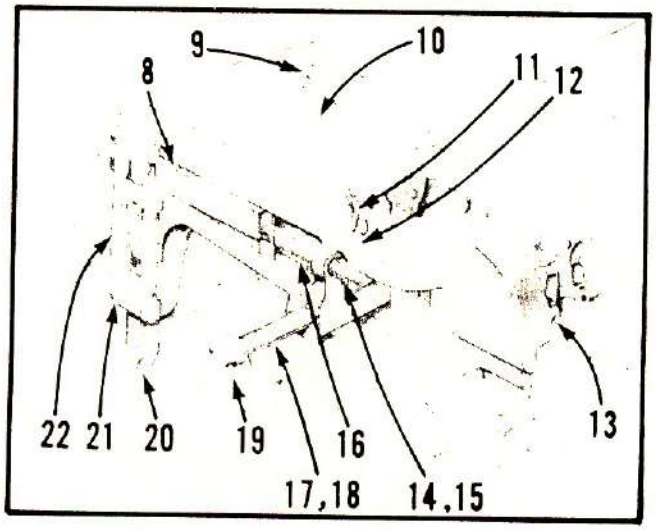

DET.	PART NUMBER	DESCRIPTION
1	10-1163	Clamp (C.A.)
2	01-1023	Screw
3	10-1068-1-050*	Cutting Lever Asm.
	10-1068-0-004	Cutting Lever
	10-1154-0-050	Cutting Lever (for AF-CB-R-FE)
5	01-2018	Screw
6	10-3062-1	Cutting Cam
7	10-3063-1	Pin
8	10-1072	Pressure Bar
9	01-6560	Anchor
10	01-5006	Spring
11	10-1146	Link
12	01-6006	Anchor
13	01-6837	Pin
14	01-3001	Nut
15	01-4001	Washer
16	01-5061	Spring
17	10-1074	Pivot Stud, Left
18	10-1074-0-250	Pivot Stud, Right
	10-1074	Pivot Stud, Right (CT)
19	01-3006	Nut
20	10-1071-1	Cutting Cam Follower
	10-1071-0-023	Cutting Cam Follower (for CB/CA)
21	01-2013	Screw
22	10-1073-1	Cover Plate
23	01-2038	Screw

* Assembly, Refer to Parts Index for Components

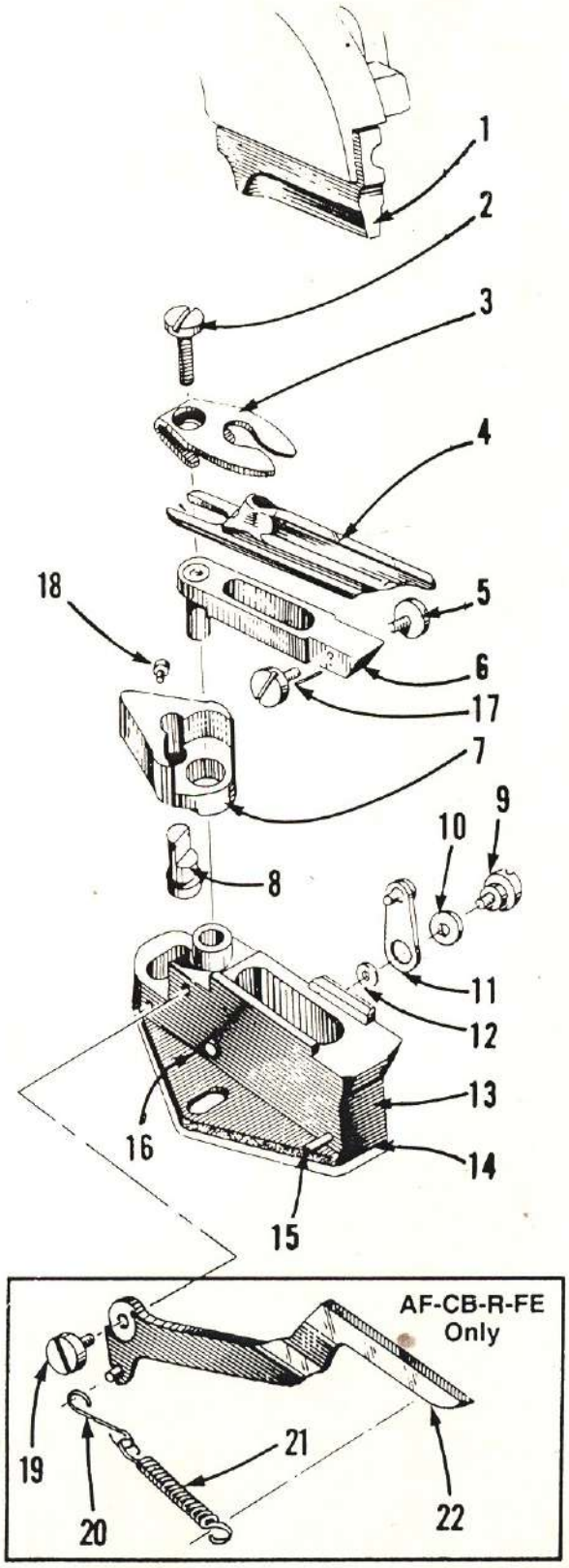

DET.	PART NUMBER	DESCRIPTION
1	10-1069-0-005	Cutting Steel
	10-1069-0-007	Cutting Steel
	10-1069-0-016	Cutting Steel
	10-1069-0-075	Cutting Steel (AF-CB-R-FE)
	10-1069-0-077	Cutting Steel, " "
	10-1069-0-077	Cutting Steel, " "
	10-1069-0-087	Cutting Steel, " "
2	01-2039	Screw
3	10-3074-0-011	Cloth Lifter (L.T.)
4	10-1072-0-023	Knife (1"-1-1/4" N.E.)
	10-1072-0-024	Knife (1"-1-1/4" R.E.)
	10-1072-0-033	Knife (AF-CB-R-FE)
5	01-2102	Screw
6	10-3071-0-250	Knife Pad
	10-3071-1-250	Knife Pad (AF-CB-R-FE)
7	10-3067-4-254	Spreading Block
	10-3067-1-254	Spreading Block (AF-CB-R-FE)
8	10-3218	Stud
9	01-1130	Screw (C.A. only)
10	01-4003	Washer
11	01-5173	Spring
12	01-4029	Washer
13	10-3070-0-250	Knife Holder
14	10-1075-1-992	Shim (.016")
	10-1075-1-993	Shim (.005")
15	01-6005	Anchor Pin
16	01-6328	Stop Pin
17	01-6036	Pin
18	01-2001	Screw
19	01-1131	Screw (AF-CB-R-FE)
20	10-3261	Link (" ")
21	01-5029	Spring (" ")
22	10-3260-1	Cloth Lifter

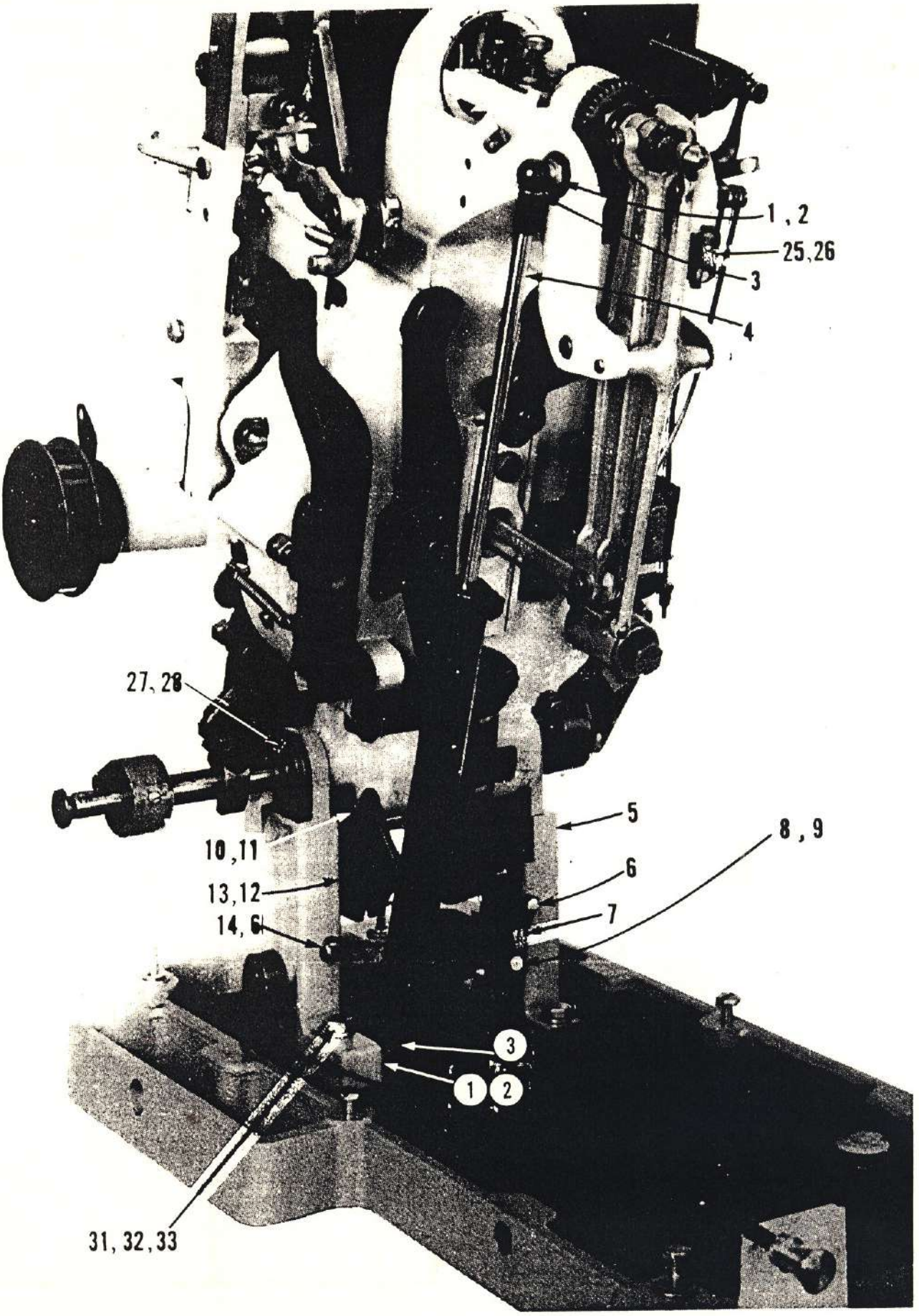
1 , 2
25,26
3
4
27, 28
5
8 , 9
10,11
6
13,12
7
14, 6
3
1
2
31, 32, 33

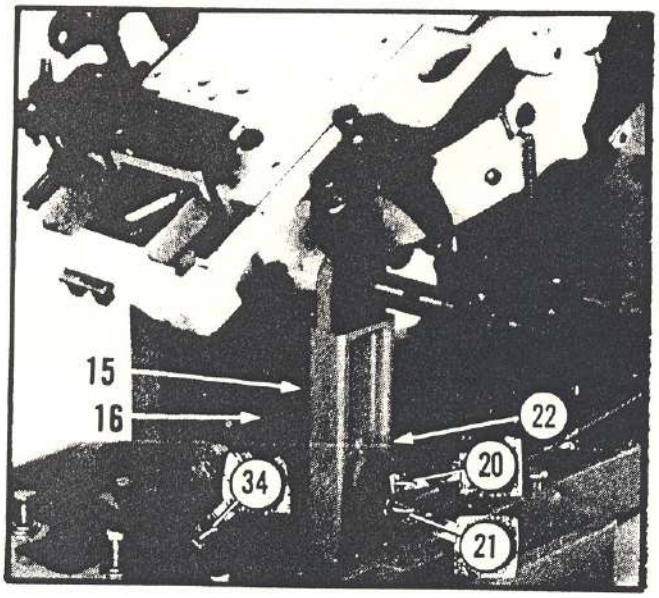

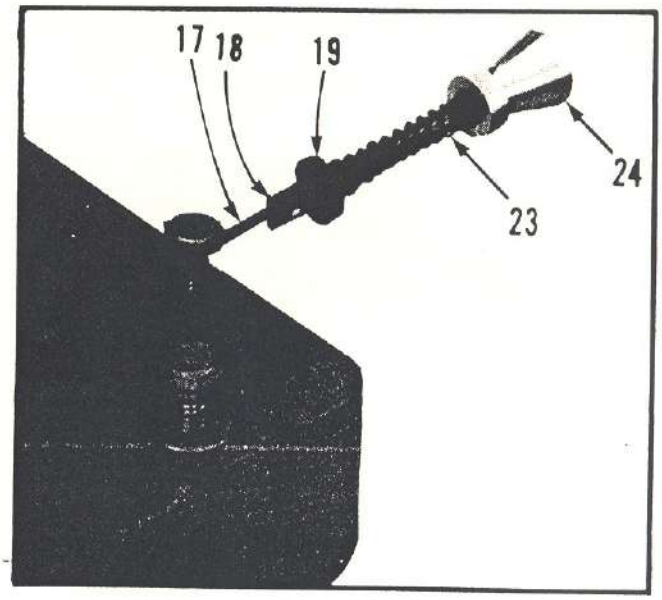

DET.	PART NUMBER	DESCRIPTION
1	07-0086-0-001	Stud Ball
2	01-4701	Washer
3	07-0087-0-001	Retainer
4	07-0302-1	Gas Spring
5	13-3102	Bracket (R.H.)
6	01-2247-0-002	Screw
7	13-3109-0-002	Thread Guide
8	01-7447	Guide
9	01-6551	Ring Retainer
10	01-2872-0-400	Screw
11	01-4528-0-006	Washer
12	13-3107-1	Sector
14	13-3127	Cord Guide
15	01-5602	Spring
16	13-3103	Sector Arm
17	13-5024	Extension Link
18	13-5025-1	Link
19	01-4002	Washer
20	01-6569-0-002	Pin
21	13-3104	Link
22	13-3102-0-001	Support (L.H.)
23	01-5061	Spring
24	04-1791	Knob
25	13-3099	Striker
26	01-2782-0-002	Screw
27	13-3106-0-001	Bushing, L.H.
28	13-3106-0-002	Bushing, R.H.
30	01-4746	Washer
31	01-2877-0-003	Screw, front
32	01-2877	Screw, rear
33	01-4581	Lockwasher
34	04-1712	Cap Plug

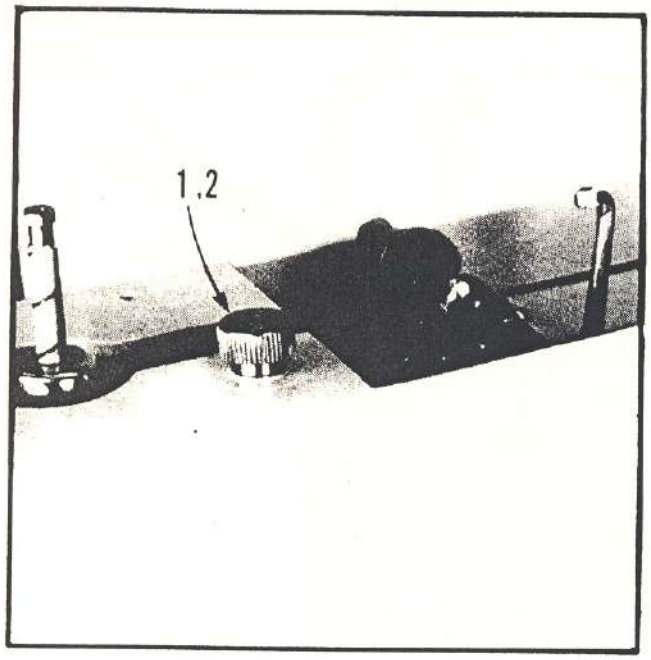

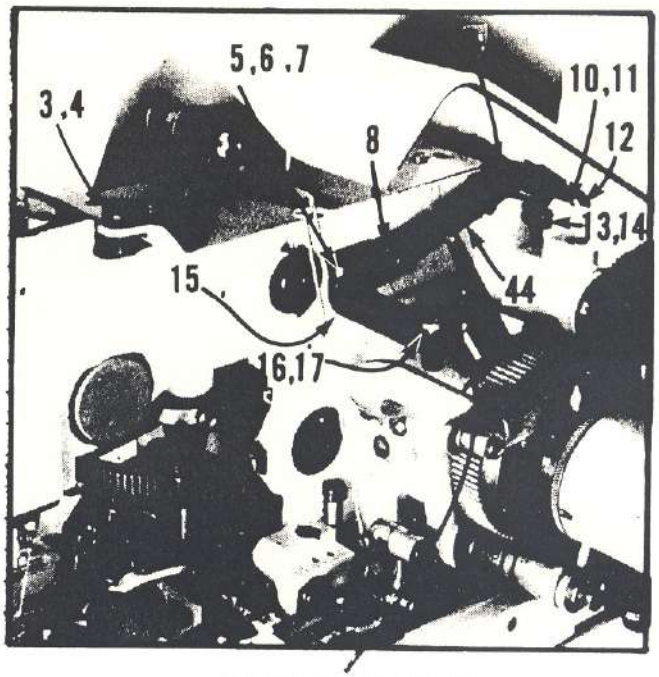

45, 46, 11, 47, 48, 50

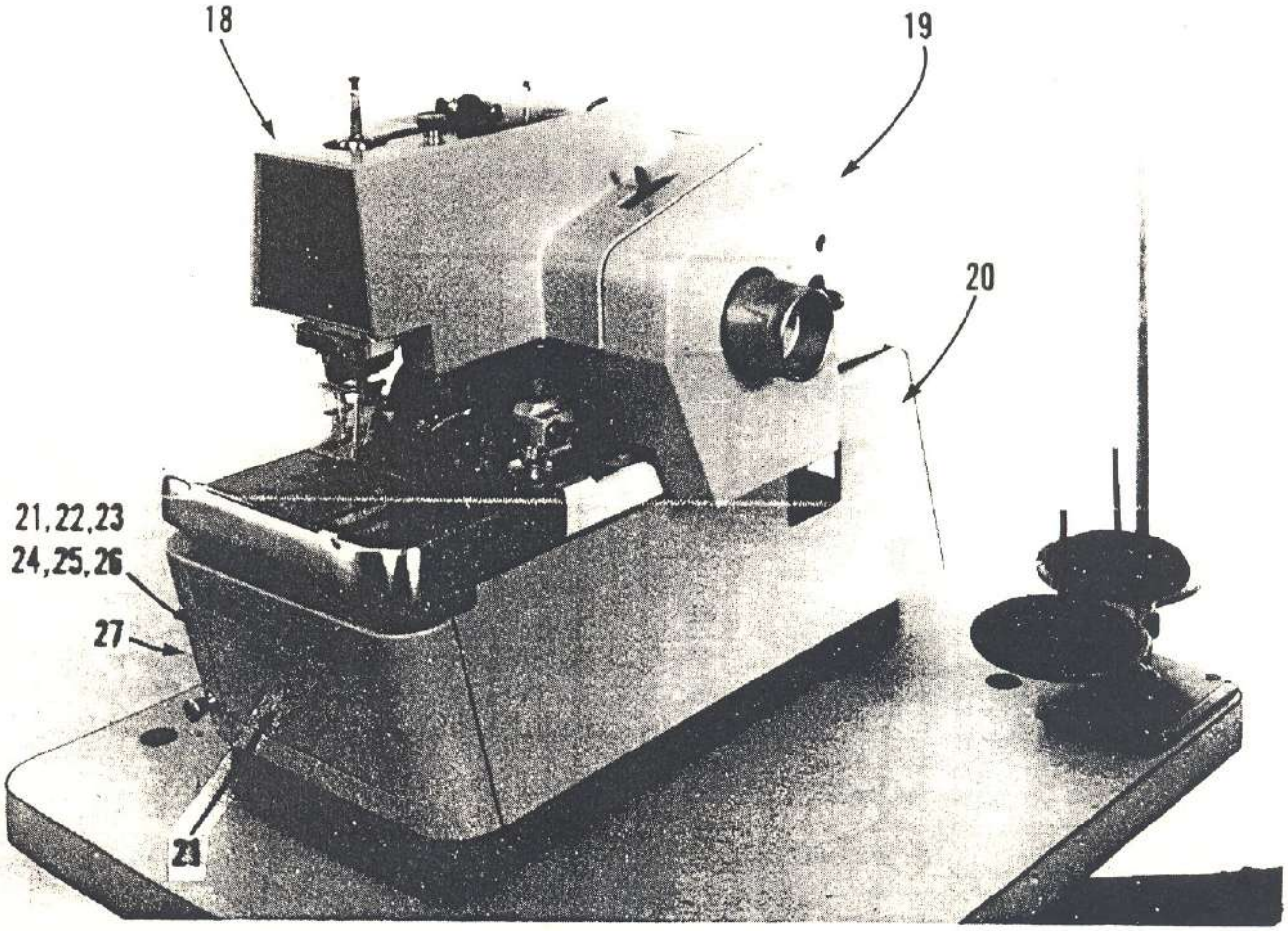

DET.	PART NUMBER	DESCRIPTION
1	13-0511-3	Screw
2	01-4777	Washer
3	01-7626-0-001	Bushing
4	05-1120	Adhesive
5	01-4412	Washer
6	01-1728-0-401	Screw
7	01-4672-0-301	Lock Washer
8	13-0513-1	Stud
9	01-1453	Screw
10	01-4406	Lock Washer
11	01-2241-0-002	Screw
12	13-0530	Hinge
13	01-7625	Bushing
14	01-1480	Screw
15	13-0508-1	Bracket
16	01-4549	Washer
17	01-2732-0-300	Screw
18	13-0525-0-003	Head Cover
19	13-0523-0-002	Rear Cover (R.H.)
20	13-0527-0-001	Base Side Cover (R.H.)
21	13-5031-1	Front Base Panel
22	13-5032-1	Clip
23	01-2247	Screw
24	01-4528	Lock Washer
25	13-5033-0-001	Gasket
26	13-5033-0-002	Gasket
27	13-5029-1	Front Base Panel
28	13-5030-0-001	Base Panel Back
29	01-2845	Screw
30	01-4578	Lock Washer
31	01-4579	Washer
32	13-5021-1	Base
33	01-2247-0-002	Screw
37	04-1283-0-001	Swivel Guide
38	01-3406	Nut
39	13-5027-1	Pad
40	01-4579-0-004	Washer
41	01-2886-0-006	Screw
42	01-1728-0-406	Screw
43	01-1728-0-402	Screw (not shown)
44	13-0514-1	Latch
45	13-0519	Tubing
46	04-1223-0-002	Clamp
47	05-1086	Epoxy
48	01-4411	Washer
49	05-1130	Name Plate
50	01-4571	Lock Washer
51	13-5015	Pad, Acoustic
52	13-5014	Waste Tray

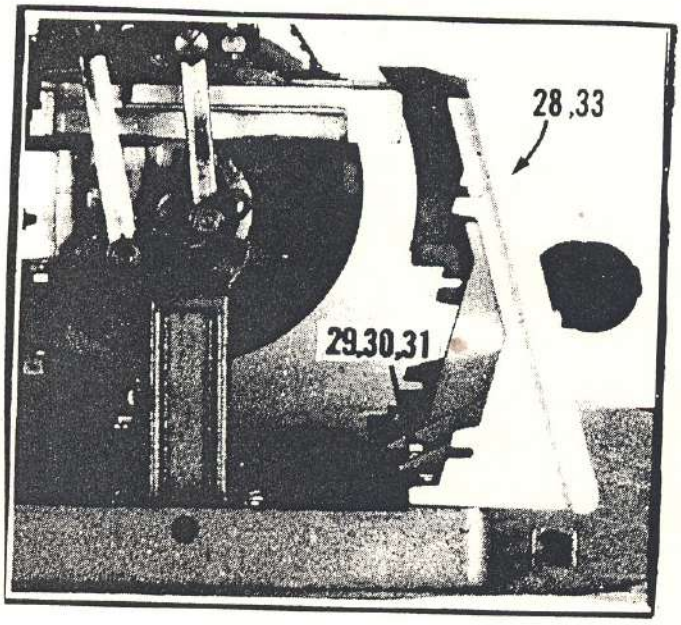

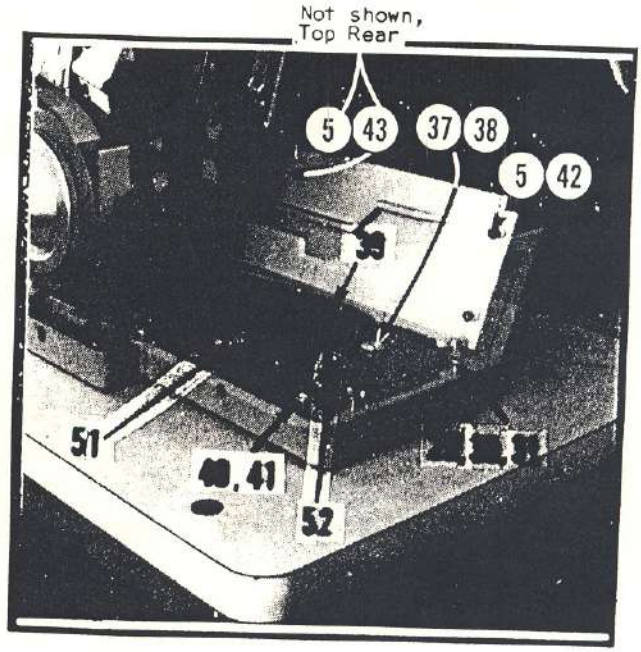

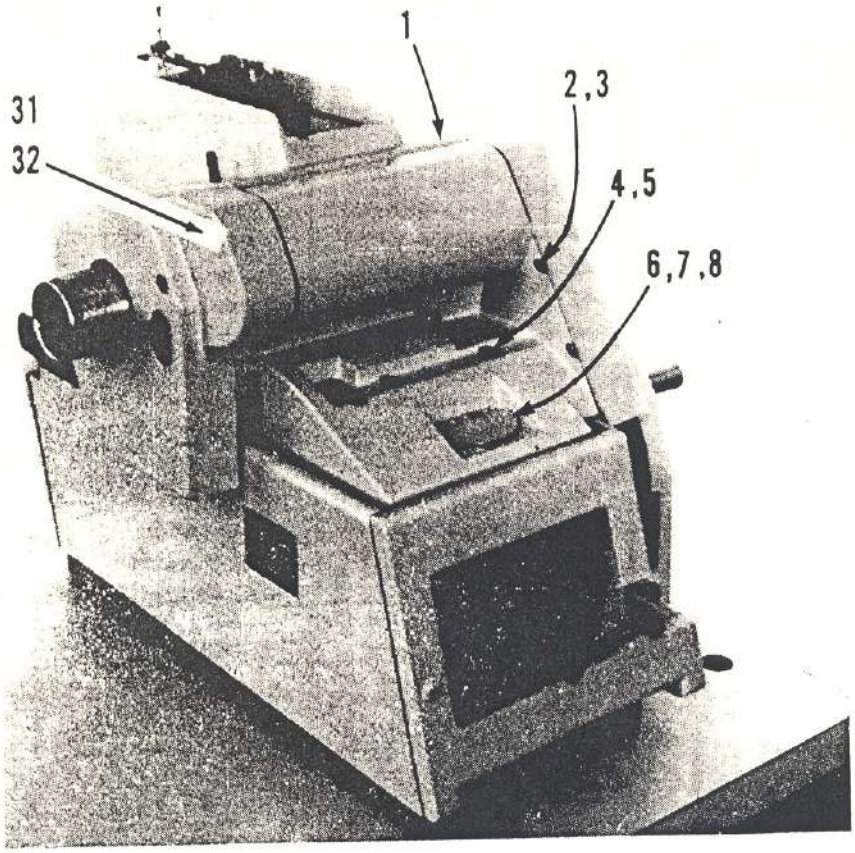
1
2,3
31
32
4,5
6,7,8

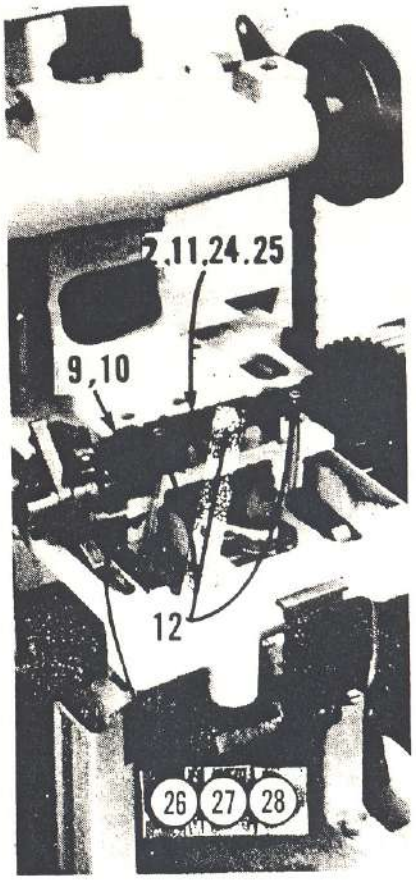
2,11,24,25
9,10
12
26
27
28

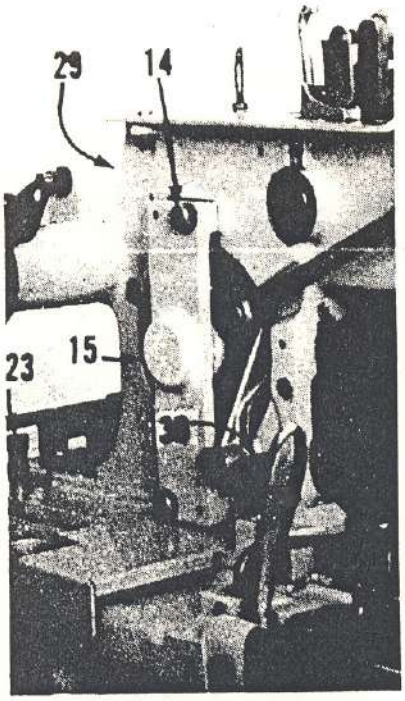
29
14
23
15

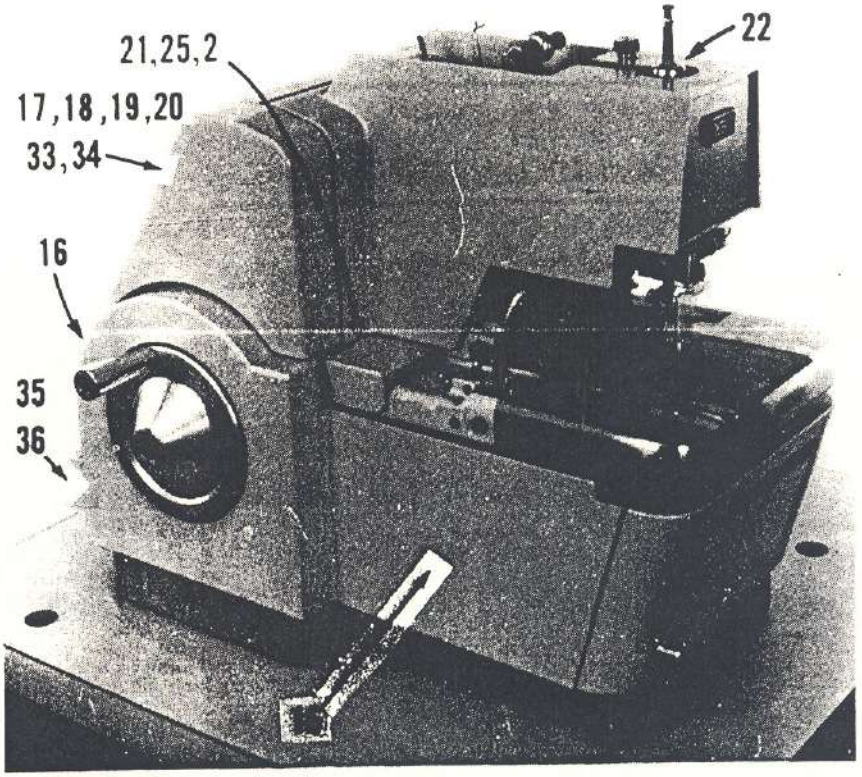
21,25,2
22
17,18,19,20
33,34
16
35
36

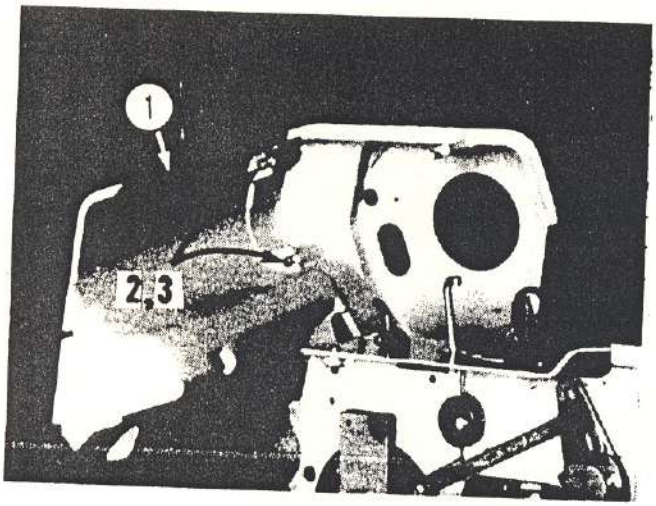

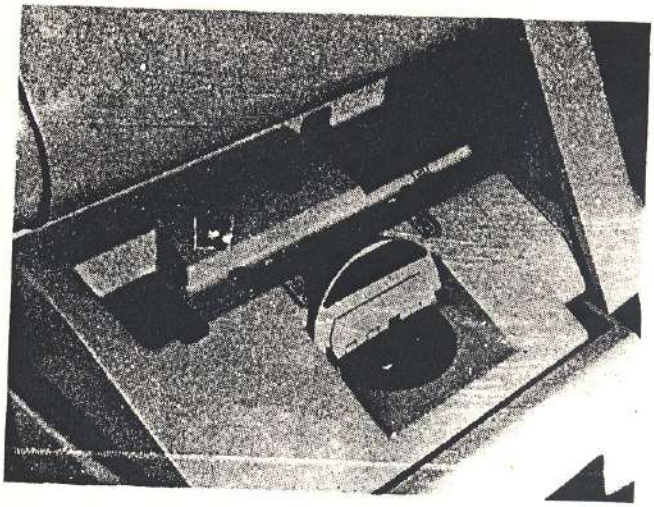

DET.	PART NUMBER	DESCRIPTION
1	13-0522-0-002	Head Center Cover
2	01-4412	Washer
3	01-1728-0-401	Screw
4	01-4549	Washer
5	01-2732-0-300	Screw
6	13-0517-1	Cover
7	01-2246-0-001	Screw
8	01-4673	Lockwasher
9	05-1120	Adhesive
10	01-7627-0-001	Bushing
11	13-0512-1	Bracket
12	13-0534	Oil Inlet
14	01-1686-0-001	Screw
15	13-1188	Cam Support
16	13-0526-0-002	Base Side Cover, L.H.
17	13-0524-0-003	Rear Cover, (L.H.)
18	13-0528-0-001	Bracket (L.H.)
19	01-1739-0-101	Screw (Bracket to Head)
20	05-1096	Loctite 242-31
21	13-0516	Guard
22	13-0525-0-003	Head Cover
23	10-1129-1	Long Dowel
24	01-4672-0-303	Screw
25	01-2816-0-300	Screw
26	04-2040	Tubing (4.5")
27	13-0521	Tubing
28	05-1086	Epoxy
29	13-1001-0-050	Head
30	10-1128	Short Dowel
31	01-2247-0-004	Screw
32	01-4781-0-701	Washer
33	01-2260-0-603	Screw
34	01-4781-0-701	Washer
35	01-2260-0-004	Screw
36	01-4781-0-701	Washer

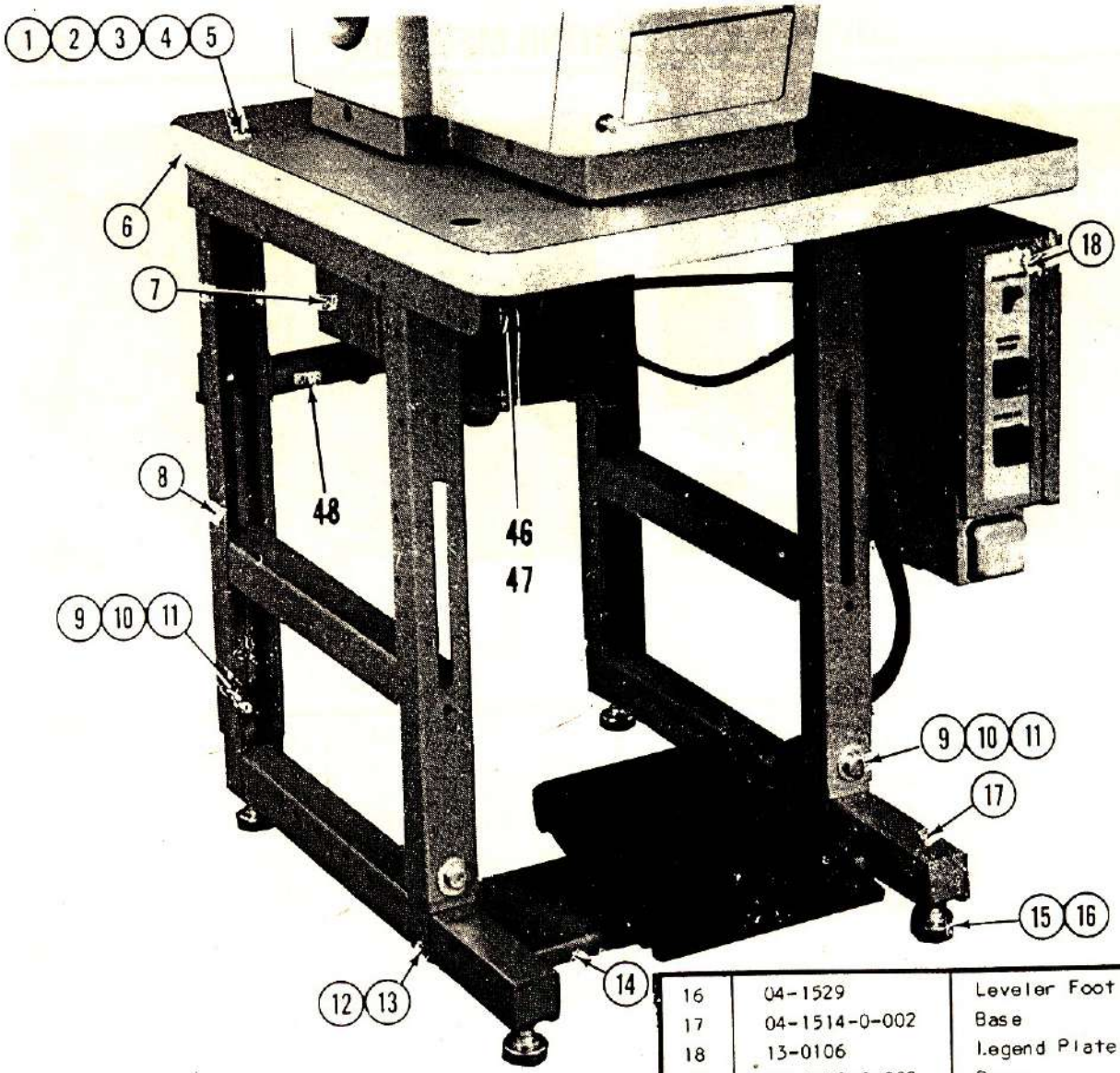

DET.	PART NUMBER	DESCRIPTION
1	04-1061	Nut
2	01-4422	Lockwasher
3	01-3406	Nut
4	01-2607	Screw
5	01-4043	Washer
6	04-1554-2	Table Top (Standard)
	04-1555-2	Table Top (Narrow)
7	04-1549	Belt Guard
8	04-1510-0-002	Leg
9	01-4727	Washer
10	01-2292-0-001	Screw
11	04-1522	Nut Plate
12	01-2444	Screw
13	04-0301	Block
14	04-1515-0-001	Foot Rail (Standard)
	04-1521-0-001	Foot Rail (Narrow)
15	01-3551	Nut
16	04-1529	Leveler Foot
17	04-1514-0-002	Base
18	13-0106	Legend Plate
19	01-2877-0-002	Screw
20	01-3549	Nut
21	01-4581	Lockwasher
22	01-1663-0-004	Bolt
23	01-4400-0-001	Washer
24	01-4748-0-002	Spacer (Standard)
	01-4748-0-001	Spacer (Narrow)
25	01-4749	Washer
26	04-1551-0-001	Bushing
27	01-4004	Lockwasher
28	01-3057	Nut
29	01-2871	Screw
30	01-2640	Screw
31	04-1548	Nut Plate
32	01-2830	Screw
33	04-0057-2	Gimp Guide Insert
	01-6673-0-001	Retaining Ring
34	01-4578	Lockwasher
35	01-4579	Washer
36	06-0173	Power Cord, (3 Phase)
	06-0136	Power Cord, (Single Phase)

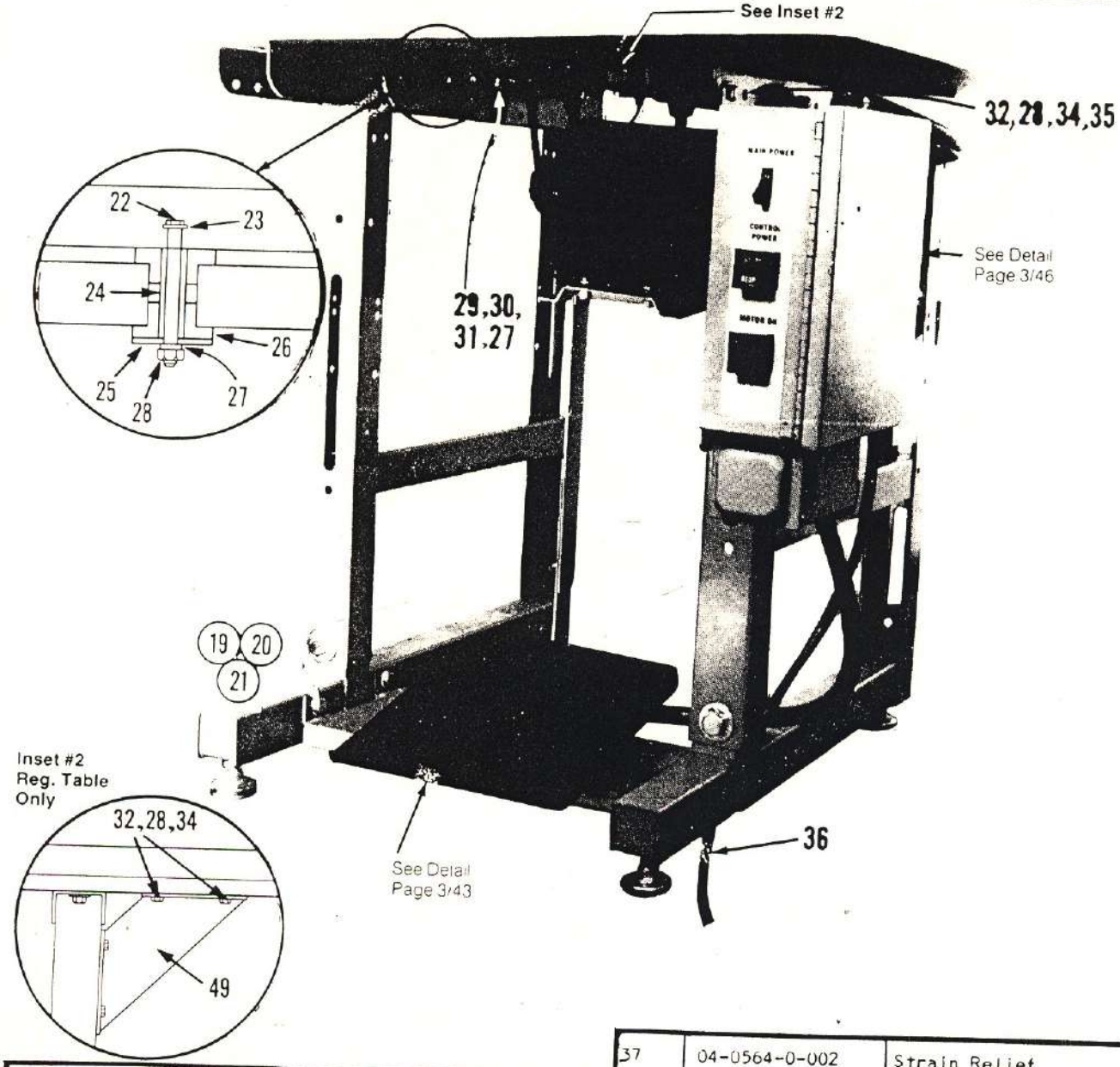

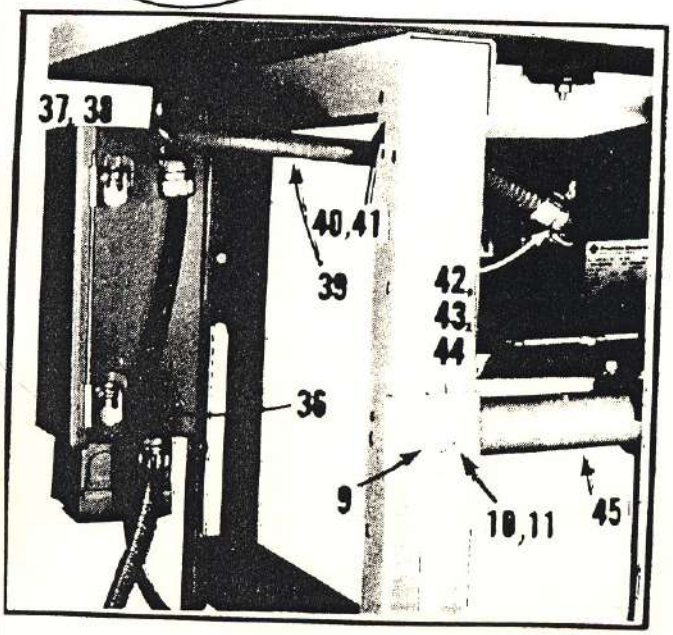

37	04-0564-0-002	Strain Relief
	04-0564-0-001	Strain Relief
38	04-0084-0-802	Conduit Nut
39	13-0102	Table #1 (Single Phase) Reg. Table
	13-0118	Table,3 Phase, Reg. Table
	13-0119	Table, Single, Narrow
	13-0113	Table, 3 Phase, Narrow
40	01-2096-0-001	Screw
41	01-4750	Washer
42	04-0086	Connector
43	13-0102-0-001	
44	30-0278	Terminal
45	04-1513-0-001	Motor Rail (Standard)
	04-1520-0-001	Motor Rail (Narrow)
46	04-1518-0-001	Drawer
47	01-2616	Screw
48	04-1513-0-001	Motor Rail, (Reg. Table)
49	04-0241-0-001	Corner Brake

TABLE—ELECTRICAL

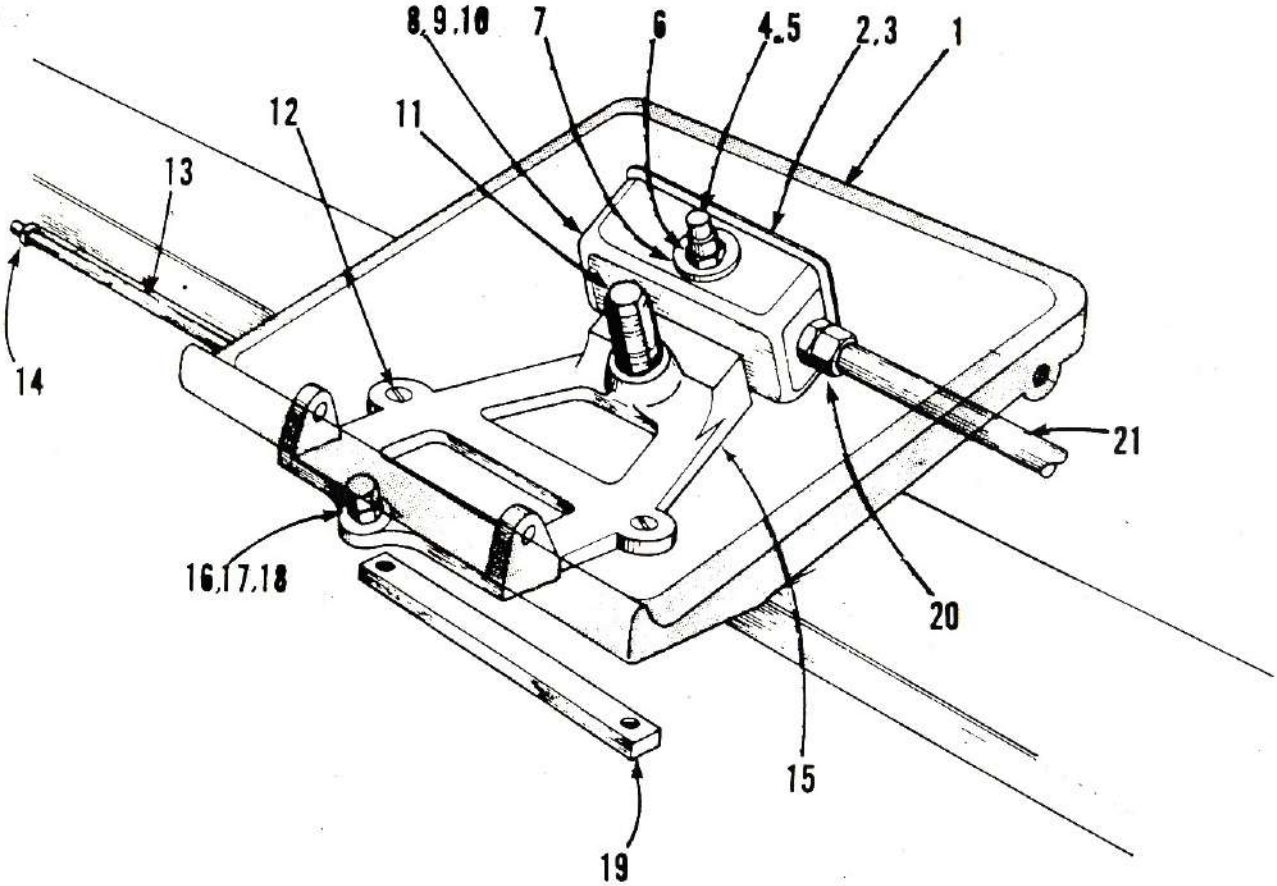

DET.	PART NUMBER	DESCRIPTION
1	04-0180-0-003	Treadle
2	30-0042	Cover
3	01-2715	Screw
4	04-0184	Switch
5	01-4461	Spacer
6	01-3430	Nut
7	04-0123	Washer
8	30-0040	Box
9	01-2368	Screw
10	01-4063	Washer
11	04-0181	Stop
12	01-2444	Screw
13	01-6581	Shaft
14	01-6582	Retaining Ring
15	04-0179-0-001	Base
16	01-2526	Screw
17	01-3066	Nut
18	01-5621	Spring
19	40-0301	Nut Plate
20	04-0087	Connector
21	06-0098-0-001	Cable

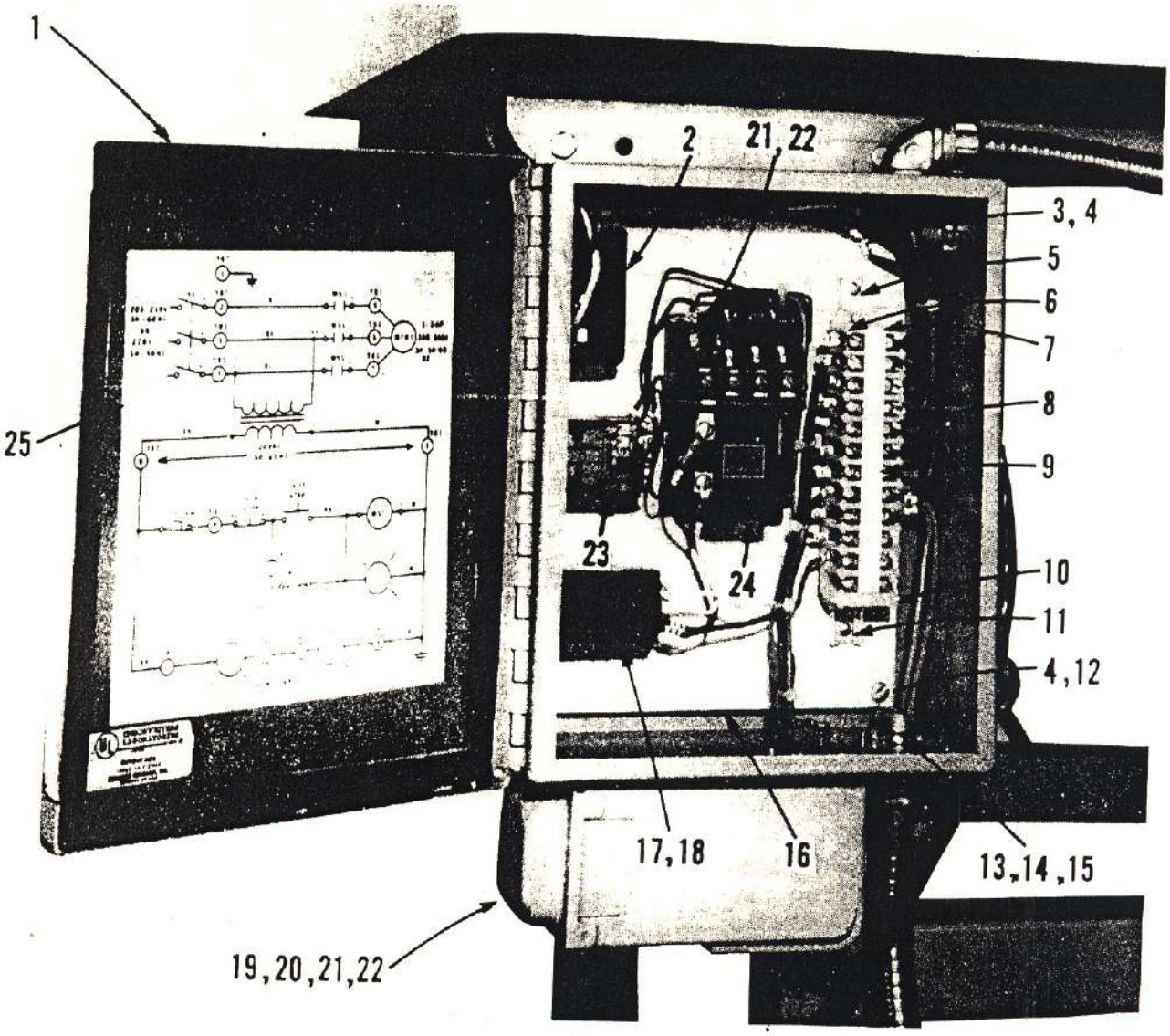

DET.	PART NUMBER	DESCRIPTION
1	13-0109	Cabinet
2	04-1133	Switch
3	01-2766	Screw
4	01-4672	Lockwasher
5	06-0017-0-016	Channel
6	06-0024	Clip
7	06-0094-0-001	Plug
8	06-0030	Terminal Block
9	06-0039-0-102	Strip
10	06-0031	End Barrier
11	01-2481	Screw
12	01-2680	Screw
13	04-0084-0-802	Nut
14	06-0381	Close Nipple
15	06-0140	Bushing
16	13-0110	Control Panel
17	13-0115	Pilot Light
18	06-0518	Lamp
19	06-0545	Transformer
20	05-0369	Wire Nut
21	01-2247	Screw
22	01-4672-0-001	Lockwasher
23	06-0343	Push Button
24	04-1208	Contactor
25	13-0105	Decal

103 BRAKE ASSEMBLY

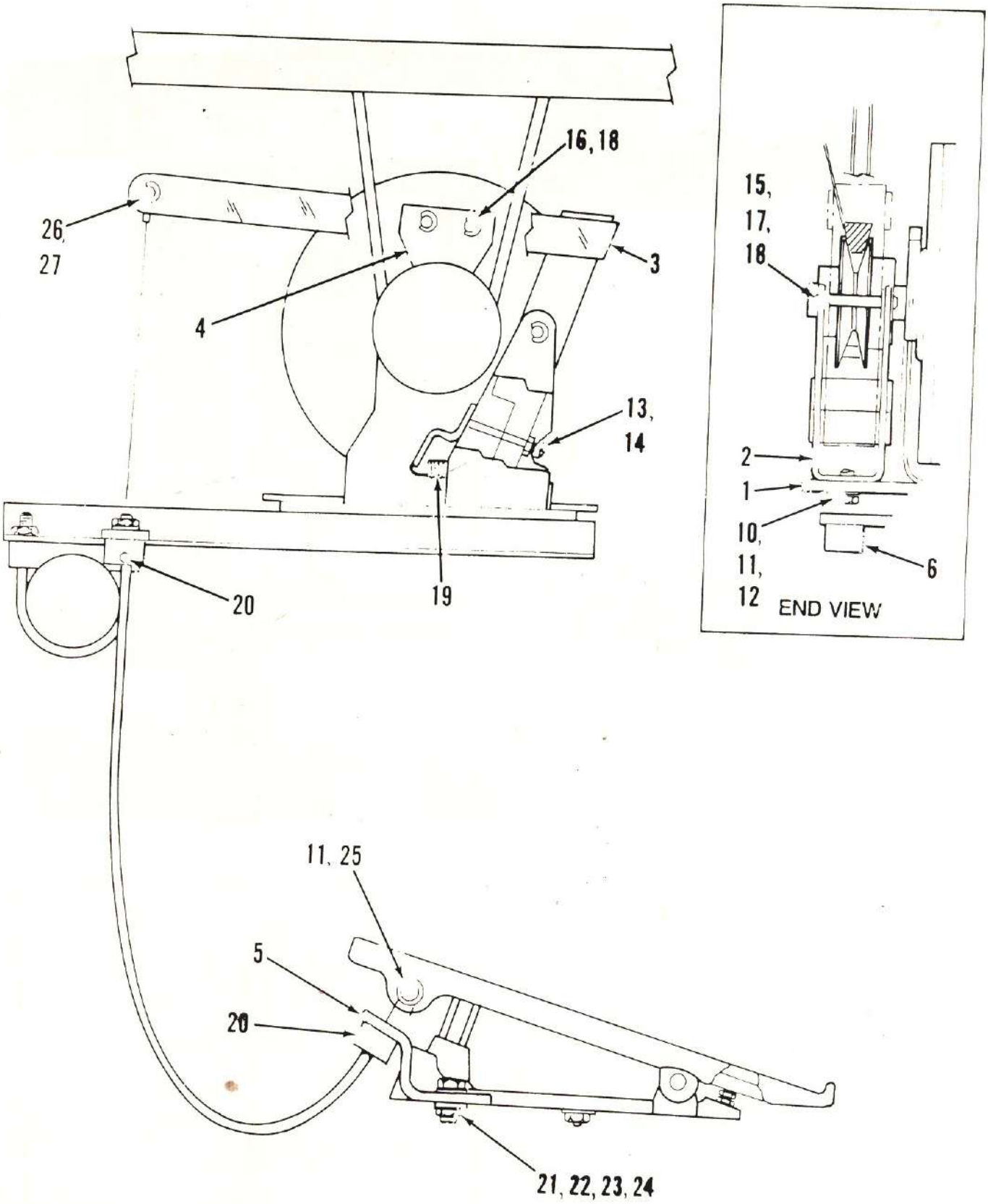

103 BRAKE ASSEMBLY

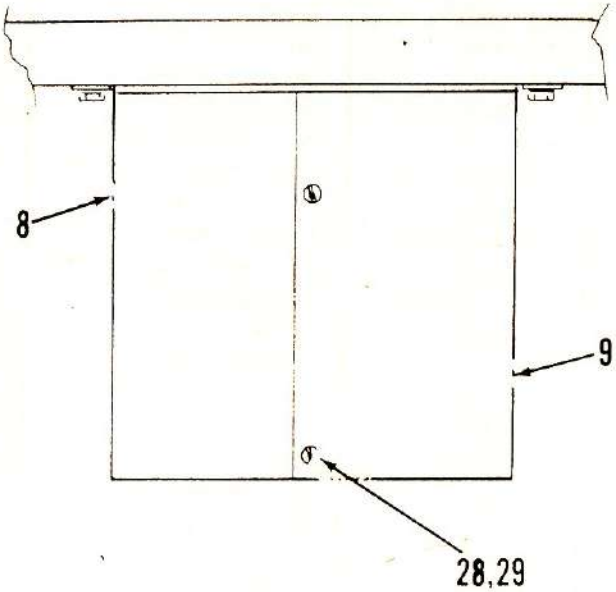

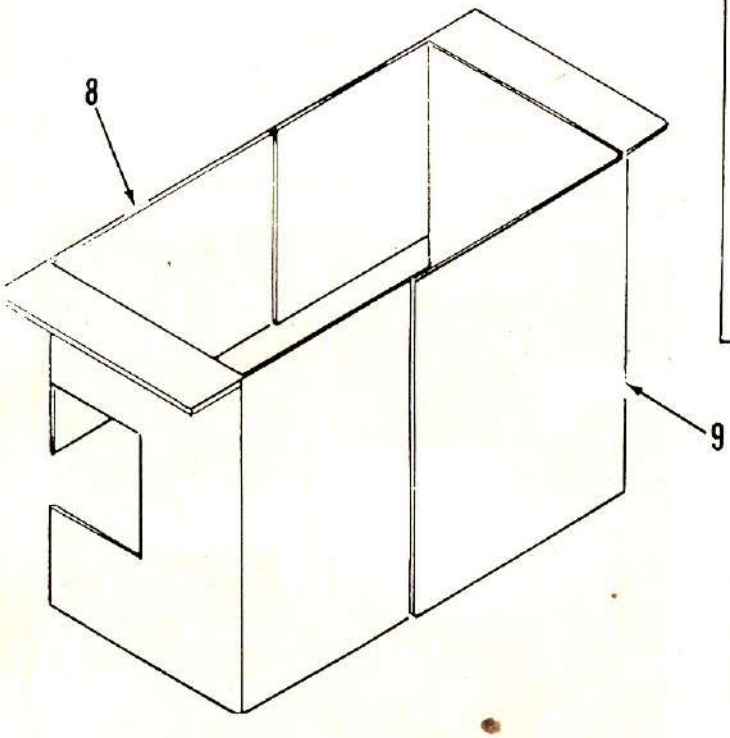

DET.	PART NUMBER	DESCRIPTION
1	04-0803	Mounting Plate
2	04-0802	Pivot Bracket
3	04-0801	Lever
4	04-0804	Block
5	04-0805	Anchor Lower
6	04-0806	Anchor Upper
7	04-0811	Cable
8	04-0808	Guard Rear
9	04-0809	Guard Front
10	01-2830	Screw
11	01-4445	Washer
12	01-4004	Lockwasher
13	01-1694-0-509	Screw
14	01-3061	Nut
15	04-0812-0-002	Pin
16	04-0812-0-001	Pin
17	01-4035	Washer
18	01-6425	Retaining Ring
19	01-5654	Spring
20	01-2442-0-001	Screw
21	01-2877-0-001	Screw
22	01-4579-0-001	Washer
23	01-4581	Lockwasher
24	01-3549	Nut
25	01-2328	Screw
26	01-6488	Pin
27	01-6474	Retaining Ring
28	01-1728-0-002	Screw
29	01-4672-0-001	Lockwasher

BELT DRIVE

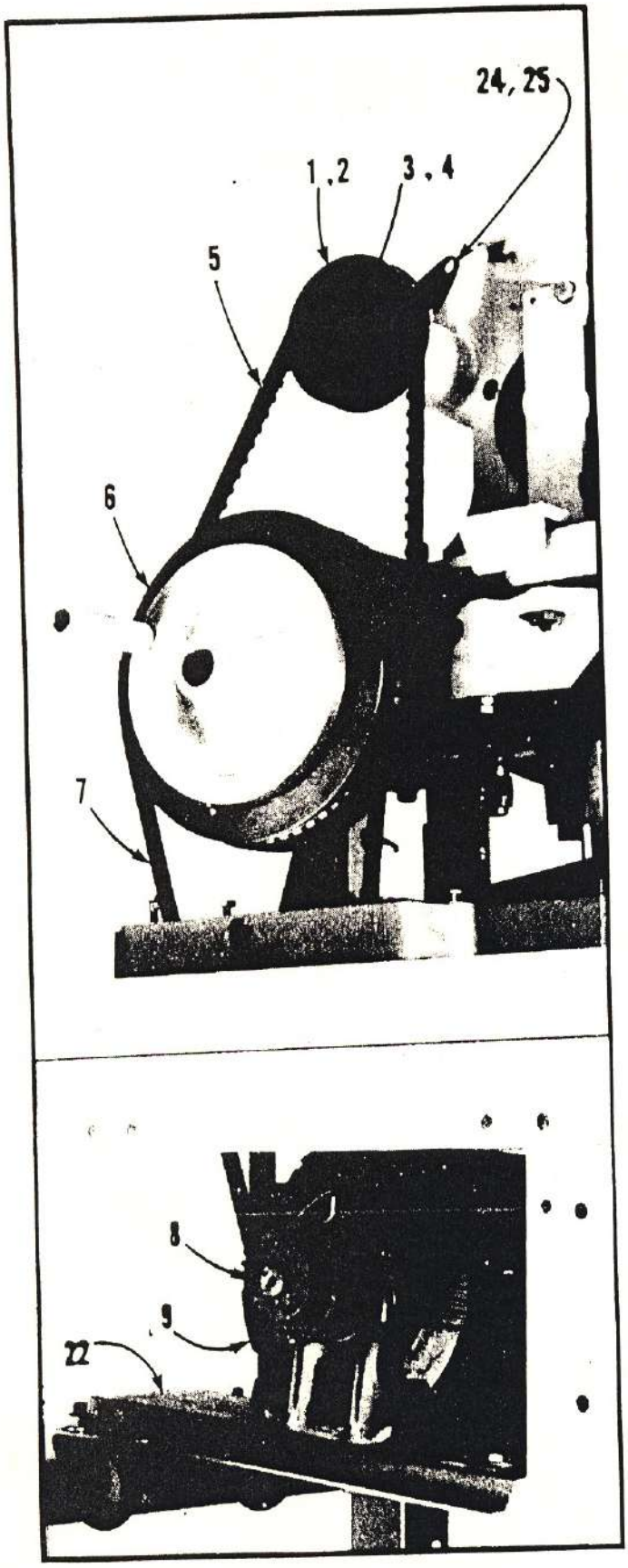

DET.	PART NUMBER	DESCRIPTION
1	13-1239	Pulley
2	01-1685-0-004	Set Screw
3	13-1237	Shaft
4	01-8413	Key
5	05-1103	Belt
6	13-3039-1-050*	Cutting Wheel Asm.
7	05-1102	Belt, Narrow Tables
	05-0087-0-420	Belt, Regular Tables
8	04-1609	Drive Pulley
9	04-0002-0-046	Motor, 3Phase, 50/60HZ.
	04-0002-0-014	Single Phase, 50/60HZ.
	04-0002-0-012	Single Phase, 60HZ.
10	01-2640	Screw
11	04-1553	Support Rod
12	01-2877-0-001	Bolt
13	01-3549	Nut
14	01-4579-0-001	Washer
15	01-4581	Lockwasher
16	04-1552	Clevis
17	01-6475	Tru-Arc Ring
18	01-6904	Pivot Pin
19	01-3462	Nut
20	01-4415	Washer
21	01-2996	Bolt
22	04-1546	Bracket
23	04-1524	U-Clamp
24	13-0528	Cover Bracket
25	01-1739-0-001	Screw

* Assembly refer to Parts Index for Components

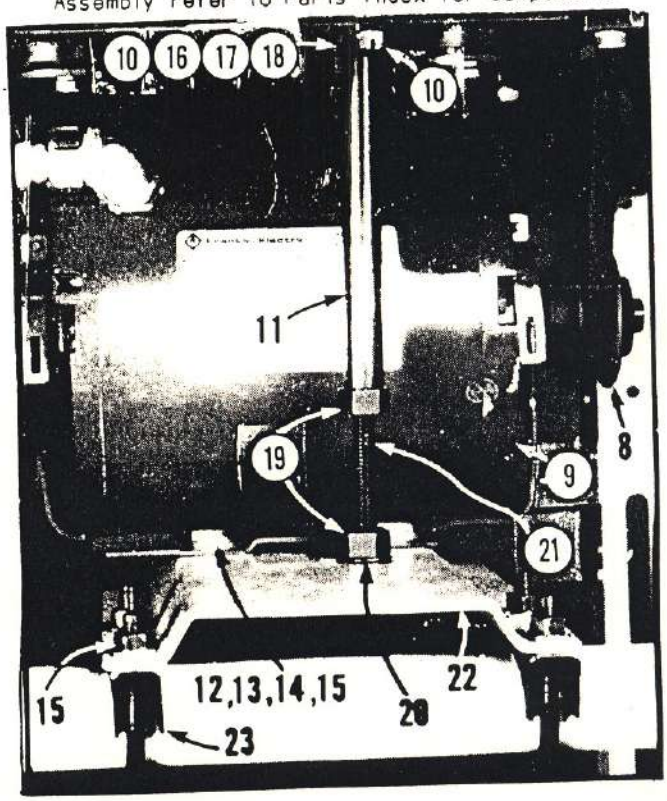

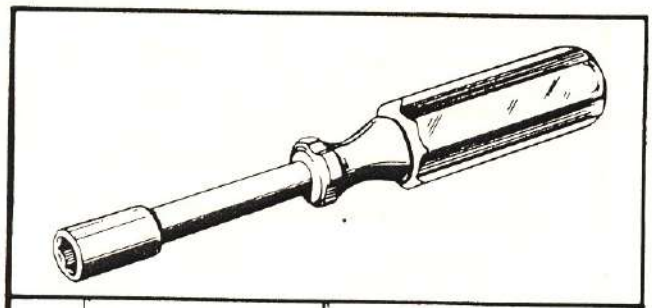

1	03-0007 03-0033	Socket Wrench 1/4" Socket Wrench 5/16"

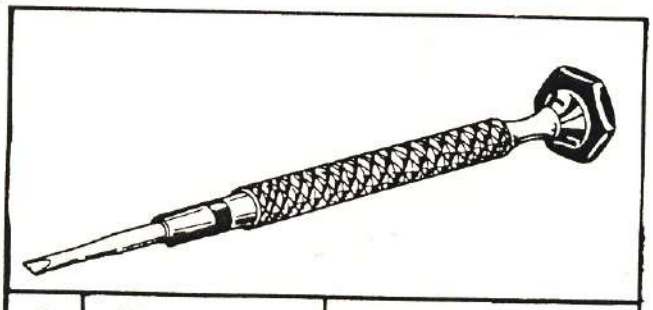

2 3	03-0038 03-0053	Screwdriver Double ended Blade (included with #2 or can be ordered separately.)

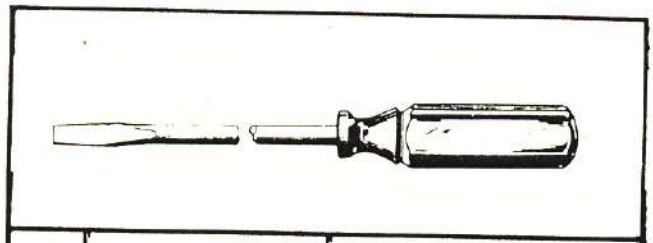

4	03-0188 03-0189 03-0024 03-0278	Screwdriver 3/16"-10" Screwdriver 1/4"-8" Screwdriver 3" Blade Screwdriver 2" Blade

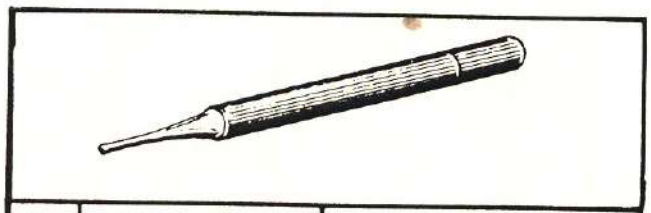

5	03-0045	Pin Wrench

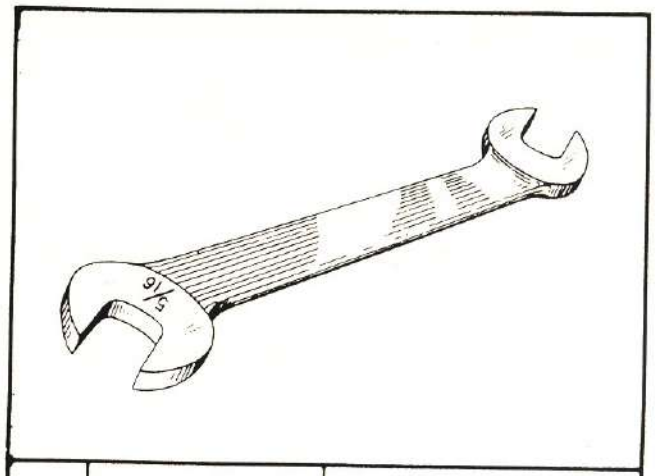

6	03-0018	3/8" - 5/16" Wrench

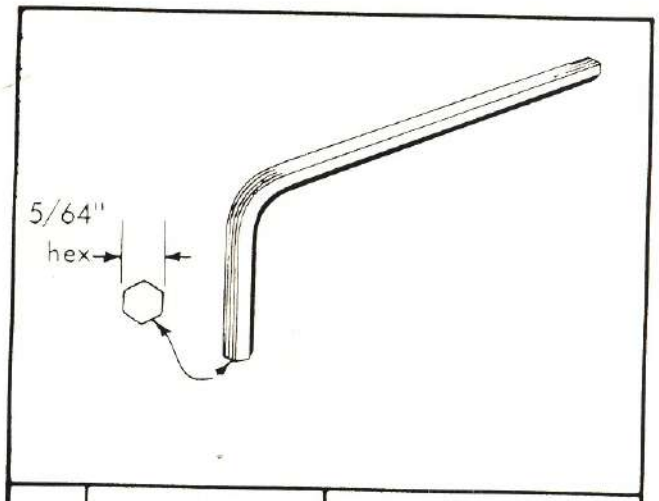

7	03-0162 .	5/64" Wrench

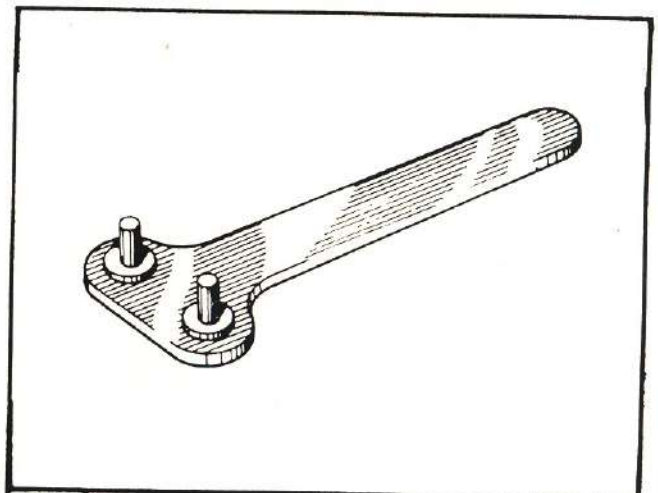

8	03-0011	Spanner Wrench

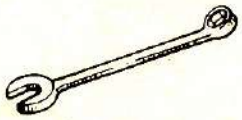

9	03-0019	Wrench 1/4"

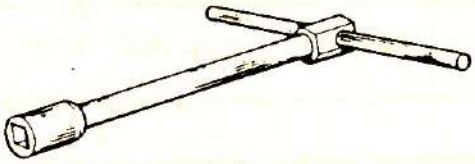

10	03-0010 03-0048-1	Sq.Socket Wrench5/16" Sq.Socket Wrench 7/16"

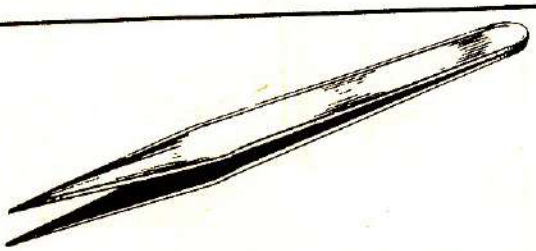

11	03-0013	Tweezers

*Extra Fine (for loopers)

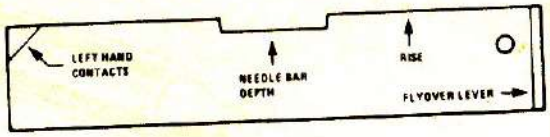

12	03-0279	Gage

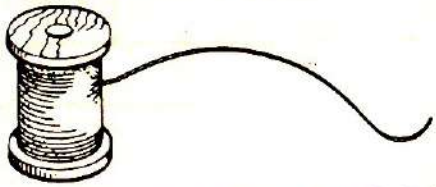

13	03-0032-0-003 03-0032-0-004 03-0032-0-005 03-0032-0-612*	Emery Cord #3 Fine Emery Cord #4 Med. Emery Cord #5 Coarse Emery Cord #612

14	03-0020	Threading Wire

15	03-0022	Oiler
16	05-0090	Lubricating Oil, 8 oz
17	05-0140	Grease, clutch

NEEDLES

Needles for the Reece series 103 machines are packaged and sold in boxes of 100, in the sizes and types listed. They are of superior struck groove construction, chrome plated and are spotted at the eye except in size 00 and finer. When ordering, specify quantity — (100, 200 etc.) and give the Needle E.D.P. Number.

TYPE	APPLICATION	E.D.P. NUMBER	CODE NUMBER	NEEDLE BLADE SIZE
ROUND POINT LONG SHANK	Applicable to the majority of woven fabrics, knits and other materials of similar consistency. The Long Shank needles have added stiffness in the blade which permits the use of one size smaller needle than would be normally required. Long Shank needles can not be used on heavy material that would be penetrated by the tapered portion of the needle shank.	02-0500-1-000 02-0500-1-100 02-0501-1-110	500-LS-000 500-LS-00 501-LS-0	Extra Fine Very Fine Fine
ROUND POINT		02-0501-0-111 02-0501-0-112 02-0501-0-113	501-1 501-2 501-3	Medium Heavy Very Heavy
ROUND POINT BALL EYE	Applicable to closely woven fabrics or where sewing is over heavy seams, particularly in cottons. In sewing, the Ball Eye produces a hole in the fabric slightly in excess of the needle blade diameter, thereby reducing needle heating below that of a needle with uniform blade diameter.	02-0502-0-111 02-0502-0-112 02-0502-0-113	502-1 502-2 502-3	Medium Heavy Very Heavy
ROUND POINT DOUBLE GROOVE	The Double Groove needle should be used only when conditions justify it because it casts a smaller loop than standard needles and may introduce skipping. For this reason looper points should be set close to needle blade. This needle is used on materials having a tendency to trap the thread in its desent into the work which affects the thread takeup, or causes the thread to break at the needle's eye.	02-0503-0-111 02-0503-0-112 02-0503-0-113	503-1-DG 503-2-DG 503-3-DG	Medium Heavy Very Heavy
EXTRA LONG POINT BALL EYE	Applicable to fabrics which offer high resistance to needle penetration. Also recommended in cases where fast timing of the loopers is necessary. This needle differs from the 501 type needle only in length from the eye to the point.	02-0504-0-111 02-0504-0-112 02-0504-0-113	504-1 504-2 504-3	Medium Heavy Very Heavy
BALL POINT LONG SHANK	Applicable to synthetic fabrics, particularly of the tightly woven or tightly knitted types where the fibers of the material are subject to damage by conventional sharp pointed needles. The Long Shank needles of this type have the advantages stated above for Round Point Long Shank needles.	02-0505-1-100 02-0505-1-110	505-LS-00 505-LS-0	Very Fine Fine
BALL POINT		02-0505-0-111	505-1	Medium
ROCKED POINT BALL EYE	Applicable to leather and similar materials where conventional sharp pointed needles tend to leave excessive punctures. The split made by Rocked Point needles in leather will tend to close up after penetration. This needle permits a higher stitch density than is possible in leather with a Round Point needle.	02-0506-0-111 02-0506-0-112 02-0506-0-113 02-0506-0-114	506-1 506-2 506-3 506-4	Medium Heavy Very Heavy Extra Heavy
SPEAR POINT	Applicable to fabrics containing a high percentage of starch or similar substances which tend to cause needle heating or resistance to proper pulling up of the stitches.	02-0508-0-111 02-0508-0-112 02-0508-0-113	508-1 508-2 508-3	Medium Heavy Very Heavy

REECE®

CORD TRIM

BUTTONHOLE MACHINES

series 103

MODELS

CT • CA • 5/8" • RE

CT • CA • 5/8" • LE

CT • CA • 3/4" • RE

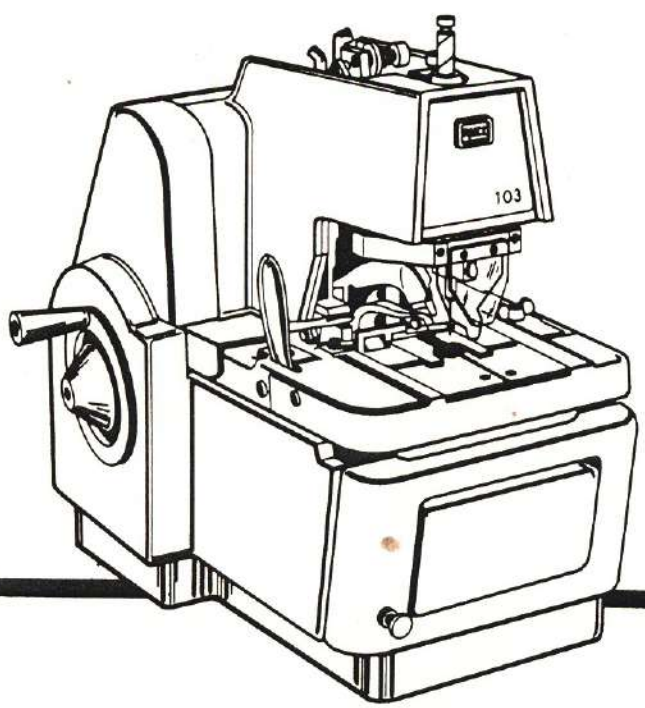

ILLUSTRATED PARTS

This section contains parts special to Cord Trim models. All other parts are standard and should be found in the Adjustable Flybar (basic) Section of this Manual.

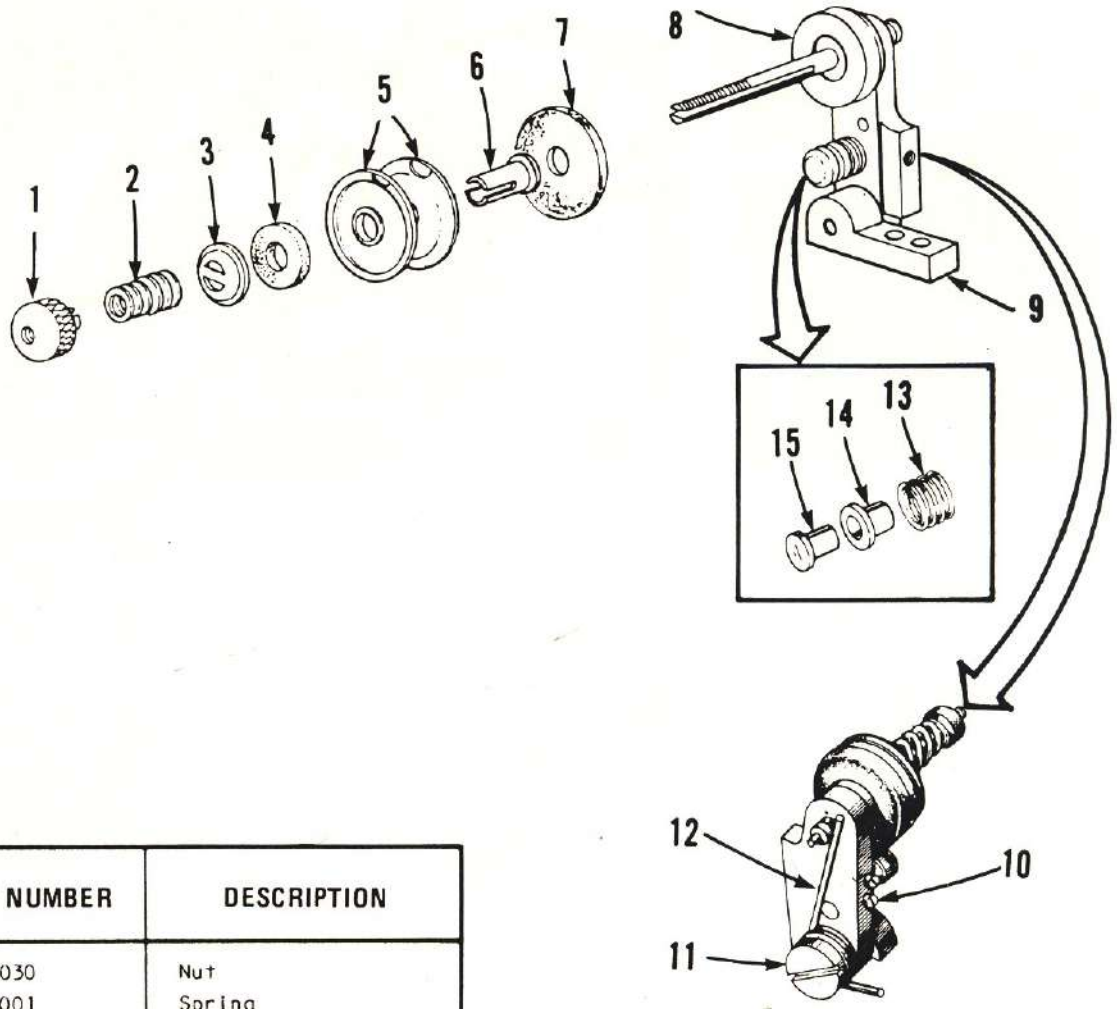

DET.	PART NUMBER	DESCRIPTION
1	10-4030	Nut
2	01-5001	Spring
3	10-1003	Washer
4	10-1004	Felt Washer
5	10-1005	Split Tension
	10-1078-1	Tension Roller (for Solid Roller Tension)
6	10-1007	Bushing
7	10-1077	Felt Washer
8	10-1158-1-050	Tension Arm
9	10-1159	Tension Bracket
10	01-2001	Screw
11	01-1114	Screw
12	01-5163	Torsion Spring
13	01-5002	Spring
14	10-1009	Bushing
15	10-1008	Guide
16	01-2039	Screw
17	10-1160	Cam
18	01-2362	Screw
19	01-4523	Washer
20	01-6334	Rod
21	13-1001-0-051	Head

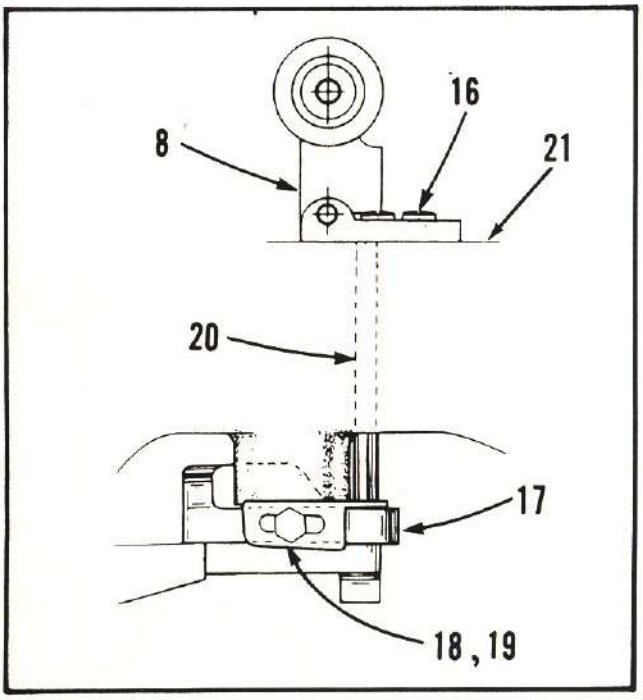

UPPER THREAD TRIMMING

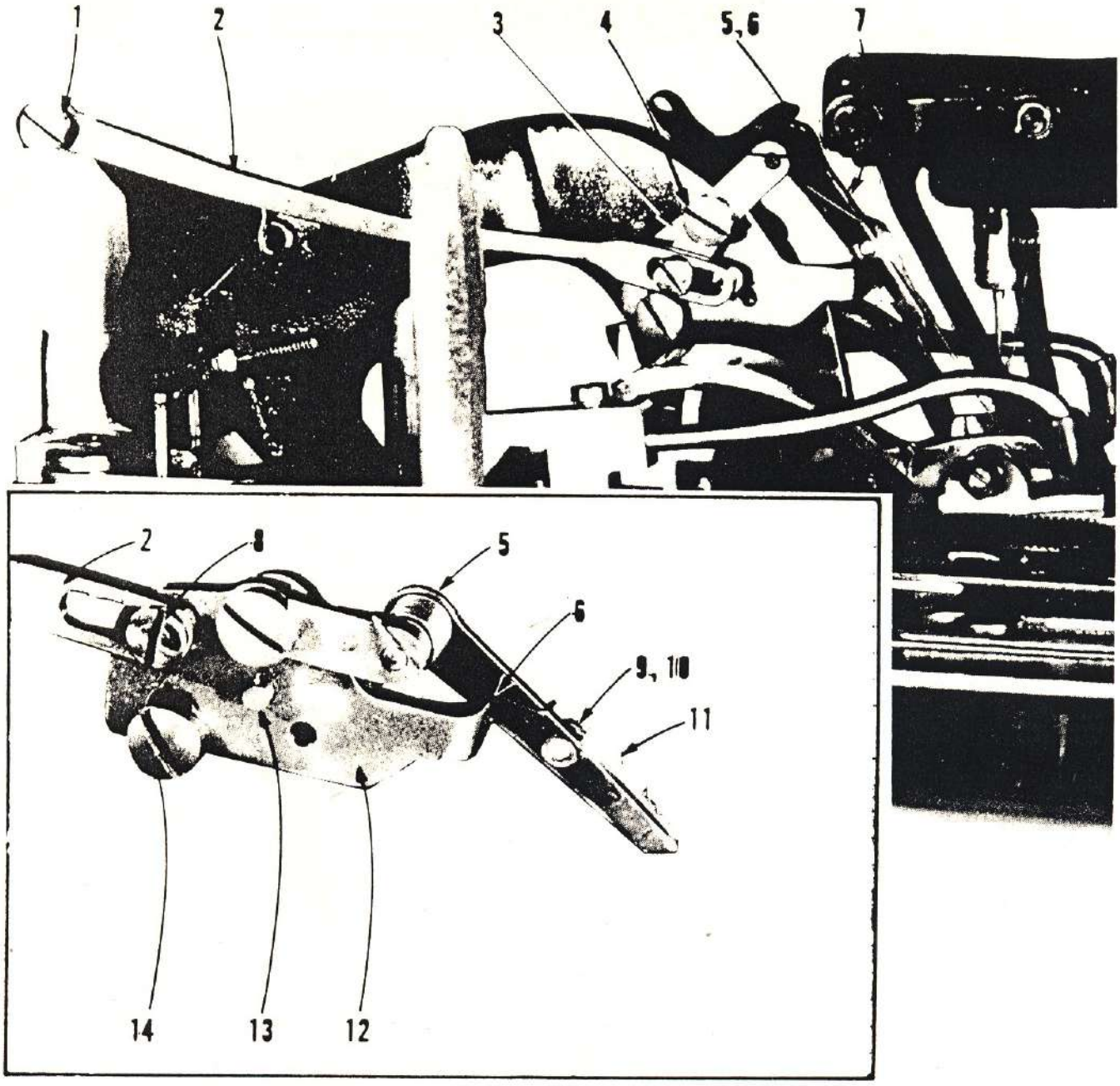

DET.	PART NUMBER	DESCRIPTION
1	10-1214	Screw
2	10-1205-1	Lever
3	10-1206	Link
4	10-1210-1	Pivot Screw
5	10-1208	Screw
6	01-5045	Spring
7	10-1207	Pickup
8	10-1209	Screw
9	01-2053	Screw
10	10-1211	Felt Retainer
11	10-1213	Felt
12	10-1204-2	Adj. Plate
13	01-6009	Pivot Pin
14	01-2006	Adj. Screw

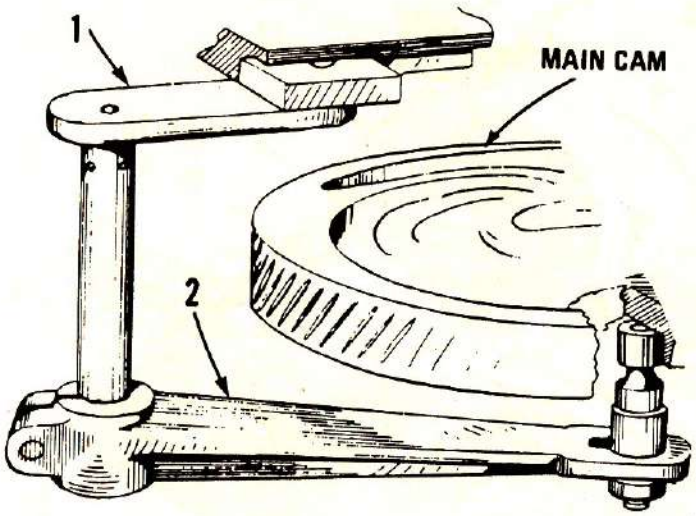

MAIN CAMS		
PROD. NO.	DESCRIPTION	PART NUMBER
13-033	CT-CA-5/8" - RE	10-3064-0-036
13-034	CT-CA-5/8" - LE	10-3064-0-033
13-035	CT-CA-3/4" - RE	10-3064-0-037

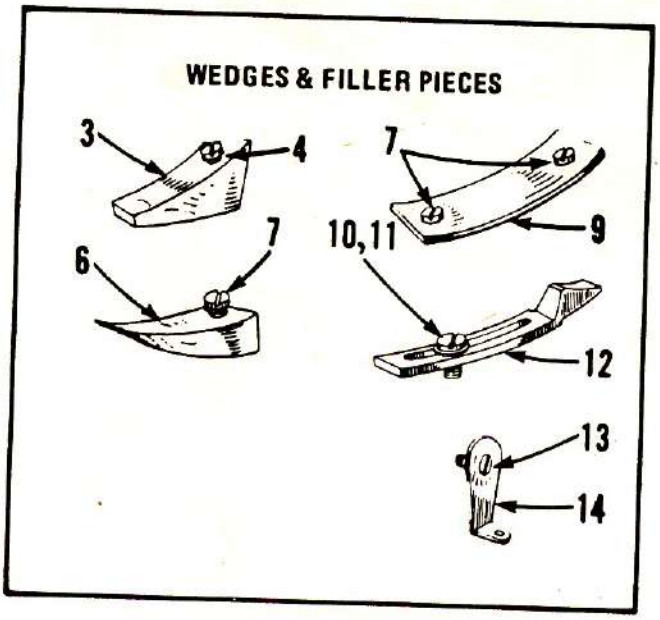

DET.	PART NUMBER	DESCRIPTION
1	10-3034-0-300	Upper Lateral Lever
2	10-3019-0-300	Lower Lateral Lever
3	10-3061-0-300	Clamping Wedge
4	01-2079	Screw
5		
6	10-3200	Unclamping Wedge
7	01-2054	Screw
9	10-3216-0-011	Long Filler Piece
10	01-2347	Screw
11	01-4061	Washer
12	10-3201-0-001	Trimmer Wedge
13	01-2050	Screw
14	10-3217	Cord Guide
15	10-3206	Actuator
16	01-2194	Screw
17	01-7435	Collar
18	01-2077	Screw
19	01-3005	Nut
20	01-5038	Spring
21	10-3090	Clamp
22	01-2024	Screw
23	01-7438	Split Bushing
24	10-3203	Stop
25	10-3202-0-050	Lever Assembly
26	01-3016	Nut
27	10-3084	Shaft
28	10-3205	Clevis

Additional parts special to Cord Trim Models listed in the (basic) Illustrated Parts Section of this manual.

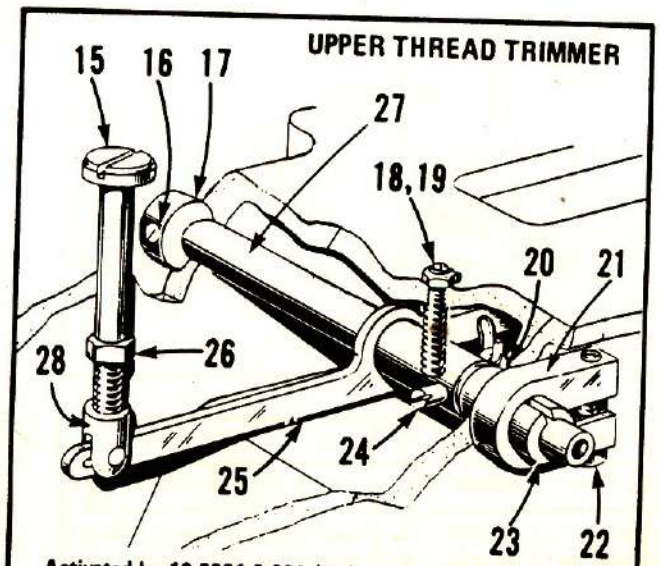

Activated by 10-3201-0-001 (CT), Thread Hook Wedge, located on main cam.

PART NO.	DESCRIPTION	PAGE	DET.
10-1074	Pivot Stud, R.H.	31	18
10-2001-0-001	Cover, R.H.	1	36
10-2012-0-001	Switching Lever	5	6
10-2016-0-984	Switch T/O Wedge	13	33
10-3015-2	Sector Lever	30	12
10-3019-0-300	Lower Lateral	16	3
10-3020-0-006	Stud	16	6
10-3034-0-300	Upper Lateral	16	1

CLAMPING

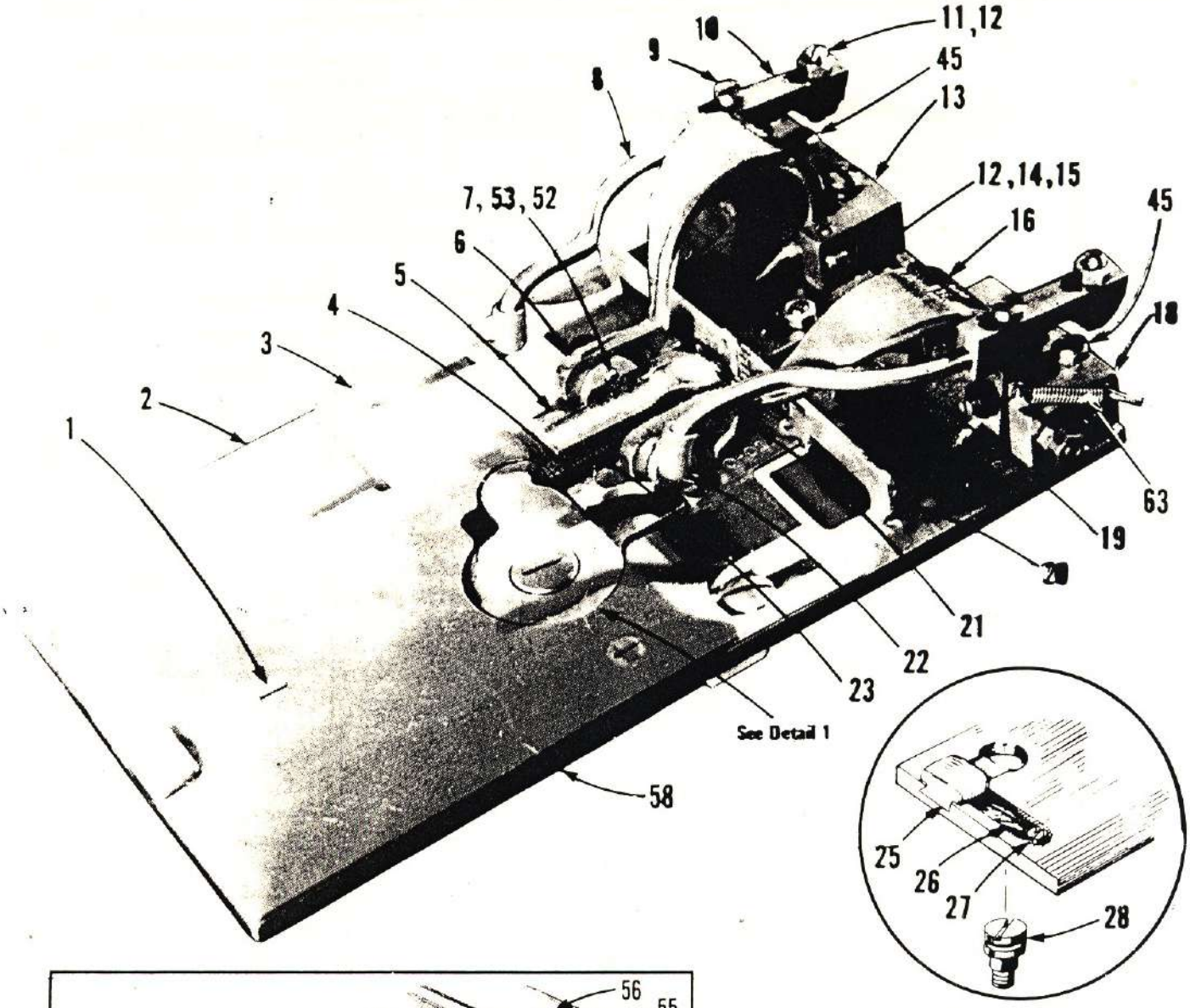

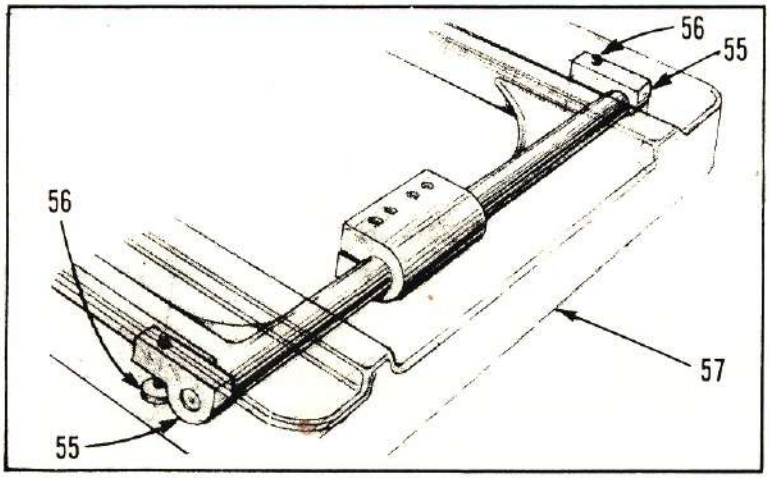

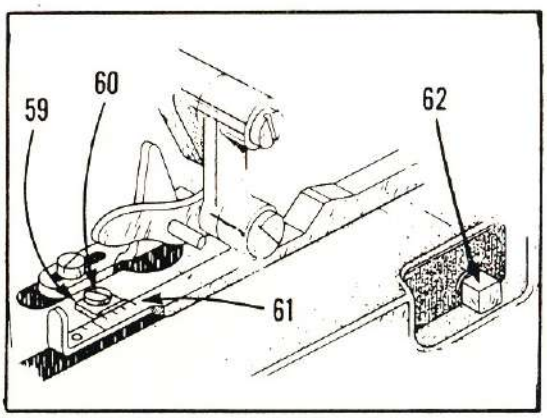

STYLE NO.	DESCRIPTION	CLAMP ARMS		CLAMP FEET		MATS	
		LEFT (6)	RIGHT (16)	LEFT (5)	RIGHT (4)	LEFT (23)	RIGHT (21)
10-033	CT-CA-5/8"-RE	10-2050-2-706	10-2046-2-707	10-2050-1-751	10-2046-1-752	10-2048-0-014	10-2044-0-014
10-034	CT-CA-5/8"-LE	10-2050-2-706	10-2046-2-707	10-2050-1-751	10-2046-1-752	10-2048-0-014	10-2044-0-014
10-035	CT-CA-3/4"-RE	10-2050-2-707	10-2046-2-708	10-2050-1-752	10-2046-1-753	10-2048-0-015	10-2044-0-015

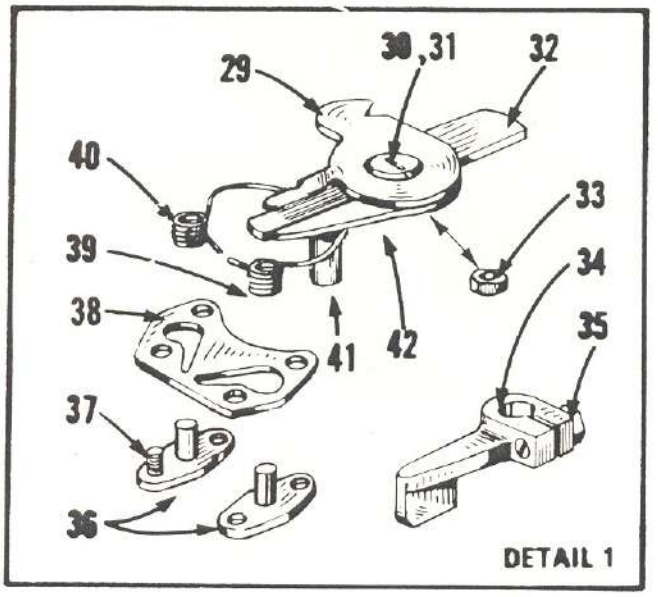

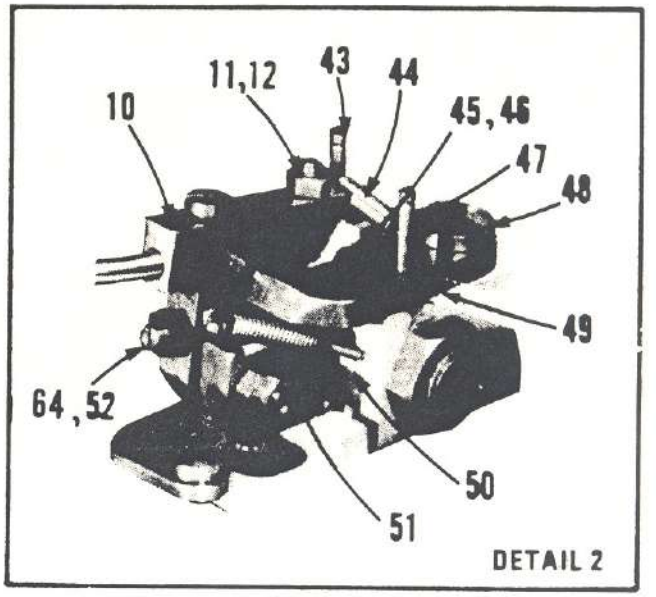

DET.	PART NUMBER	DESCRIPTION
1	01-2075	Screw
2	10-2047-0-300	Clamp Plate, L.H.
3	10-2060	Cloth Gauge, L.H.
4	See Chart	Foot, R.H.
5	See Chart	Foot, L.H.
6	See Chart	Arm, L.H.
7	01-1137	Screw
8	10-2212-1	Hold Down Finger, L.H.
9	01-2054	Screw
10	10-2211-0-001	Finger Holder, L.H.
	10-2211-0-001	Finger Holder, R.H.
11	10-2214	Adj. Screw
12	01-3001	Nut
13	10-2049-0-300	Block, L.H.
14	10-2051-2	Stud
15	10-2052	Roll
16	See Chart	Arm, R.H.
17		
18	10-2045-0-300	Block, R.H.
19	10-2212-0-001	Hold Down Finger, R.H.
20	10-2059-0-300	Cloth Gauge, R.H.
21	See Chart	Mat, R.H.
22	05-0360	Cap
23	See Chart	Mat, L.H.
24	10-2210	Cover Plate
25	10-2202	Latch
26	01-5034	Spring
27	01-2053	Screw
28	10-2035	Clamp Spreading Screw
29	10-2207	Upper Shear
30	10-2208-1	Pivot Screw
31	01-5062	Spring Washer
32	10-2206	Lower Shear
33	01-3021	Nut
34	10-2205	Lower Lever
35	01-2074	Screw
36	10-2218	Spring Mount
37	01-2104	Screw
38	10-2217	Spring Retainer
39	01-5064	Spring, R.H.
40	01-5065	Spring, L.H.
41	10-2204	Actuator
42	10-2203	Bearing (in plate)
43	01-6015	Anchor
44	01-5033	Spring
45	10-2215	Stop
46	10-1203	Stop Screw
47	01-6017	Anchor
48	01-1031	Shoulder Screw
49	10-1201	Wedge, L.H.
	10-1201-0-001	Wedge, R.H.
50	01-6002	Anchor
51	01-5037	Spring
52	01-3016	Nut
53	01-4038	Washer
54	01-2076	Adj. Screw
55	10-2025	Bearing
56	01-2046	Screw
57	13-2001-0-002	Bedplate
58	10-2043-1-301	Clamp Plate, R.H.
59	10-2002	Index
60	01-2050	Screw
61	10-2018-1	Length Gauge
62	01-2068-1	Screw
63	01-5027	Spring

RACE

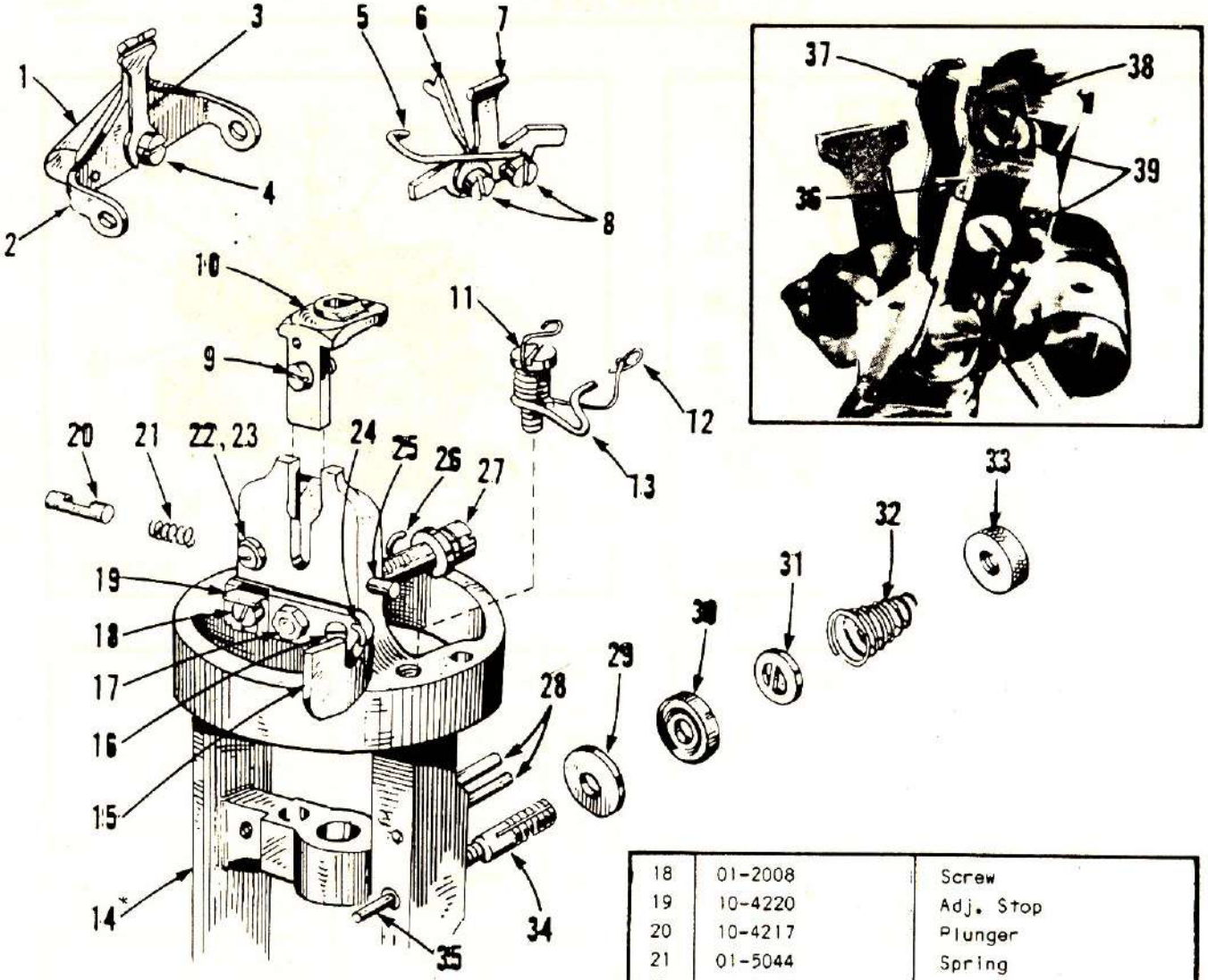

DET.	PART NUMBER	DESCRIPTION
1	10-4210	Cord Weight
2	10-4208	Cord Pull Back
3	10-4209	Flat Spring
4	01-2136	Screw
5	10-4213	Check Wire
6	10-4212	Thread Guide
7	10-4010-2	Needle Guard
8	01-2073	Screw
9	01-2056	Screw
10	10-4012-1-013	Throat Plate, Reg. Bite
	10-4012-1-014	Throat Plate, Wide Bite
	10-4012-1-015	Throat Plate, Narrow "
11	10-4215	Shoulder Screw
12	01-5043	Spring
13	10-4211	Stop Wire
14	13-4001-0-301	Race
15	10-4200	Trimmer Cam
16	01-2075	Screw
17	01-3021	Nut
18	01-2008	Screw
19	10-4220	Adj. Stop
20	10-4217	Plunger
21	01-5044	Spring
22	01-2318	Screw
23	01-4015	Washer
24	01-6001	Anchor
25	01-6010	Pin
26	01-6002	Anchor
27	10-4201	Stud
28	01-6018	Pin
29	10-4032	Disc
30	10-4031	Cup Disc
31	10-4221	Release Washer
32	01-5059	Spring
33	10-4030-0-300	Nut
34	10-4218	Stud
35	10-4219	Release Rod
36	10-1198-1	Knife Holder
37	10-1703-3	Thread Retainer
38	10-1197-1	Knife
39	01-2667	Screw

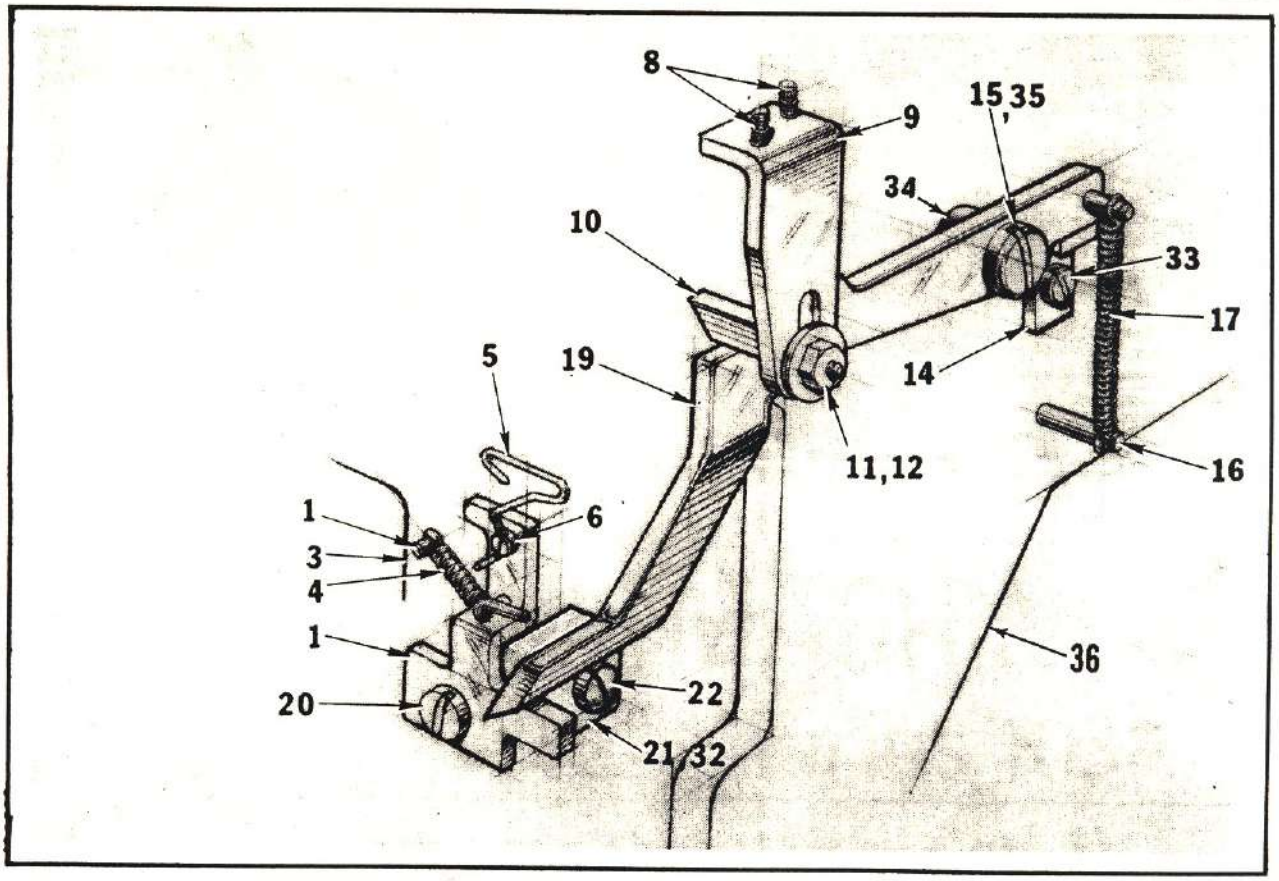

DET.	PART NUMBER	DESCRIPTION
1	13-4205	Draw Off Lever
2	01-6013	Stop Pin
3	See Page 6	Race
4	01-5042	Spring
5	10-4206	Loop Puller
6	01-2081	Screw
7		
8	01-2059	Screw
9	13-2200-1	Bracket
10	10-2201-2	Stud
11	01-3001	Nut
12	01-4011	Washer
13		
14	13-3121	Stop
15	01-2886-0-002	Shoulder Screw
16	01-6011	Anchor
17	01-5039	Spring
19	13-3118-2	Actuator
20	01-1051	Screw
21	13-4207-1	Pivot Block
22	01-2144	Screw
23	01-2038	Screw
24	10-3058-1-300	Knife Holder
25	01-2039	Screw
26	01-2001	Screw
27	10-3218	Stud

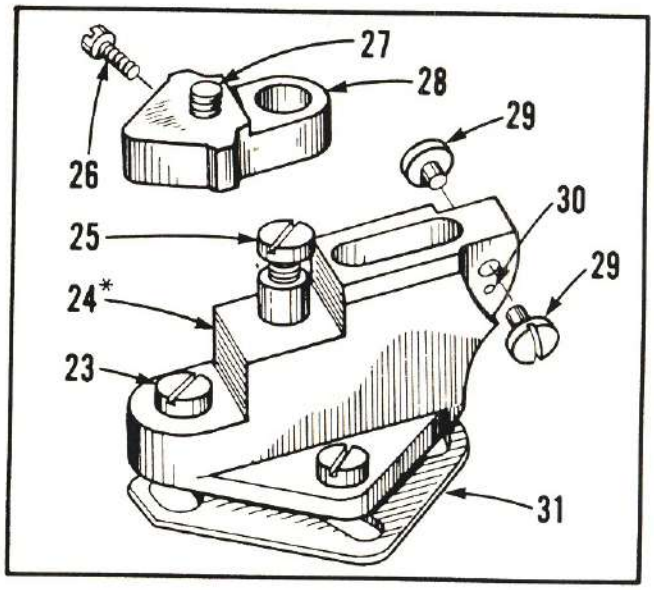

28	10-3067-2-253	Spreading Block
29	01-2102	Screw
30	01-6034	Pin
31	10-3075-1-992	Shim, .016"
	10-3075-1-993	Shim, .005"
32	01-1774	Screw
33	01-2241-0-001	Screw
34	01-7631	Bushing
35	01-7632-1	Bushing
36	03-3111	Cam Case

REECE®

ADJUSTABLE
CUT BEFORE/CUT AFTER

BUTTONHOLE MACHINES

series 103

MODEL
AF • CB/CA • R • RE

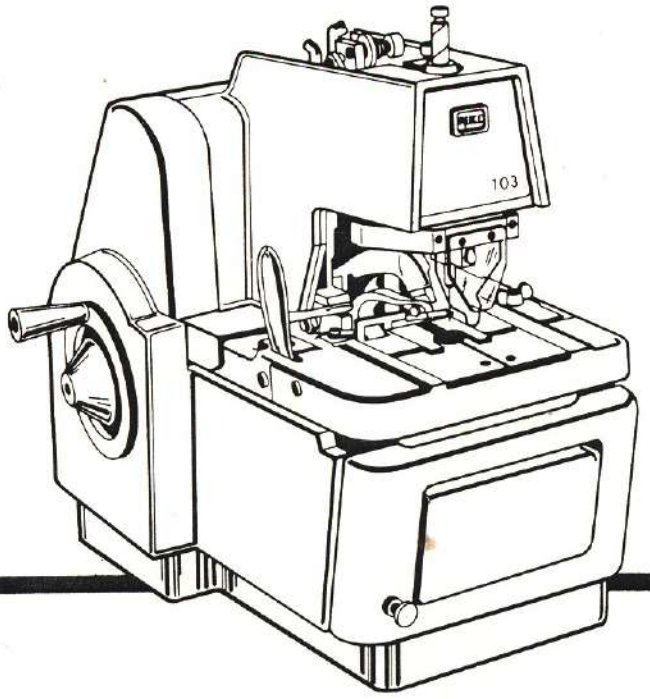

ILLUSTRATED PARTS

This section contains parts special to Adjustable Cut Before/Cut After models. All other parts are standard and should be found in the Adjustable Flybar (basic) Section of this manual.

CLAMP YOKE

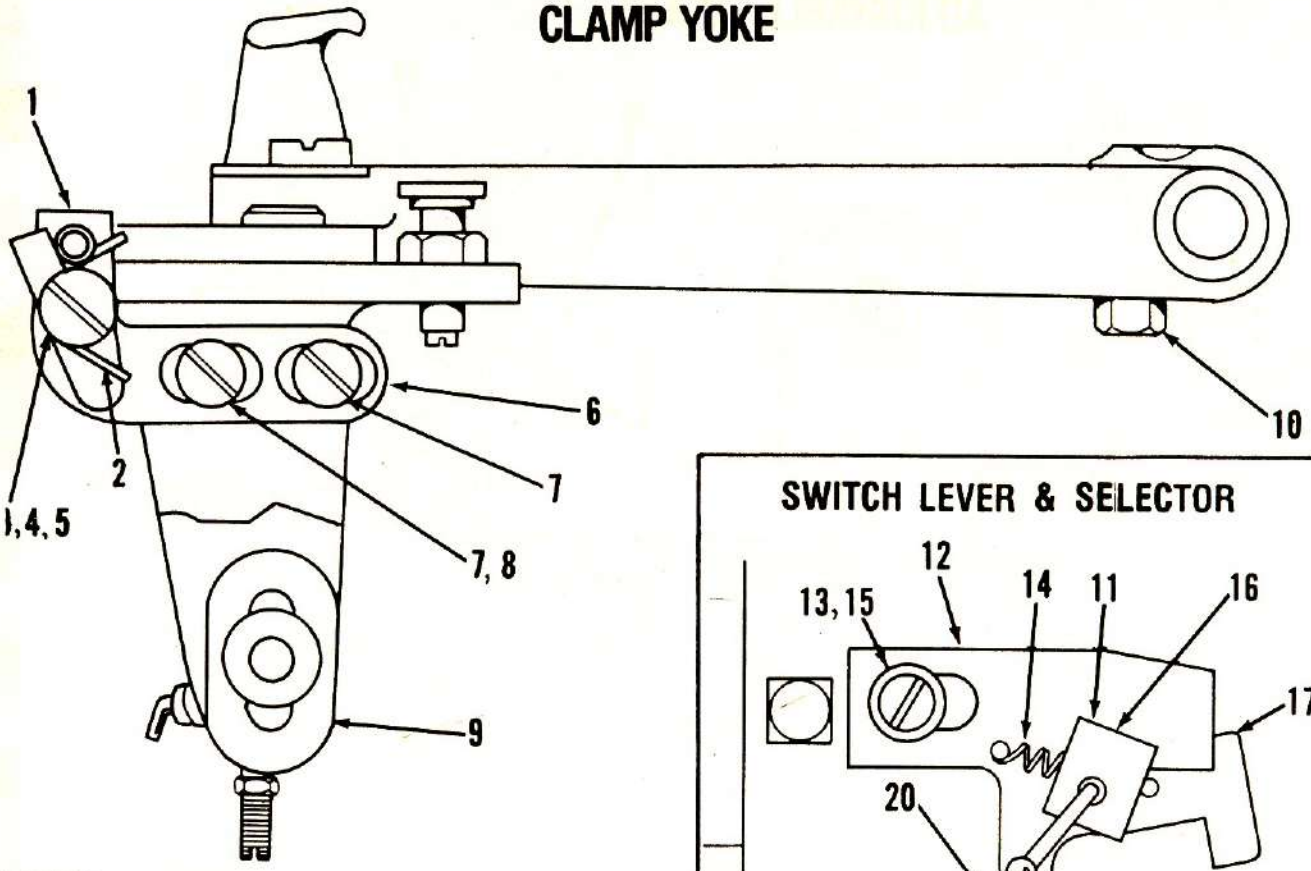

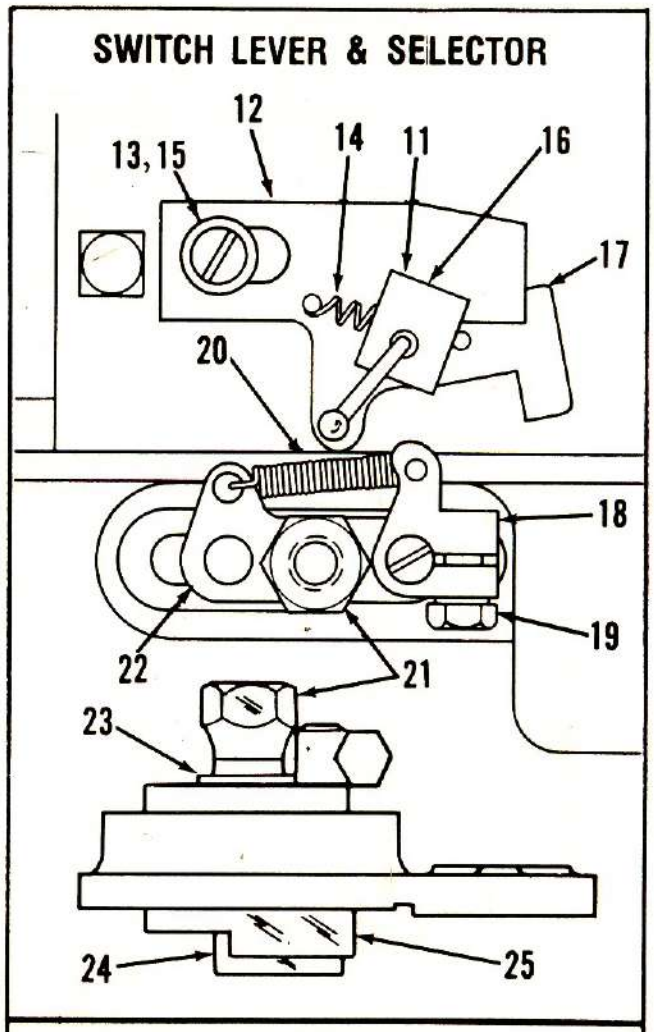

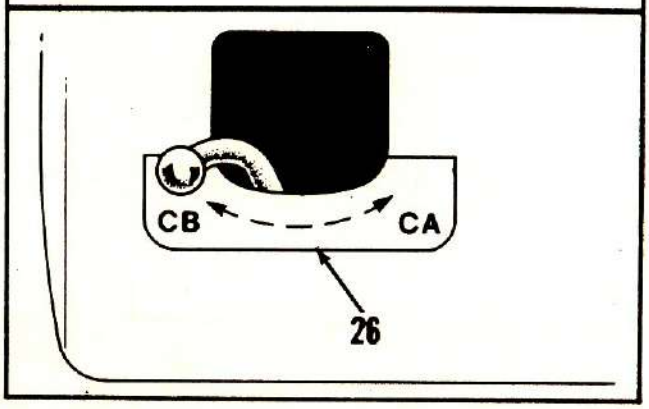

DET.	PART NUMBER	DESCRIPTION
1	10-2075	Latch
2	01-5475	Spring
3	01-1457	Screw
4	01-4065	Washer
5	01-3005	Nut
6	10-2074	Bracket
7	01-2344	Screw
8	13-2088	Eccentric Nut
9	13-2023-1	Toggle Bracket
10	01-1686-0-401	Screw
11	13-1246-1	Yoke
12	13-1180	Block
13	01-2025	Screw
14	01-5604	Spring
15	01-4522	Washer
16	01-2441-0-001	Set Screw
17	13-1181	Latch
18	10-2073	Latch
19	01-2386	Screw
20	01-5473	Spring
21	10-2008	Nut
22	10-2072	Plate
23	01-4063	Washer
24	10-2071	Lever
25	10-2070-1	Block

ADJUSTABLE TOGGLE

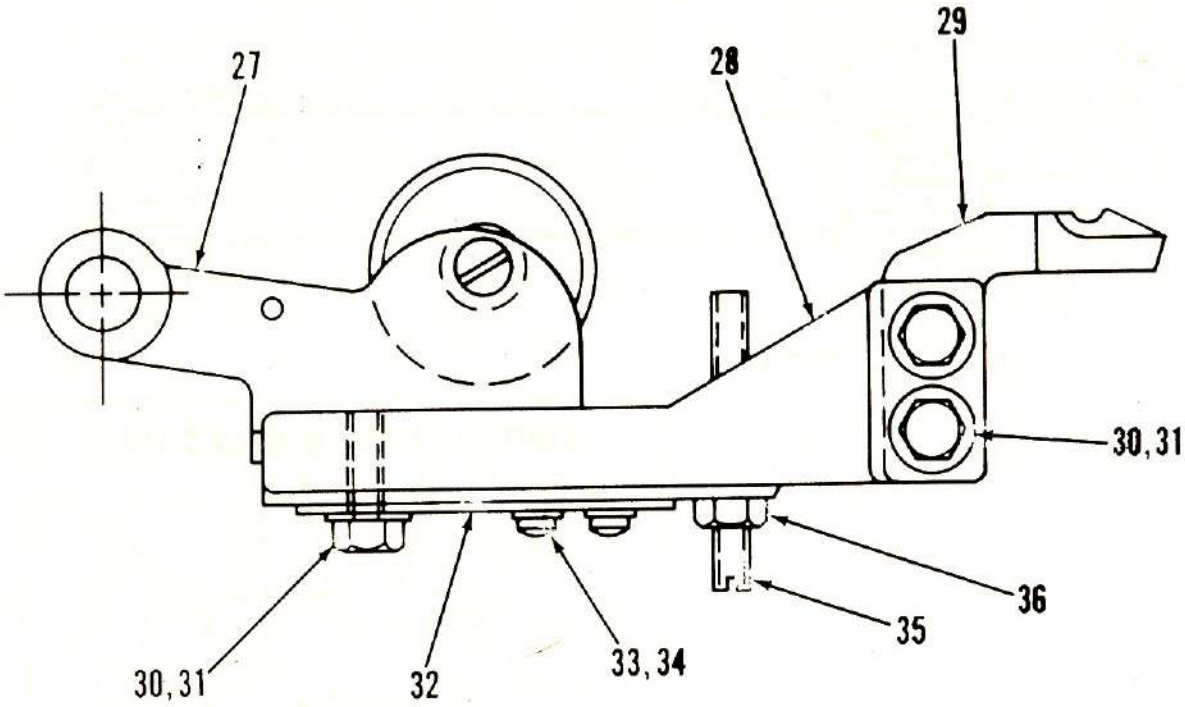

DET.	PART NUMBER	DESCRIPTION
26	13-0518	Decal, CB/CA
27	13-3023	Clamping Lever
28	13-3022-1-023	Extension
29	13-3131	Tip
30	01-1601-0-001	Screw
31	01-4445	Washer
32	13-3094-2	Slide
33	01-2004-0-001	Screw
34	01-4029	Washer
35	13-2014-0-001	Pivot Screw
36	01-3415	Nut
37	01-1601-0-007	Screw

Additional parts special to CB/CA Models listed in the basic Illustrated Parts Section of this manual.

PART NUMBER	DESCRIPTION
10-1071-0-023	Cutting Cam Follower See Page 2, Det.20
10-2044-0-002	Clamp Matt, R.H. See Page 1, Det. 13
10-2048-0-002	Clamp Matt, L.H. See Page 1, Det. 19
10-4011-0-200	Spreader Wedge See Page 27, Det. 2
10-4012-0-004	Throat Plate See Page 27, Det. 1
13-2021-0-023	Clamping WedgeSee Page 2, Det. 24
13-3061-0-300	Clamping Wedge See Page 3, Det. 35

REECE®

BUTTONHOLE MACHINES

series 103

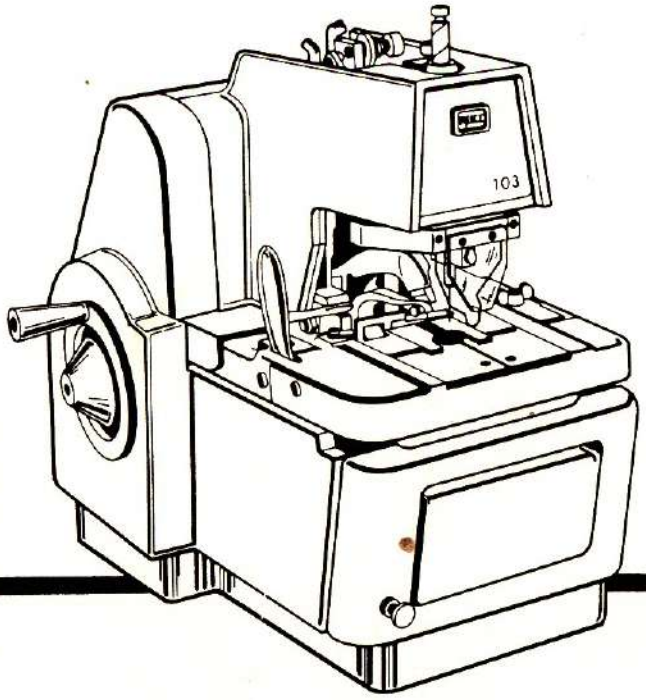

Section 4

PARTS INDEX

PARTS INDEX

PARTS INDEX

PARTS INDEX

PARTS INDEX