# MITSUBISHI SEWING MACHINE PARTS CATALOG

Model·····DY-253

## INDEX


1.本 体 部 分·····Arm bed ·····G23- 1
2.針棒、天びん部分·····Needle bar & thread take up lever mechanism ·····G23- 5
3.上 軸 部 分·····Upper shaft mechanism ·····G23- 7
4.竪 軸 部 分·····Vertical shaft mechanism ·····G23- 9
5.カマ、送り機構·····Rotating hook & feed mechanism ·····G23-11
6.下 軸 部 分·····Lower shaft mechanism·····G23-13
7.上部送り機構·····Upper feed mechanism·····G23-15
8.返し縫い機構·····Reverse lever mechaism ·····G23-17
9.押エ上げ機構·····Presser foot mechanism ·····G23-21
10.給 油 機 構·····Oil lubrication mechanism ·····G23-23
11.付 属 品·····Accessories·····G23-25



MITSUBISHI ELECTRIC CORPORATION

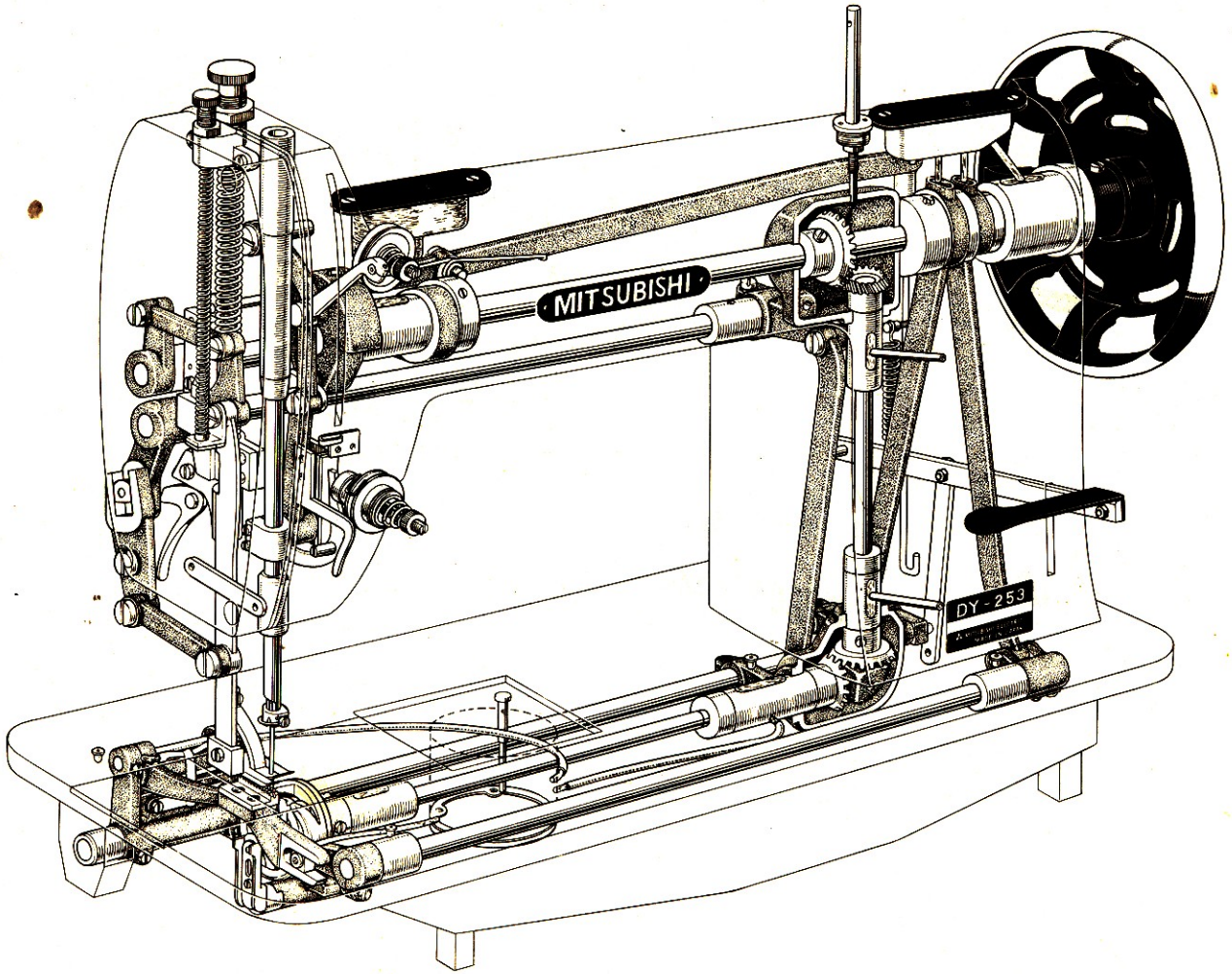
MITSUBISHI
DY-253

# DY-253形　本体部分　ARM BED

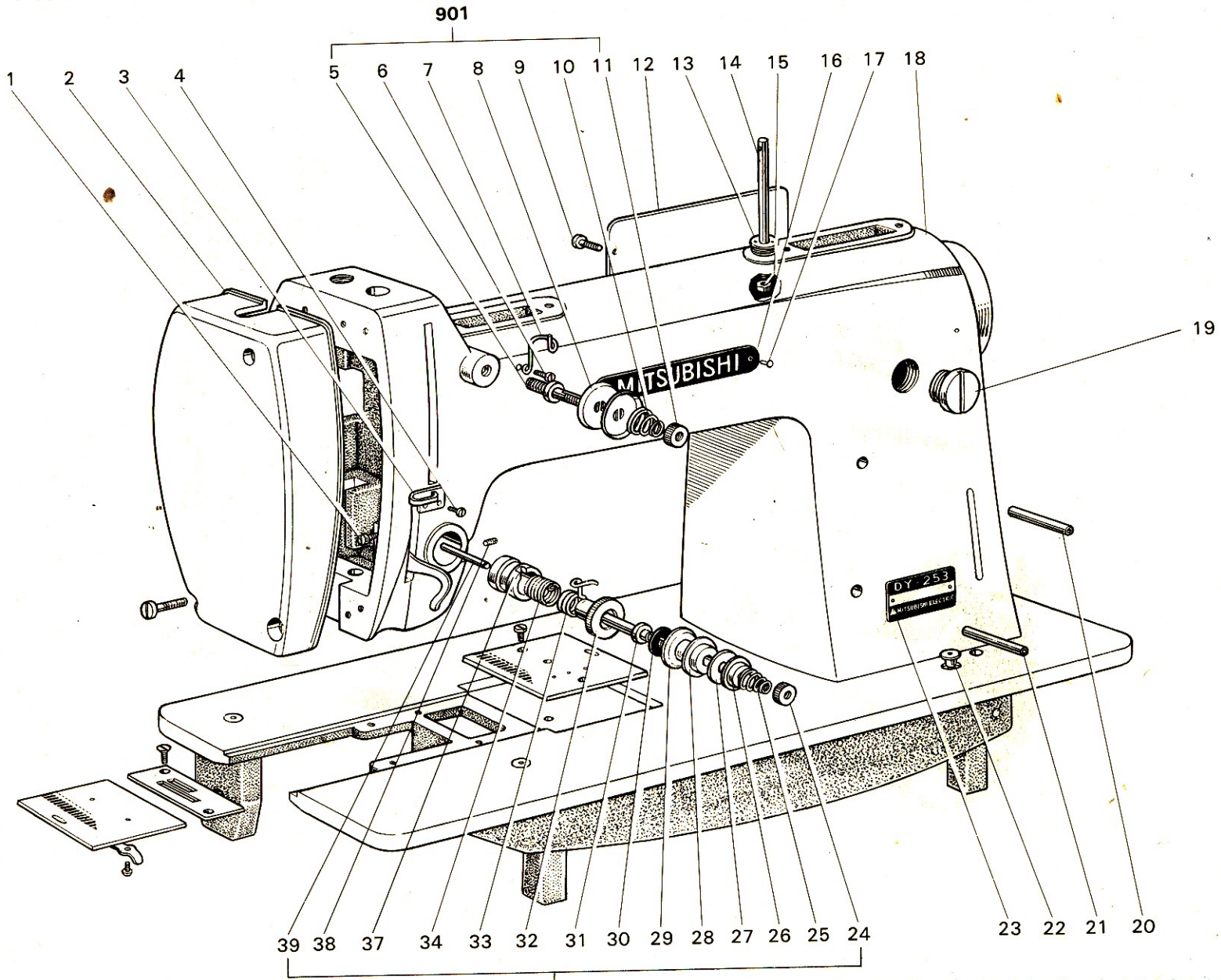

| Fig. No. | サービス部品コード Part No. | 資材コード Code No. | 部品名 | Name of Part | 備考 Remarks |
|---|---|---|---|---|---|
| 1 | M9 1110 002 | W500294 | 平ネジ 11/64(40)×8 | Screw | |
| 2 | MG 23C0 830 | W220613-01 | 面板 | Face plate | |
| 3 | MG 23C0 181 | W461009-01 | 糸カケ(アーム中) | Arm thread guide(middle) | |
| 4 | M9 1103 011 | W502941 | 丸皿ネジ 11/64(40)×7 | Screw for Fig.3 | |
| **901** | **MG 23C1 210** | **W456596** | **副上糸調節器(組)** | **Sub upper thread tension regulator assembly** | |
| 5 | MG 23C0 553 | W502017 | 糸調子棒(後) | Tension stud | Fig.No.901ニ含ム |
| 6 | M9 1109 002 | W500511 | 平ネジ 11/64(40)×7 | Screw for Fig.7 | |
| 7 | MG 23C1 181 | W461022 | 糸カケ(アーム上) | Arm thread guide(upper) | |
| 8 | MG 23C0 555 | W502732 | 調子皿 | Tension disc | Fig.No.901ニ含ム |
| 9 | M9 1110 002 | W500294 | 平ネジ 11/64(40)×8 | Screw for Fig.12 | |
| 10 | MG 23C0 245 | W502733 | 糸調子バネ | Tension spring | Fig.No.901ニ含ム |
| 11 | M9 1604 046 | W501027-02 | 糸調子ナット 1/4(40) | Tension regulating thumb screw | 〃 |
| 12 | MG 23C0 880 | W459356-01 | 横ブタ | Arm side cover | |
| 13 | MG 23C0 188 | W502793 | 糸立台 | Thread spool stand | |
| 14 | MG 23C0 186 | W459374-01 | 糸立棒 | Thread spool pin | |
| 15 | M9 1105 045 | B 503845 | ナット 11/64(40)×5 | Nut | |
| 16 | | W450620 | 社名板 | Name plate | |
| 17 | M9 5001 062 | W461746 | ネジビョウ | Screw for Fig.16 | |
| 18 | | | アームベッド(組) | Arm bed assemby | |
| 19 | M9 5401 002 | W460506 | 平ネジ M22×18 | Screw | |
| 20 | MG 23C0 143 | W502925-01 | 油管(上) | Oil pipe(upper) | |
| 21 | MG 23C0 144 | W502925-02 | 油管(下) | Oil pipe(lower) | |
| 22 | MF 60A0 251 | W469101 | オイルカップ | Oil cap | |
| 23 | | W451064-47 | 形名板 | Model plate | |
| **902** | **MG 23C0 210** | **W456591** | **上糸調節器(組)** | **Upper thread tension regulator assembly** | |
| 24 | | W501027-02 | 糸調子ナット | Tension regulating thumb nut | Fig.No.902ニ含ム |
| 25 | MG 23C1 557 | W461079-1 | 糸調子バネ | Tension releasing lever spring | 〃 |
| 26 | MG 23C0 556 | W461065 | 皿押エ | Tension releasing disc | 〃 |
| 27 | | W502707 | 座 | Tension washer | 〃 |
| 28 | MG 23C1 555 | W502709 | 調子皿 | Tension disc(2) | 〃 |
| 29 | MG 23C2 555 | W502708 | 調子皿 | Tension disc(1) | 〃 |
| 30 | | W502716 | フェルト | Washer(felt) | 〃 |
| 31 | MG 23C1 553 | W456592-01 | 調子棒 | Tension screw stud | 〃 |
| 32 | | W502710 | 調節ブッシュ | Tension regulating bushing | 〃 |
| 33 | MG 23C0 187 | W456593-01 | 糸取りバネ | Tension spring | 〃 |
| 34 | MG 23C0 557 | W456597-01 | ネジリコイルバネ | Spring | 〃 |
| 37 | | W456594-01 | ブッシュ | Tension regulating bushing | 〃 |
| 38 | M9 1508 001 | B 509088 | 頭ナシ止メネジ 15/64(28)×8 | Screw | |
| 39 | | W502388-03 | 糸ユルメピン | Tension releasing pin | Fig.No.902ニ含ム |

# DY-253形　本体部分　ARM BED

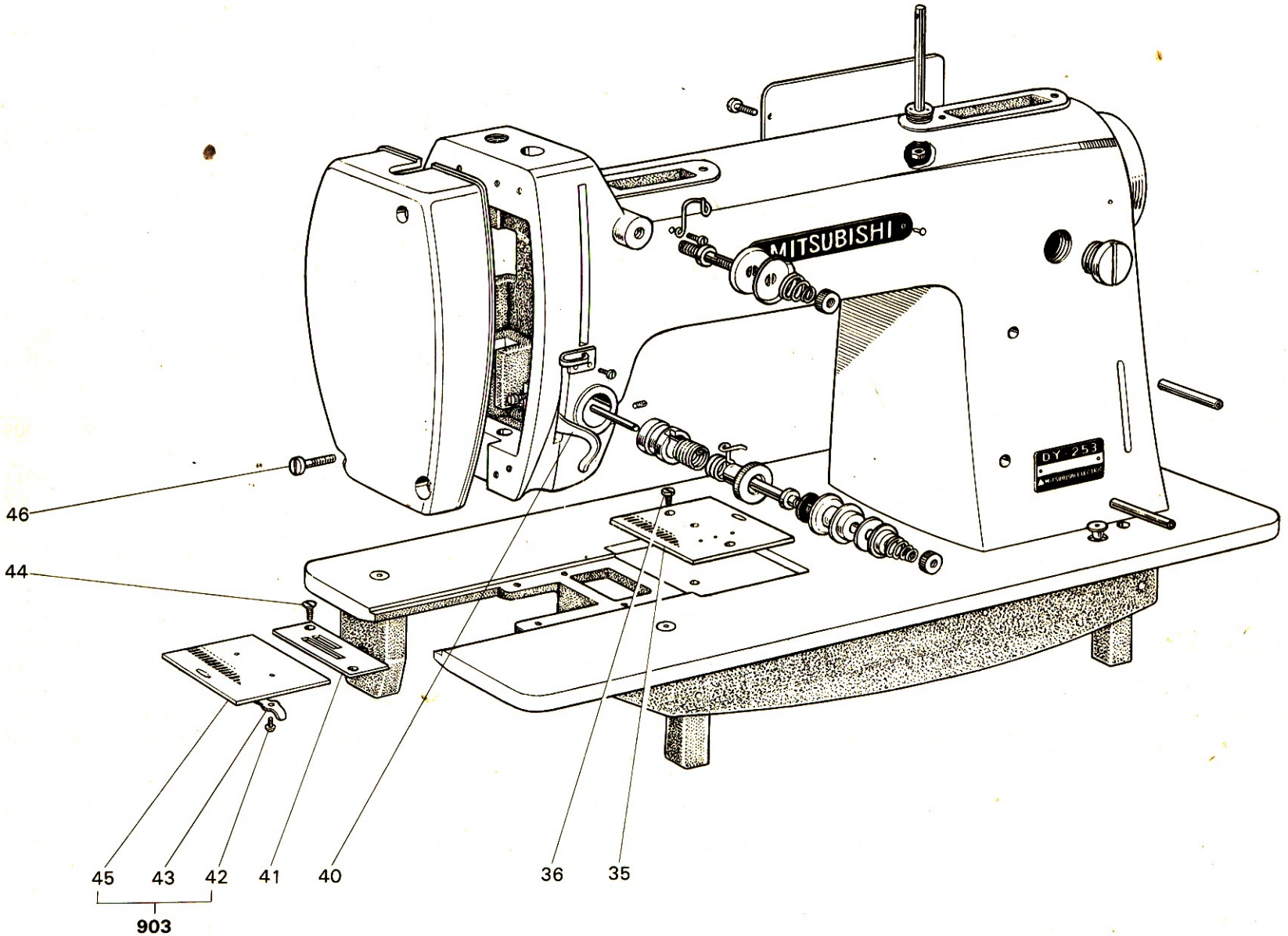

| Fig. No. | サービス部品コード Part No. | 資材コード Code No. | 部品名 | Name of Part | 備考 Remarks |
|---|---|---|---|---|---|
| 35 | MG 23C0 474 | W457517-01 | スベリ板(右) | Slide plate(right) | |
| 36 | M9 1207 002 | W461723 | 平ネジ 3/16(28)×8 | Set screw | |
| 40 | MG 23C0 216 | W457530-01 | 上糸案内 | Upper thread guide | |
| 41 | MG 23C0 101 | W457515-01 | 針板 | Throat plate | |
| **903** | **MG 23E0 470** | **W474365-G01** | **スベリ板(組)** | Slide plate(left)complete | |
| 42 | M9 0602 002 | W501567 | 平ネジ 3/32(56)×3 | Screw | Fig.No.903ニ含ム |
| 43 | MG 23C0 471 | W502711 | スベリ板バネ | Spring for slide plate | 〃 |
| 44 | M9 1207 002 | W461723 | 平ネジ 3/16(28)×8 | Screw | |
| 45 | MG 23C0 473 | W457516-01 | スベリ板(左) | Slide plate(left) | Fig.No.903ニ含ム |
| 46 | M9 1113 002 | W500182 | 平ネジ 11/64(40)×15 | Screw for Fig.2 | |

# DY-253形　針棒、天びん部分　NEEDLE BAR & THREAD TAKE UP LEVER MECHANISM

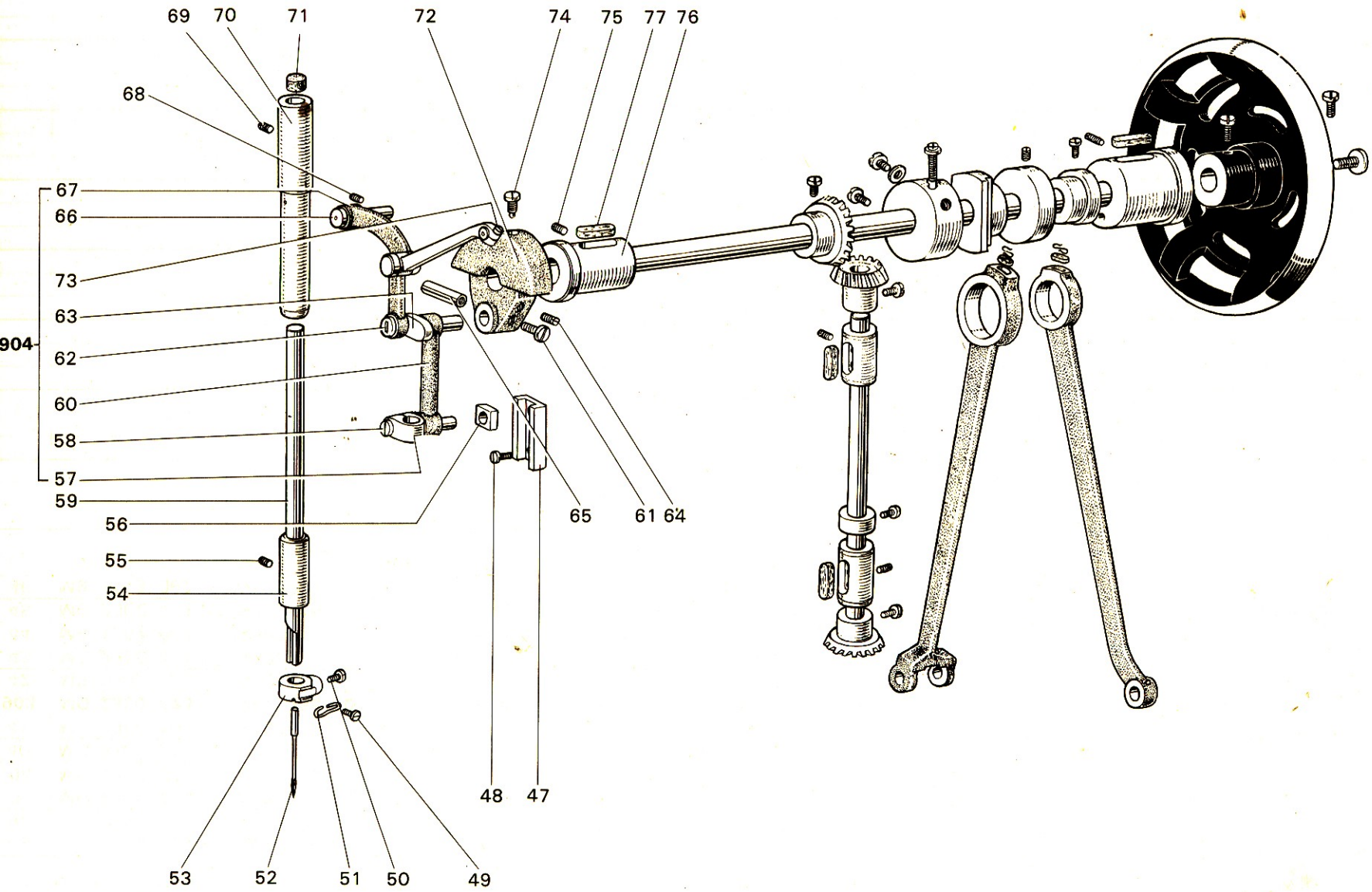

# LEVER MECHANISM

| Fig. No. | サービス部品コード Part No. | 資材コード Code No. | 部品名 | Name of Part | 備考 Remarks |
|---|---|---|---|---|---|
| 47 | MG 23C0 662 | W456582-01 | 針棒クランクガイド | Needle bar crank guide | |
| 48 | M9 1110 002 | W500294 | 平ネジ 11/64(40)×8 | Set screw for Fig.47 | |
| 49 | M9 0906 002 | W500791 | 平ネジ 9/64(40)×4.5 | Set screw for Fig.51 | |
| 50 | M9 1501 003 | B 508963 | 丸平ネジ 15/64(28)×10 | Set screw for Fig.53 | |
| 51 | MG 23C2 181 | W502730 | 糸カケ(針止メ用) | Needle clamp thread guide | |
| 52 | | W465212 | 針 DD×1 #25 | Needle DD×1(#25) | |
| 53 | MG 23C0 679 | W456584 | 針止メ | Needle clamp | |
| 54 | MG 23C0 664 | W502705 | 針棒メタル(下) | Needle bar bushing(lower) | |
| 55 | M9 1108 001 | B 503846 | 頭ナシ止メネジ 11/64(40)×5.5 | Set screw for Fig.54 | |
| 56 | MG 23C0 325 | W502717 | 角駒 | Needle bar connecting block | |
| **904** | **MG 23E0 582** | | **天ビン(組)** | **Thread take up lever assembly** | |
| 57 | | W456581-01 | 針棒ダキ | Needle bar holder | Fig.No.904ニ含ム |
| 58 | M9 1251 002 | W20466-A | 平ネジ 3/16(32)×12 | Set screw for Fig.57 | 〃 |
| 59 | MG 23C0 660 | W456580-01 | 針棒 | Needle bar | |
| 60 | | W456583-01 | 針棒クランクロット | Needle bar connecting link | Fig.No.904ニ含ム |
| 61 | M9 1210 002 | W501247 | 平ネジ 3/16(28)×10 | Set screw for Fig.72 | |
| 62 | M9 1181 003 | W502725 | 丸平ネジ(左) 11/64(40)×13.5 | Set screw for Fig.59 | Fig.No.904ニ含ム |
| 63 | | W456588-01 | 天ビンクランク | Thread take up lever link | 〃 |
| 64 | M9 2001 001 | W502218 | 頭ナシ止メネジ 5/16(24)×8 | Set screw for Fig.72 | |
| 65 | M9 0511 063 | W502731 | 特殊ピン | Thread take up lever hinge pin | |
| 66 | | W502706 | 天ビン支工軸 | Thread take up lever link hinge pin | Fig.No.904ニ含ム |
| 67 | | W456585 | 天ビン | Thread take up lever | 〃 |
| 68 | M9 1513 001 | B 509060 | 頭ナシ止メネジ 15/64(28)×11 | Set screw for Fig.70 | |
| 69 | M9 1106 001 | B 509266 | 頭ナシ止メネジ 11/64(40)×4.3 | Set screw for Fig.70 | |
| 70 | MG 23C0 663 | W456579-01 | 針棒メタル(上) | Needle bar bushing(upper) | |
| 71 | MG 23C0 740 | W502203 | フェルト | Felt | |
| 72 | MG 23C0 383 | W456589-01 | クランク | Needle bar crank | |
| 73 | M9 0601 002 | W502723 | 平ネジ 3/32(52)×6 | Set screw for Fig.72 | Fig.No.904ニ含ム |
| 74 | M9 1802 006 | B 503851 | 棒先平ネジ 9/32(28)×14 | Set screw for Fig.72 | |
| 75 | M9 1513 001 | B 509060 | 頭ナシ止メネジ 15/64(28)×11 | Set screw for Fig.76 | |
| 76 | MG 23C0 232 | W45 659-01 | 上軸メタル(左) | Arm shaft bushing(left) | |
| 77 | MG 23C1 740 | W502486 | フェルト | Felt | |

# DY-253形　上軸部分　UPPER SHAFT MECHANISM

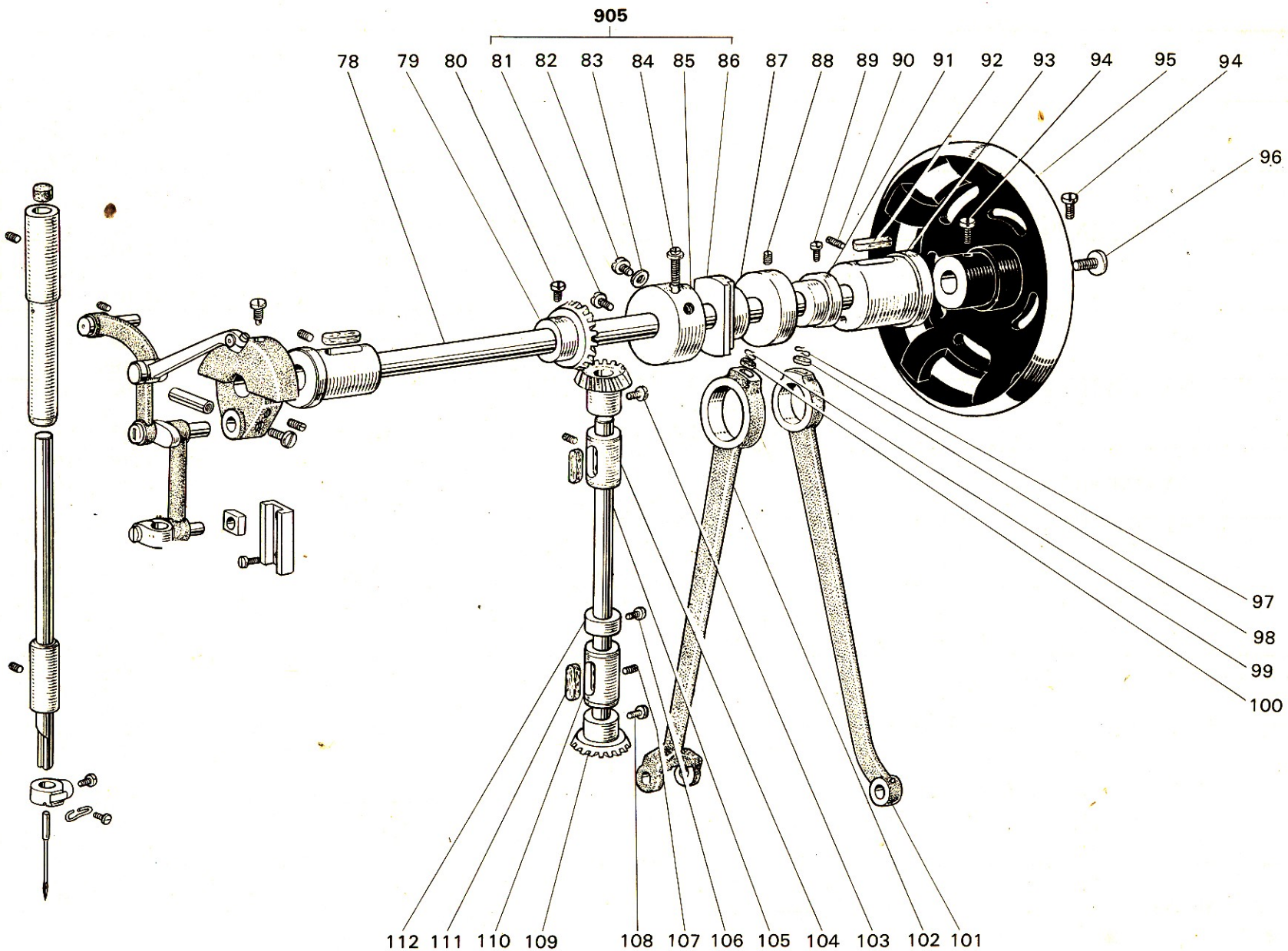

| Fig. No. | サービス部品コード Part No. | 資材コード Code No. | 部品名 | Name of Part | 備考 Remarks |
|---|---|---|---|---|---|
| 78 | MG 23C0 230 | W322765-01 | 上軸 | Arm shaft | |
| 79 | MG 23C0 331 | W456598-01 | 傘歯車(上軸) | Bevel gear for arm shaft | |
| 80 | M9 1602 002 | W502703 | 平ネジ 1/4(40)×9 | Set screw for Fig.79 | |
| **905** | **MG 23E0 490** | | **水平送り調節体(組)** | **Feed cam assembly** | |
| 81 | M9 1107 002 | W500092 | 平ネジ 11/64(40)×5.5 | Set screw for Fig.85 | Fig.No.905ニ含ム |
| 82 | M9 1504 002 | B 508963 | 平ネジ 15/64(28)×10 | Set screw for Fig.85 | 〃 |
| 83 | | W465217 | 座金 | Washer for Fig.82 | 〃 |
| 84 | M9 1203 004 | W500442 | 水平送り調節ネジ 3/16(28)×24 | Thumb screw for feed cam | 〃 |
| 85 | | W460576-01 | 水平送り調節体 | Feed cam regulator | 〃 |
| 86 | | W460577-01 | 水平送りカム | Feed cam | 〃 |
| 87 | MG 23C0 352 | W459362 | カラー | Collar | |
| 88 | M9 1516 001 | W500006 | 頭ナシ止メネジ 15/64(28)×15 | Set screw for Fig.87 | |
| 89 | M9 1504 002 | B 508963 | 平ネジ 15/64(28)×10 | Set screw for Fig.91 | |
| 90 | M9 1513 001 | B 509060 | 頭ナシ止メネジ 15/64(28)×11 | Set screw for Fig.93 | |
| 91 | MG 23C0 461 | W459318-01 | 上下送りカム | Feed lifting cam | |
| 92 | MG 23C1 740 | W502486 | フェルト | Felt | |
| 93 | MG 23C0 233 | W459322-01 | 上軸メタル(右) | Arm shaft bushing(right) | |
| 94 | M9 1802 002 | W462896 | 平ネジ 9/32(28)×16 | Set screw for Fig.95 | |
| 95 | MG 23C0 682 | W322766-01 | ハズミ車 | Balance wheel | |
| 96 | M9 2202 003 | W500246 | 丸平ネジ 11/32(28)×17 | Set screw for Fig.95 | |
| 97 | MF 60A0 700 | W500836 | バネ | Spring for Fig.98 | |
| 98 | MG 23C2 740 | W500738-02 | フェルト | Felt for Fig.101 | |
| 99 | MF 60A0 700 | W500836 | バネ | Spring for Fig.100 | |
| 100 | MG 23C2 740 | W500738-02 | フェルト | Felt for Fig.102 | |
| 101 | MG 23C0 385 | W322770-01 | クランクロット(上,下) | Feed rock shaft connecting rod(front) | |
| 102 | MG 23C0 386 | W322767-01 | クランクロット(水平) | Feed rock shaft connecting rod(back) | |
| 103 | M9 1602 002 | W502703 | 平ネジ 1/4(40)×9 | Screw for Fig.115 | |
| 104 | MG 23C0 521 | W457538-01 | 竪軸メタル(上) | Feed lifting rock shaft bushing(upper) | |
| 105 | MG 23C0 520 | W457501-01 | 竪軸 | Feed lifting rock shaft | |
| 106 | M9 1602 002 | W502703 | 平ネジ 1/4(40)×9 | Screw for Fig.112 | |
| 107 | M9 1513 001 | B 509060 | 頭ナシ止メネジ 15/64(28)×11 | Screw for Fig.110 | |
| 108 | M9 1602 002 | W502703 | 平ネジ 1/4(40)×9 | Screw for Fig.109 | |
| 109 | MG 23C0 334 | W457503-01 | 傘歯車(竪軸下) | Bevel gear(lower) | |
| 110 | MG 23C0 522 | W459371-01 | 竪軸メタル(下) | Feed lifting rock shaft bushing(lower) | |
| 111 | MG 23C3 740 | W500043-02 | フェルト | Felt | |
| 112 | MG 23C1 352 | W502001-02 | カラー | Collar | |

# DY-253形　竪軸部分　VERTICAL SHAFT MECHANISM

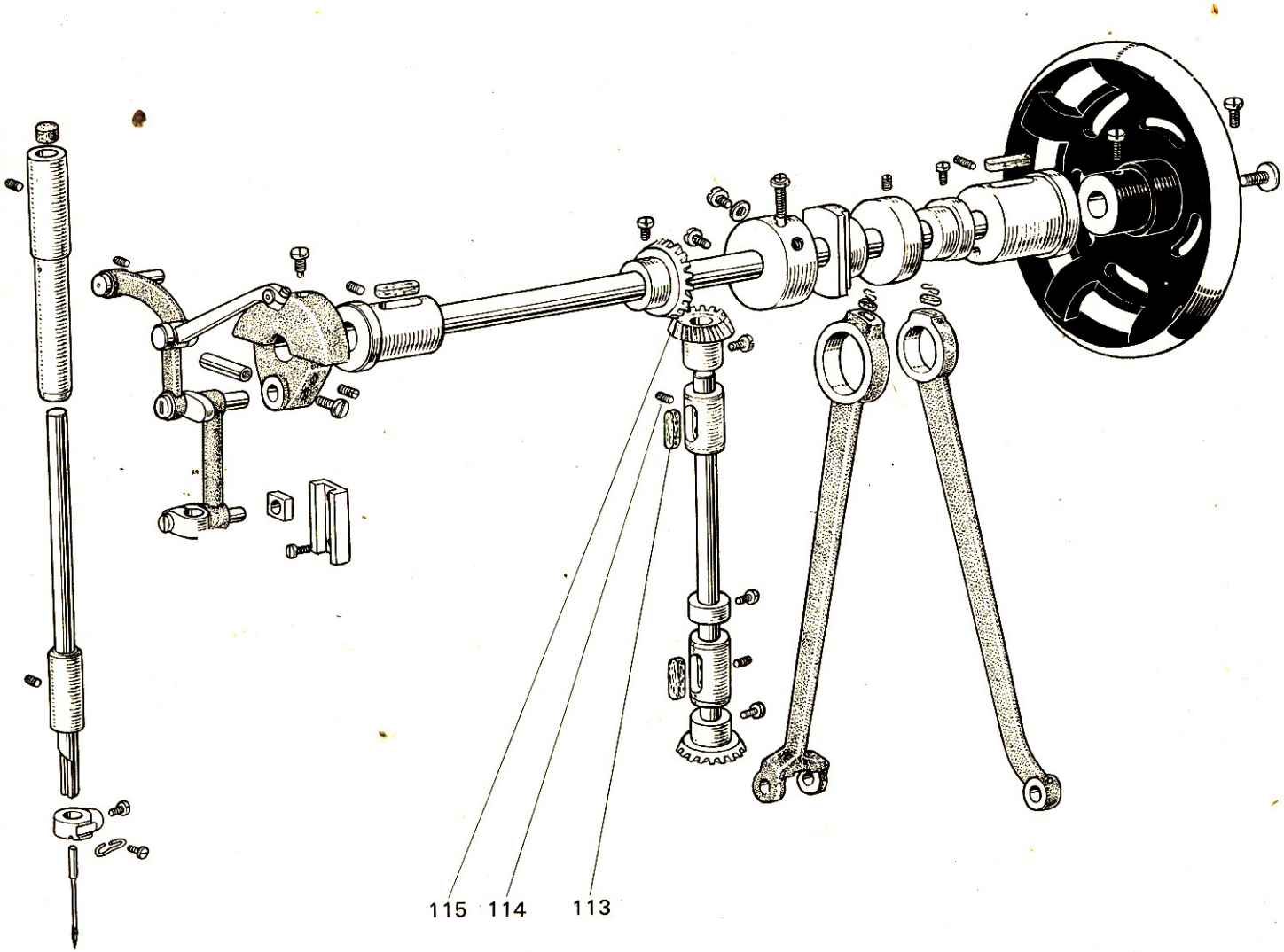

| Fig. No. | サービス部品コード Part No. | 資材コード Code No. | 部品名 | Name of Part | 備考 Remarks |
|---|---|---|---|---|---|
| 113 | MG 23C3 740 | W500043-02 | フェルト | Felt | |
| 114 | M9 1513 001 | B 509060 | 頭ナシ止メネジ 15/64(28)×11 | Screw for Fig.104 | |
| 115 | MG 23C0 333 | W457502-01 | 傘歯車(竪軸上) | Bevel gear(upper) | |

# DY-253形　カマ、送り機構　ROTATING HOOK & FEED MECHANISM

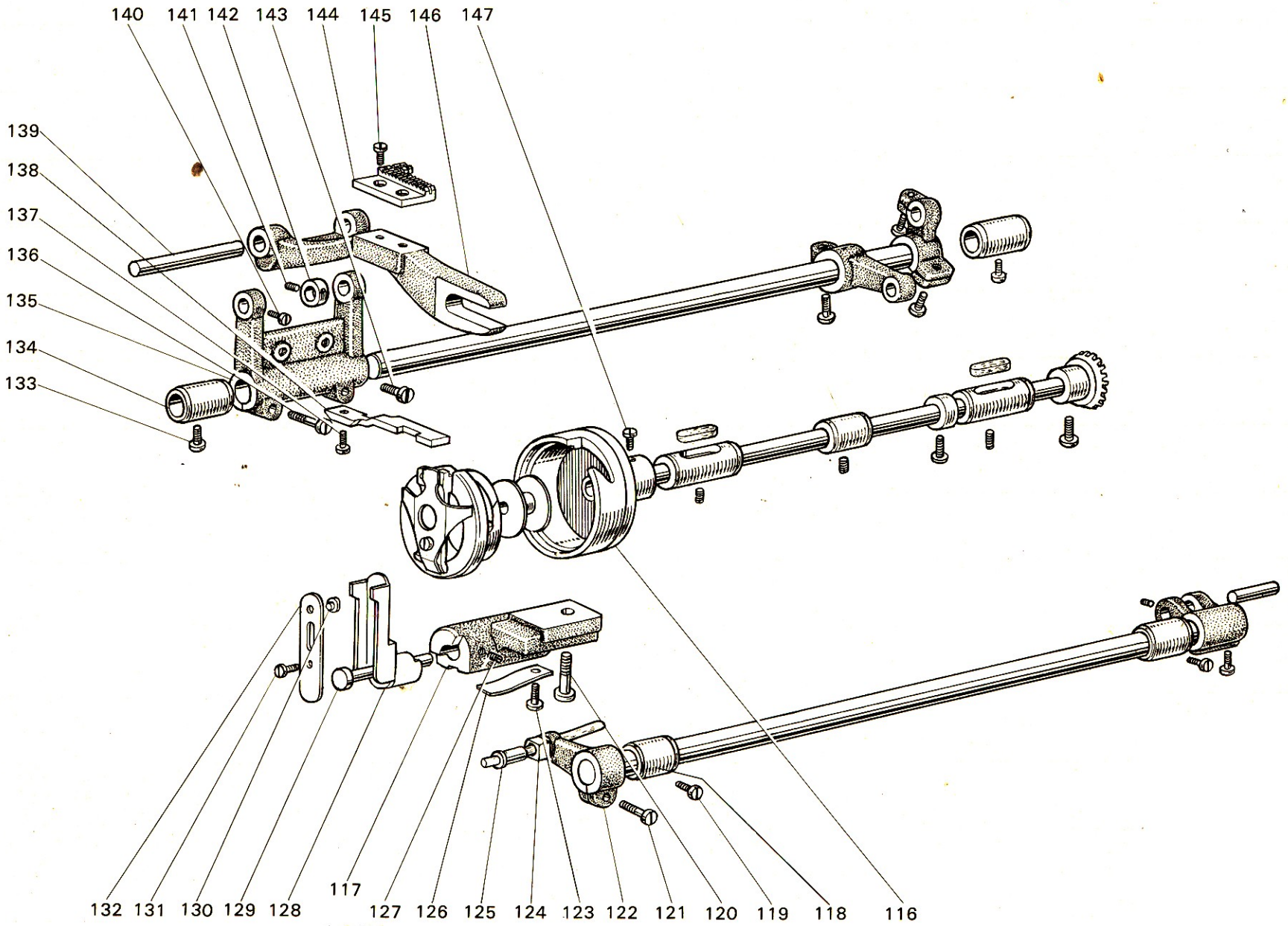

| Fig. No. | サービス部品コード Part No. | 資材コード Code No. | 部品名 | Name of Part | 備考 Remarks |
|---|---|---|---|---|---|
| 116 | MG 23E0 121 | | 外ガマ(組) | Rotating hook assembly | |
| **906** | **MG 23E0 616** | | **カマ押エ(組)** | **Rotating hook positioner assembly** | |
| 117 | MG 23C0 781 | W457544 | カマ押エ台 | Rotating hook positioner | Fig.No.906ニ含ム |
| 118 | MG 23C0 285 | W457554-01 | 送り軸メタル | Feed lifting rock shaft bushining | |
| 119 | M9 1502 002 | W500509 | 平ネジ 15/64(28)×12 | Screw for Fig.118 | |
| 120 | M9 2051 003 | W502313-02 | 丸平ネジ 5/16(24)×26 | Screw for Fig.117 | |
| 121 | M9 1505 002 | W500183-01 | 平ネジ 15/64(28)×14 | Screw for Fig.122 | |
| 122 | MG 23C0 276 | W457520-01 | 送り腕(上下左)(組) | Feed lifting rock shaft crank | |
| 123 | M9 1108 002 | B 509289 | 平ネジ 11/64(40)×7 | Screw for Fig.126 | Fig.No.906ニ含ム |
| 124 | MG 23C1 325 | W449955-02 | 角駒 | Square block | Fig.No.122ニ含ム |
| 125 | M9 0606 063 | W502057 | コロ軸 | Square block set pin | 〃 |
| 126 | MG 23C0 192 | W502719 | 板バネ | Spring | Fig.No.906ニ含ム |
| 127 | M9 1506 001 | B 509087 | 頭ナシ止メネジ 15/64(28)×7 | Screw for Fig.117 | 〃 |
| 128 | MG 23C0 257 | W457545 | カマ押エ腕 | Rotating hook positioner crank | 〃 |
| 129 | M9 0709 063 | W502720 | 平ピン | Set pin for Fig.128 | 〃 |
| 130 | M9 0402 063 | W502721 | カシメピン | Set pin for Fig.132 | 〃 |
| 131 | M9 0909 003 | W501901 | 丸平ネジ 9/64(40)×6 | Screw for Fig.132 | 〃 |
| 132 | MG 23C0 258 | W457546 | 押エ板バネ | Rotating hook positioner spring | 〃 |
| 133 | M9 1502 002 | W500509-02 | 平ネジ 15/64(28)×12 | Screw for Fig.134 | |
| 134 | MG 23C0 285 | W457554-01 | 送り軸メタル | Feed rock shaft bushing(left) | |
| 135 | MG 23C0 278 | W459308-01 | 送り腕(水平、左) | Feed rock shaft crank(left) | |
| 136 | M9 1603 003 | W501009 | 丸平ネジ 1/4(24)×16 | Screw for Fig.135 | |
| 137 | M9 1204 003 | B 508978 | 丸平ネジ 3/16(28)×12 | Screw for Fig.138 | |
| 138 | MG 23C0 229 | W457542-01 | 内ガマ止メ | Rotating hook positioner | |
| 139 | MG 23C0 283 | W502779 | 送り台支エ軸 | Feed bar shaft | |
| 140 | M9 1108 002 | B 509289 | 平ネジ 11/64(40)×7 | Screw for Fig.135 | |
| 141 | M9 1506 001 | B 509087 | 頭ナシ止メネジ 15/64(28)×7 | Screw for Fig.146 | |
| 142 | MG 23C2 352 | B 422844-02 | カラー | Collar for Fig.139 | |
| 143 | M9 0906 002 | W500791 | 平ネジ 9/64(40)×4.5 | Screw for Fig.135 | |
| 144 | MG 23C0 104 | W322769-01 | 送り | Feed dog | |
| 145 | M9 0912 002 | W500713 | 平ネジ 9/64(40)×8.5 | Screw for Fig.144 | |
| 146 | MG 23C0 281 | W322768-01 | 送り台 | Feed bar | |
| 147 | | | カマセットネジ | Screw for Fig.116 | Fig.No.116ニ含ム |

# DY-253形　下軸部分　LOWER SHAFT MECHANISM

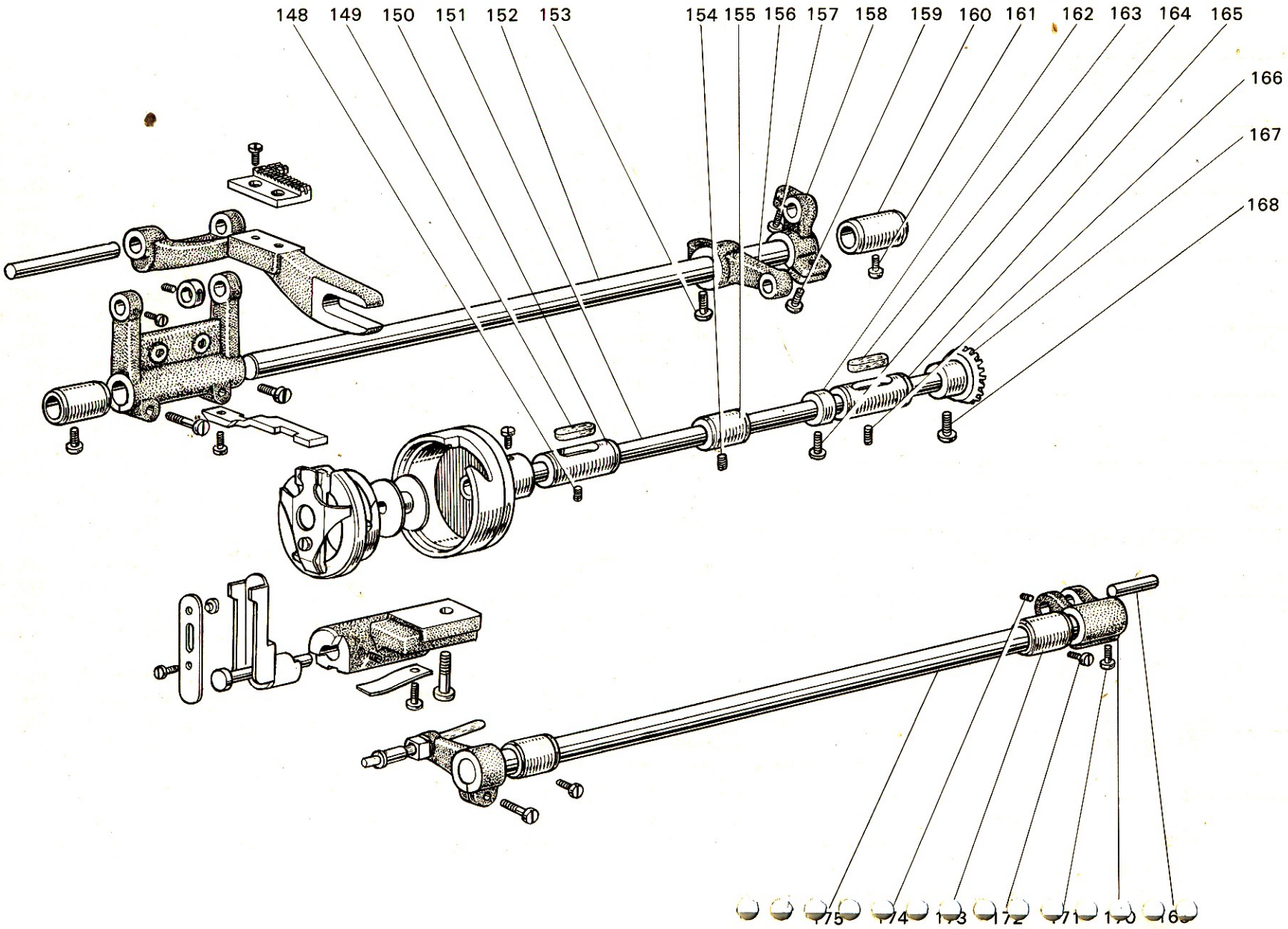

# DY 253形 下送り 2針 ロックステッチ ミシン

| Fig. No. | サービス部品コード Part No. | 資材コード Code No. | 部品名 | Name of Part | 備考 Remarks |
|---|---|---|---|---|---|
| 148 | M9 1513 001 | B 509060 | 頭ナシ止メネジ 15/64(28)×11 | Screw for Fig.150 | |
| 149 | MF 60A0 740 | W500042 | フェルト | Felt | |
| 150 | MG 23C0 451 | W459371-02 | 下軸メタル(左) | Rotating hook shaft bushing(left) | |
| 151 | MG 23C0 450 | W457506-01 | 下軸 | Rotating hook shaft | |
| 152 | MG 23C0 491 | W461012 | 水平送り軸 | Feed rock shaft | |
| 153 | M9 1603 003 | W501009-01 | 丸平ネジ 1/4(24)×16 | Screw for Fig. 156 | |
| 154 | M9 1111 001 | B 503852 | 頭ナシ止メネジ 11/64(40)×10 | Screw for Fig.155 | |
| 155 | MG 23C0 453 | W502718 | 下軸メタル(中) | Rotating hook shaft bushing(middle) | |
| 156 | MG 23C1 465 | W457550-02 | 上部水平送り腕(右) | Feed lifting connecting crank(right) | |
| 157 | M9 1203 002 | B 509178 | 平ネジ 3/16(28)×15 | Screw for Fig.156 | |
| 158 | MG 23C0 279 | W459372-01 | 送り腕(水平右) | Feed rock shaft(right) | |
| 159 | M9 1603 003 | W501009 | 水平ネジ 1/4(24)×16 | Screw for Fig.158 | |
| 160 | MG 23C0 285 | W457554-01 | 送り軸メタル | Feed rock shaft crank bushing | |
| 161 | M9 1502 002 | W500509-02 | 平ネジ 15/64(28)×12 | Screw for Fig.160 | |
| 162 | MG 23C1 352 | W502001-02 | カラー | Collar for Fig.151 | |
| 163 | MG 23C3 740 | W500043-02 | フェルト | Felt for Fig.165 | |
| 164 | M9 1602 002 | W502703 | 平ネジ 1/4(40)×9 | Screw for Fig.162 | |
| 165 | MG 23C0 452 | W457538-02 | 下軸メタル(右) | Rotating hook shaft bushing(right) | |
| 166 | M9 1513 001 | B 509060 | 頭ナシ止メネジ 15/64(28)×11 | Screw for Fig.165 | |
| 167 | MG 23C0 332 | W457507-01 | 傘歯車(下軸) | Bevel gear for lower shaft | |
| 168 | M9 1602 002 | W502703 | 平ネジ 1/4(40)×9 | Screw for Fig.167 | |
| 169 | M9 0902 060 | W501107 | ピン 9.53φ×18 | Set pin for Fig.170 | |
| 170 | MG 23C0 277 | W462645 | 送り腕(上下右) | Feed lifting rock shaft crank(right) | |
| 171 | M9 1502 002 | W500509-02 | 平ネジ 15/64(28)×12 | Screw for Fig.170 | |
| 172 | M9 1502 002 | W500509-02 | 平ネジ 15/64(28)×12 | Screw for Fig.173 | |
| 173 | MG 23C0 285 | W457554-01 | 送り軸メタル | Feed lifing rock shaft crank bushing(right) | |
| 174 | M9 1108 002 | B 509289 | 平ネジ 11/64(40)×7 | Screw for Fig.169 | |
| 175 | MG 23C0 460 | W461013 | 上下送り軸 | Feed lifting rock shaft | |

# DY-253形　上部送り機構　UPPER FEED MECHANISM

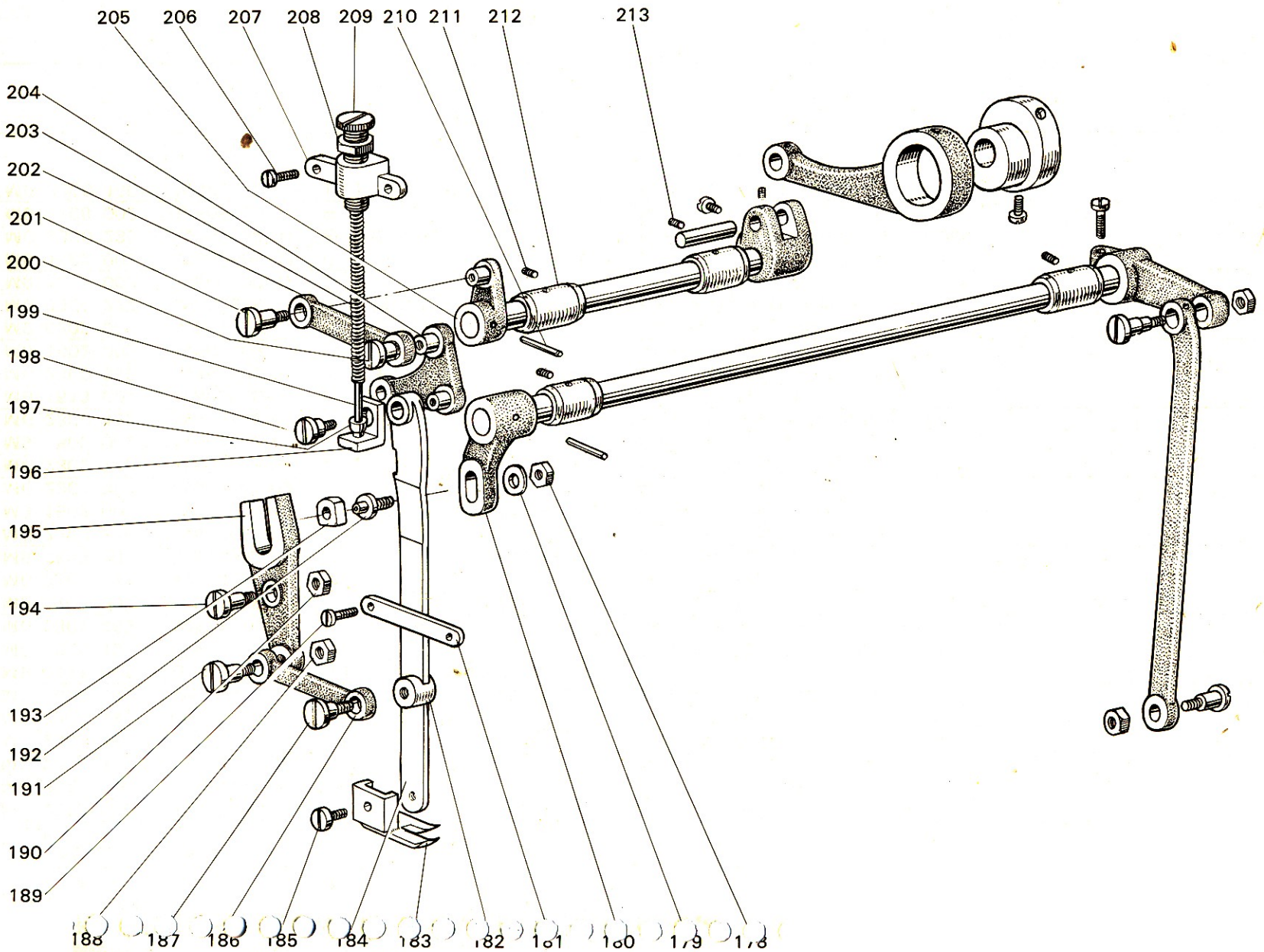

| Fig. No. | サービス部品コード Part No. | 資材コード Code No. | 部品名 | Name of Part | 備考 Remarks |
|---|---|---|---|---|---|
| 178 | M9 1601 045 | W501989 | ナット 1/4(24)×3.5 | Nut for Fig.193 | |
| 179 | M9 0607 050 | W462759 | 座金 M6 | Washer for Fig.178 | |
| 180 | MG 23C0 464 | W464054 | 送り腕(上部水平左) | Feed rock shaft crank(left) | |
| 181 | MG 23C0 296 | W502715 | 送り足支工案内 | Walking foot guide link | |
| 182 | | W502794 | ブッシュ | Walking foot guide bushing | |
| 183 | MG 23C0 294 | W457549 | 送り足 | Walking foot | |
| 184 | MG 23C0 295 | W324527 | 送り足支工 | Walking foot guide supporter | |
| 185 | M9 1108 002 | B 509289 | 平ネジ 11/64(40)×7 | Screw for Fig.183 | |
| 186 | MG 10B0 910 | W457552-01 | リンク | Walking foot guide link | |
| 187 | M9 1602 015 | W501245 | 段付平ネジ 1/4(24)×18 | Screw for Fig.186 | |
| 188 | M9 1601 045 | W501989 | ナット 1/4(24)×3.5 | Nut for Fig.191 | |
| 189 | M9 1110 002 | W500294 | 平ネジ 11/64(40)×8 | Screw for Fig.181 | |
| 190 | M9 1503 045 | W501843 | ナット 15/64(28)×5.5 | Nut for Fig.194 | |
| 191 | M9 1602 015 | W501245 | 段付平ネジ 1/4(24)×18 | Screw for Fig.186 | |
| 192 | M9 5005 063 | W464052 | コロ軸 | Feed connecting rod | |
| 193 | MG 30B0 411 | W443980 | コロ | Slide block | |
| 194 | M9 1507 015 | W466842 | 段付平ネジ 15/64(28)×23.5 | Screw for Fig.195 | |
| 195 | MG 23C0 950 | W459317-01 | レバー | Feed connecting rod | |
| 196 | MG 23C0 226 | W502714 | 受ケ金 | Prop up washer Fig.199 | |
| 197 | | W502412 | 案内金 | Bell crank pin clamp | Fig.No.199ニ含ム |
| 198 | M9 1213 015 | W501569 | 段付平ネジ 3/16(28)×14.5 | Bell crank screw | |
| 199 | MG 23C0 157 | W502712 | 案内棒 | Bell crank pin | |
| 200 | M9 1210 002 | W501247 | 平ネジ 3/16(28)×10 | Screw for Fig.202 | |
| 201 | M9 1210 002 | W501247 | 平ネジ 3/16(28)×10 | Screw for Fig.202 | |
| 202 | MG 23C0 910 | W457526 | リンク | Feed lifting rock shaft link | |
| 203 | MF 40A1 572 | W446379-01 | ツル巻キバネ | Bell crank spring | |
| 204 | MG 23C0 763 | W457527-01 | ベルクランク | Bell crank | |
| 205 | MG 23C0 462 | W457525-01 | 送り腕(上部上下左) | Upper feed lifting rock shaft crank(left) | |
| 206 | M9 1110 002 | W500294 | 平ネジ 11/64(40)×8 | Screw for Fig.207 | |
| 207 | MG 23C0 261 | W4575-01 | 押工調節台 | Presser regulating bracket | |
| 208 | M9 2402 045 | B 509118 | ナット 3/8(28)×5 | Nut for Fig.209 | |
| 209 | M9 2401 035 | W457536-01 | 調節ネジ 3/8(28)×50 | Feed regulating thumb screw | |
| 210 | M9 0401 061 | W501209 | テーパーピン 4φ×23×1/50 | Taper pin for Fig.205 | |
| 211 | M9 1508 001 | B 509088 | 頭ナシ止メネジ 15/64(28)×8 | Screw for Fig.212 | |
| 212 | MG 23C1 285 | W457554-02 | 送り軸メタル | Upper feed lifting rock shaft bushing(left) | |
| 213 | M9 1508 001 | B 509088 | 頭ナシ止メネジ 15/64(28)×8 | Screw for Fig.214 | |

# DY-253形 上部送り機構 UPPER FEED MECHANISM

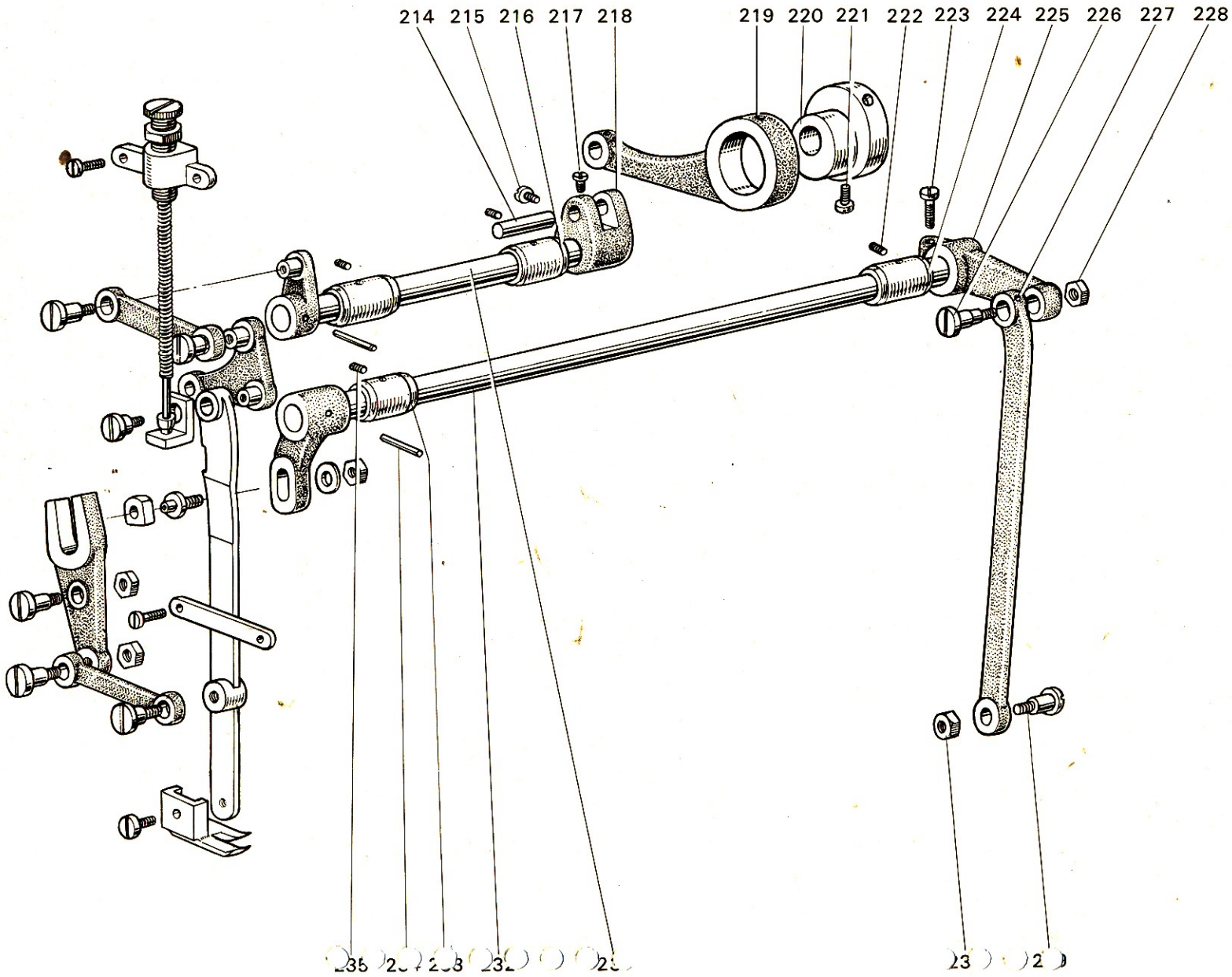

| Fig. No. | サービス部品コード Part No. | 資材コード Code No. | 部品名 | Name of Part | | | | | | | | 備考 Remarks |
|---|---|---|---|---|---|---|---|---|---|---|---|---|
| 214 | M9 0901 060 | W501107 | ピン 9.53φ×25 | Set pin | | | | | | | | |
| 215 | M9 1502 002 | W500509 | 平ネジ 15/64(28)×12 | Screw for Fig.218 | | | | | | | | |
| 216 | MG 23C0 285 | W457554-01 | 送り軸メタル | Upper feed lifting rock shaft bushing | | | | | | | | |
| 217 | M9 1108 002 | B 509289 | 平ネジ 11/64(40)×7 | Screw | | | | | | | | |
| 218 | MG 23C1 277 | W462646-01 | 送り腕(上下右) | Upper feed lifting rock shaft crank(right) | | | | | | | | |
| 219 | MG 23E0 384 | W457522-01 | クランクロット | Feed connecting crank rod | | | | | | | | |
| 220 | MG 23C0 760 | W457523-01 | 偏心輪 | Feed lifting eccentric | | | | | | | | |
| 221 | M9 1504 002 | B 508963 | 平ネジ 15/64(28)×10 | Screw for Fig.220 | | | | | | | | |
| 222 | M9 1508 001 | B 509088 | 頭ナシ止メネジ 15/64(28)×8 | Screw for Fig.224 | | | | | | | | |
| 223 | M9 1603 003 | W501009-01 | 丸平ネジ 1/4(24)×16 | Screw for Fig.225 | | | | | | | | |
| 224 | MG 23C0 285 | W457554-01 | 送り軸メタル | Feed driving shaft bushing(right) | | | | | | | | |
| 225 | MG 23C0 465 | W457550-01 | 上部水平送り腕(右) | Connecting rod hinge screw | | | | | | | | |
| 226 | M9 1803 015 | W454870-01 | 段付平ネジ 9/32(28)×26.1 | Screw | | | | | | | | |
| 227 | MG 23C0 910 | W322772-01 | リンク | Feed dring connecting link | | | | | | | | |
| 228 | M9 1802 045 | B 508961-01 | ナット 9/32(28)×4 | Nut for Fig.226 | | | | | | | | |
| 229 | M9 1803 015 | W454870-01 | 段付平ネジ 9/32(28)×26.1 | Connecting rod hinge screw | | | | | | | | |
| 230 | M9 1802 045 | B 508961-01 | ナット 9/32(28)×4 | Nut for Fig.229 | | | | | | | | |
| 231 | MG 23C1 460 | W461014 | 上部上下軸 | Feed lifting rock shaft(upper) | | | | | | | | |
| 232 | MG 23C0 467 | W457553-01 | 上部水平送り軸 | Feed driving rock shaft(upper) | | | | | | | | |
| 233 | MG 23C0 285 | W457554-01 | 送り軸メタル | Feed driving shaft bushing(left) | | | | | | | | |
| 234 | M9 0401 061 | W501209 | テーパーピン 4φ×23×1/50 | Taper pin for Fig.233 | | | | | | | | |
| 235 | M9 1508 001 | B 509088 | 頭ナシ止メネジ 15/64(28)×8 | Screw for Fig.233 | | | | | | | | |

# DY-253形　返し縫い機構　REVERSE LEVER MECHAISM

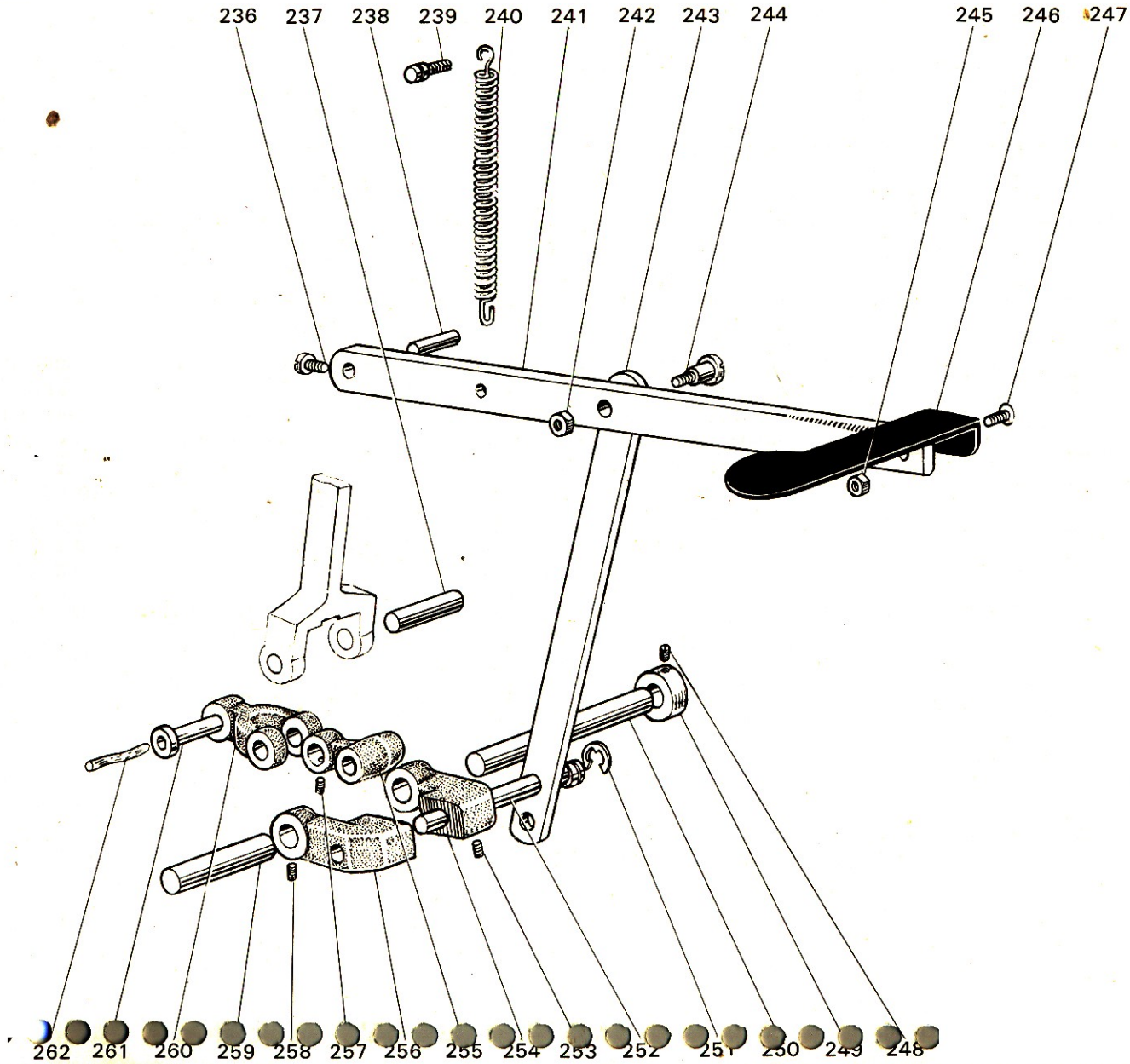

# (DY-253) 返し縫い機構 (REVERSE STITCH MECHANISM)

| Fig. No. | サービス部品コード Part No. | 資材コード Code No. | 部品名 | Name of Part | | | | | | | | 備考 Remarks |
|---|---|---|---|---|---|---|---|---|---|---|---|---|
| 236 | M9 0903 002 | B 509065 | 平ネジ 9/64(40)×6.5 | Screw for Fig.241 | | | | | | | | |
| 237 | M9 0703 060 | W502921 | ピン 7.94φ×29 | Pin | | | | | | | | |
| 238 | M9 0604 060 | W502791 | ピン 6.35φ×20 | Pin for Fig.241 | | | | | | | | |
| 239 | M9 1101 030 | W502032 | バネ掛ケピン 11/64(40)×19 | Spring guide pin | | | | | | | | |
| 240 | MG 23C0 572 | W461011 | ツル巻バネ | Spring | | | | | | | | |
| 241 | MG 23C0 322 | W461010 | 返シ縫イテコ | Reverse stitch lever | | | | | | | | |
| 242 | M9 1502 045 | W501883 | ナット 15/64(28)×4 | Nut | | | | | | | | |
| 243 | MG 23C0 953 | W459357-01 | 連結板 | Reverse stitch lever connecting Plate | | | | | | | | |
| 244 | M9 1506 015 | W501246 | 段付平ネジ 15/64(28)×16 | Screw | | | | | | | | |
| 245 | M9 1202 045 | W500001 | ナット 3/16(28)×4 | Nut | | | | | | | | |
| 246 | MN 15A0 321 | W459355-01 | 返シ縫イ板 | Reverse stitch lever plate | | | | | | | | |
| 247 | M9 1201 010 | W501934 | 皿ネジ 3/16(28)×10 | Lever plate screw | | | | | | | | |
| 248 | M9 1506 001 | B 509087 | 頭ナシ止メネジ 15/64(28)×7 | Screw | | | | | | | | |
| 249 | MM 11A0 352 | W446142-01 | カラー | Collar | | | | | | | | |
| 250 | MG 23C0 320 | W459373-01 | 返シ縫イ軸 | Reverse stitch shaft | | | | | | | | |
| 251 | M9 0507 065 | W465218 | E形止メ輪 7 | E shape stop ring | | | | | | | | |
| 252 | MG 23C0 454 | W502780 | 軸 | Pin for Fig.254 | | | | | | | | |
| 253 | M9 1506 001 | B 509087 | 頭ナシ止メネジ 15/64(28)×7 | Screw | | | | | | | | |
| 254 | MN 15A0 323 | W461018-01 | 返シ縫イ腕 | Reverse stitch crank(right) | | | | | | | | |
| 255 | MN 15A0 886 | W460582 | 揺動腕 | Bell crank | | | | | | | | |
| 256 | MN 15A0 323 | W461018-01 | 返シ縫イ腕 | Reverse stitch crank(left) | | | | | | | | |
| 257 | M9 1109 001 | W500985 | 頭ナシ止メネジ 11/64(40)×6.6 | Screw for Fig.255 | | | | | | | | |
| 258 | M9 1202 001 | W500151 | 頭ナシ止メネジ 3/16(28)×6 | Screw for Fig.256 | | | | | | | | |
| 259 | M9 0903 060 | W461064 | ピン 9.53φ×22 | Pin for Fig.256 | | | | | | | | |
| 260 | MN 15A0 910 | W460584 | リンク | Connecting link | | | | | | | | |
| 261 | M9 0707 063 | W501015 | ピン 7.94φ×22.5 | Pin for Fig.260 | | | | | | | | |
| 262 | | | 油ヒモ | Oil wick | | | | | | | | |

# DY-253形　押え上げ機構　PRESSER FOOT MECHANISM

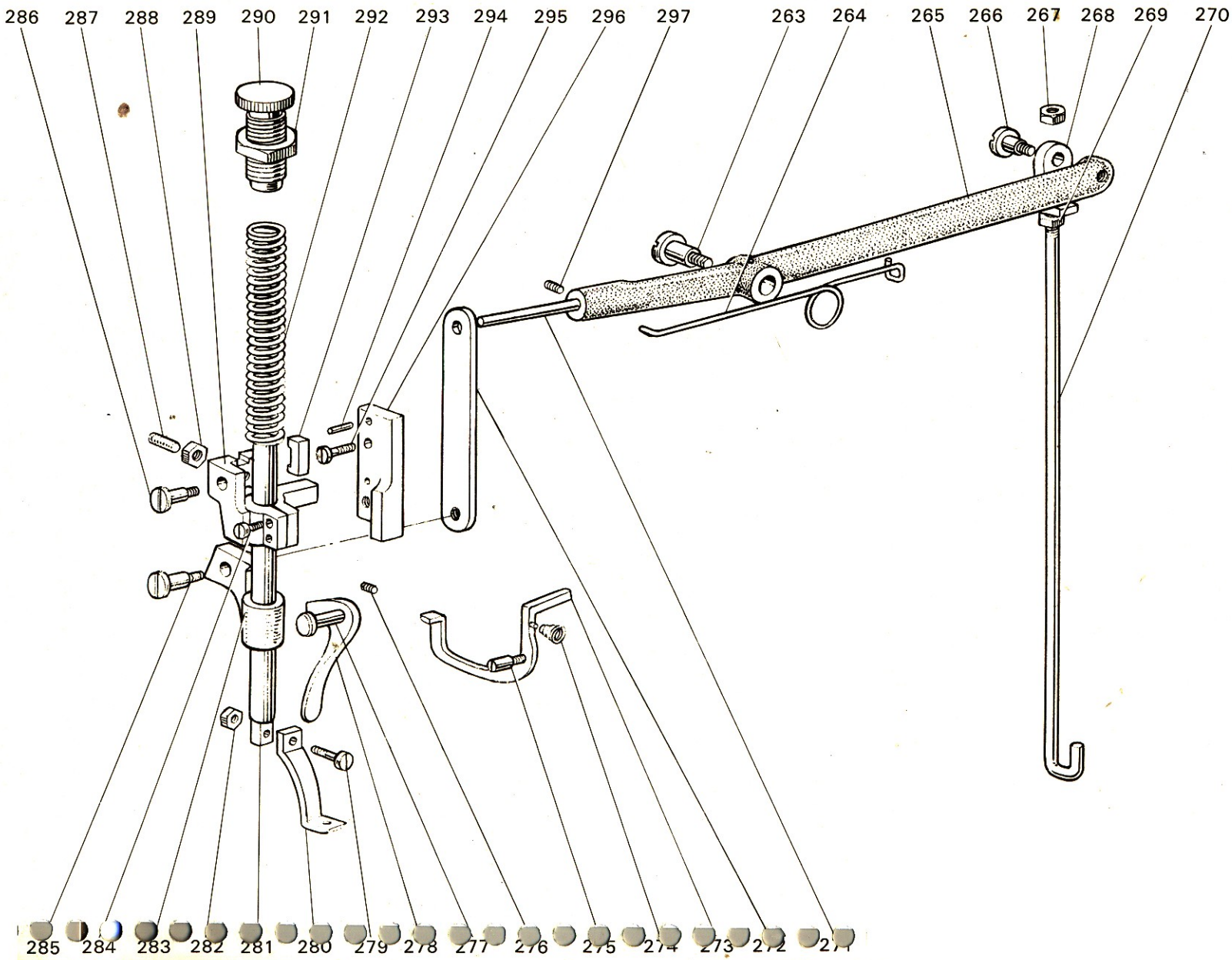

| Fig. No. | サービス部品コード Part No. | 資材コード Code No. | 部品名 | Name of Part | 備考 Remarks |
|---|---|---|---|---|---|
| 263 | M9 1551 016 | B 503843 | 段付丸平ネジ 15/64(24)×30 | Screw for Fig.265 | |
| 264 | MG 23C0 729 | W459375-01 | ヒネリバネ | Spring for Fig.265 | |
| 265 | | W322771-01 | ヒキ上ゲテコ | Knee lifter lifting lever link | |
| 266 | M9 1505 016 | B 509176-02 | 段付丸平ネジ 15/64(28)×10 | Screw for Fig.269 | |
| 267 | M9 1251 045 | B 509177-02 | ナット 3/16(32)×3 | Nut for Fig.266 | |
| 268 | MG 23C0 591 | W461007-01 | テコ接手 | Knee lifter rock shaft | |
| 269 | M9 1251 045 | B 509177-02 | ナット 3/16(32)×3 | Nut for Fig.270 | |
| 270 | MG 23C0 593 | W457521-01 | テコ引キ棒 | Lifting lever connecting rod | |
| 271 | M9 0605 060 | W461006-01 | ヒキ上ゲピン 6φ×60 | Knee lifter lever pin | |
| 272 | MG 23C0 720 | W502926 | ヒキ上ゲ板 | Knee lifting lever plate | |
| 273 | MG 23C0 220 | W456595-01 | 上糸ユルメ | Thread tension releasing guide | |
| 274 | MF 10A2 245 | B 409092-01 | 円錐バネ | Spring for Fig.273 | |
| 275 | M9 0903 033 | W459391 | ピンネジ 9/64(40)×12 | Screw for Fig.273 | |
| 276 | M9 1508 001 | B 509088 | 頭ナシ止メネジ 15/64(28)×8 | Set screw for Fig.278 | |
| 277 | M9 0704 063 | B 503977-02 | 押エ上ゲピン 7φ×19 | Presser bar lifter pin | |
| 278 | MG 23C0 252 | W457532-01 | 押エ上ゲ | Presser bar lifter | |
| 279 | M9 1112 002 | W501889 | 平ネジ 11/64(40)×12 | Screw for Fig.280 | |
| 280 | MG 23C0 256 | W457548-01 | 押エ足 | Presser foot | |
| 281 | MG 23C0 262 | W457528-01 | 押エ棒 | Presser bar | |
| 282 | M9 1106 045 | W500698 | ナット 11/64(40)×3 | Nut for Fig.279 | |
| 283 | MG 23C0 475 | W457531-01 | スベリ上ゲ | Presser bar lifter bracket | |
| 284 | M9 1203 002 | B 509178 | 平ネジ 3/16(28)×15 | Screw for Fig.289 | |
| 285 | M9 1251 015 | B 509180 | 段付平ネジ 3/16(32)×6 | Screw for Fig.283 | |
| 286 | M9 1210 002 | W501247 | 平ネジ 3/16(28)×10 | Screw for Fig.289 | |
| 287 | M9 1111 001 | B 503852 | 頭ナシ止メネジ 11/64(40)×10 | Screw for Fig.289 | |
| 288 | M9 1103 045 | W501528 | ナット 11/64(40)×3 | Nut for Fig.287 | |
| 289 | MG 23C0 265 | W457529-01 | 押エ棒ダキ | Presser bar holder | |
| 290 | M9 4001 035 | W457540-01 | 押エ調節ネジ 5/8(28)×49 | Presser regulating thumb screw | |
| 291 | M9 4001 045 | W461008-01 | ナット 5/8(28)×6 | Nut for Fig.290 | |
| 292 | MG 23C0 259 | W457541-01 | 押エバネ | Presser spring | |
| 293 | MG 23C0 751 | W502726 | 摺動子 | Presser bar slide | |
| 294 | M9 0304 060 | W501874 | ピン 3φ×12 | Pin for Fig.296 | |
| 295 | M9 1110 002 | W500294 | 平ネジ 11/16(40)×8 | Screw for Fig.296 | |
| 296 | MG 23C0 263 | W457533-01 | 押エ棒ダキ案内 | Presser bar holder guide | |
| 297 | M9 1508 001 | B 509088 | 頭ナシ止メネジ 15/64(28)×7 | Screw for Fig.265 | |

# -253形　給油機構　OIL LUBRICATION MECHANISM

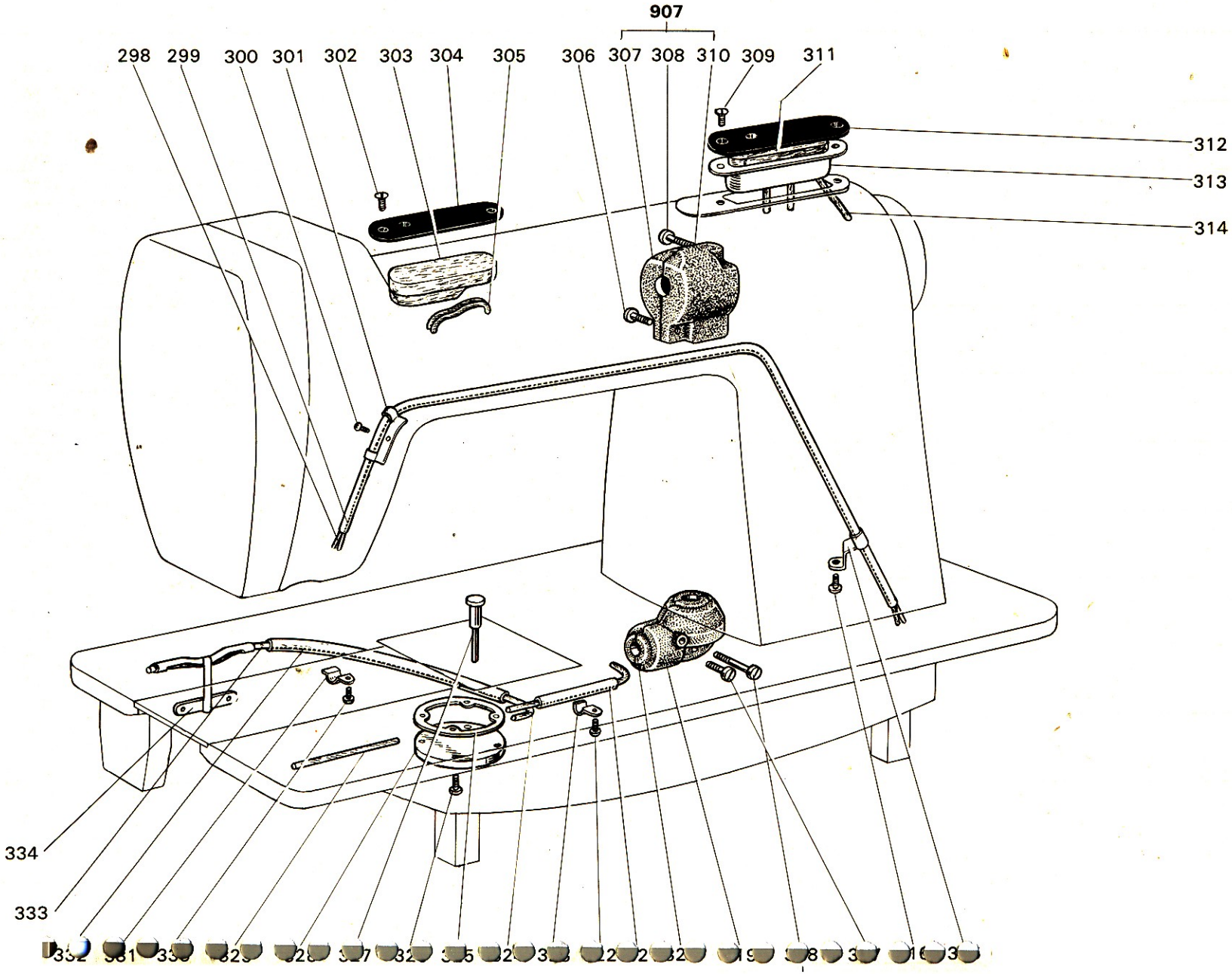

| Fig. No. | サービス部品コード Part No. | 資材コード Code No. | 部品名 | Name of Part | 備考 Remarks |
|---|---|---|---|---|---|
| 298 | | W444134 | 毛糸 | Oil wick | |
| 299 | MF 10A0 731 | W446232 | ビニールパイプ | Oil pipe | |
| 300 | M9 1110 002 | W500294 | 平ネジ 11/64(40)×8 | Screw for Fig.301 | |
| 301 | MG 23C0 689 | W461024 | パイプホルダ | pipe holder | |
| 302 | M9 0906 011 | B 509269 | 丸皿ネジ 9/64(40)×7 | Screw for Fig.304 | |
| 303 | MF 60A4 740 | W500905 | フェルト | Oil felt | |
| 304 | MG 23C0 742 | W445619 | フタ | Oil reservoir cover | |
| 305 | MF 10E2 148 | W464039 | 油ヒモ 2.5φ×100 | Oil wick | |
| 306 | M9 1852 002 | W501146 | 平ネジ 9/32(20)×16 | Screw for Fig.307 | Fig.No.907ニ含ム |
| **907** | **MG 23E0 711** | | **歯車箱上(組)** | **Arm shaft bevel gear box complete(upper)** | |
| 307 | | W456599 | 歯車箱(上左) | Arm shaft bevel gear box(left) | Fig.No907ニ含ム |
| 308 | M9 1503 002 | B 504000 | 平ネジ 15/64(28)×5 | Screw for Fig.307 | |
| 309 | M9 0906 011 | B 509269 | 丸皿ネジ 9/64(40)×7 | Screw for Fig.312 | |
| 310 | | W457500 | 歯車箱(上右) | Arm shaft bevel gear box(right) | Fig.No.907ニ含ム |
| 311 | MF 60A4 740 | W500905 | フェルト | Oil felt | |
| 312 | MG 23C0 742 | W445619 | フタ | Oil reservoir cover | |
| 313 | MG 23C0 139 | W447200-2 | 油タンク | Oil reservoir | |
| 314 | MF 10E2 148 | W464039 | 油ヒモ 2.5φ×100 | Oil wick | |
| 315 | MF 60A1 689 | W444233 | パイプホルダー | Oil pipe holder | |
| 316 | M9 1110 002 | W500294 | 平ネジ 11/64(40)×8 | Screw for Fig.315 | |
| **908** | **MG 23E0 712** | | **歯車箱下(組)** | **Hook shaft bevel gear box complete(lower)** | |
| 317 | M9 1852 002 | W501146 | 平ネジ 9/32(20)×16 | Set screw for Fig.319 | Fig.No.908ニ含ム |
| 318 | M9 1503 002 | B 504000 | 平ネジ 15/64(28)×5 | Set screw for Fig.319 | |
| 319 | | W457505 | 歯車箱(下右) | Hook shaft bevel gear box(right) | Fig.No.908ニ含ム |
| 320 | | W457504 | 歯車箱(下左) | Hook shaft bevel gear box(left) | 〃 |
| 321 | MF 10A0 731 | W446232 | ビニールパイプ | Oil pipe | |
| 322 | M9 1110 002 | W500294 | 平ネジ 11/64(40)×8 | Set screw for Fig.323 | |
| 323 | MF 10A0 689 | W444230 | パイプホルダー | Oil pipe holder | |
| 324 | MF 10E2 148 | W444138 | 油ヒモ 2.5φ×240 | Oil wick | |
| 325 | MN 10A1 691 | W444122-1 | パッキン | "O"ring | |
| 326 | M9 1118 002 | B 509061 | 平ネジ 11/64(40)×10 | Set screw for Fig.327 | |
| 327 | MG 23C0 250 | W502927 | オイルゲージ | Oil gauge | |
| 328 | MN 10A3 742 | W444237-1 | フタ | Cover | |
| 329 | MF 10E2 148 | W444138 | 油ヒモ 2.5φ×240 | Oil wick | |
| 330 | M9 1110 002 | W500294 | 平ネジ 11/64(40)×8 | Set screw for Fig.331 | |
| 331 | MF 10A0 689 | W444230 | パイプホルダー | Oil pipe holder | |
| 332 | MF 10A0 731 | W446232 | ビニールパイプ | Oil pipe | |
| 333 | MF 10A0 148 | W444138 | 油ヒモ 2.φ×240 | Oil wick | |
| 334 | MG 23C0 147 | W461023 | 油ヒモ支エ | Oil pipe holder | |

# DY-253形 付属品(付属品箱) ACCESSORIES BOX

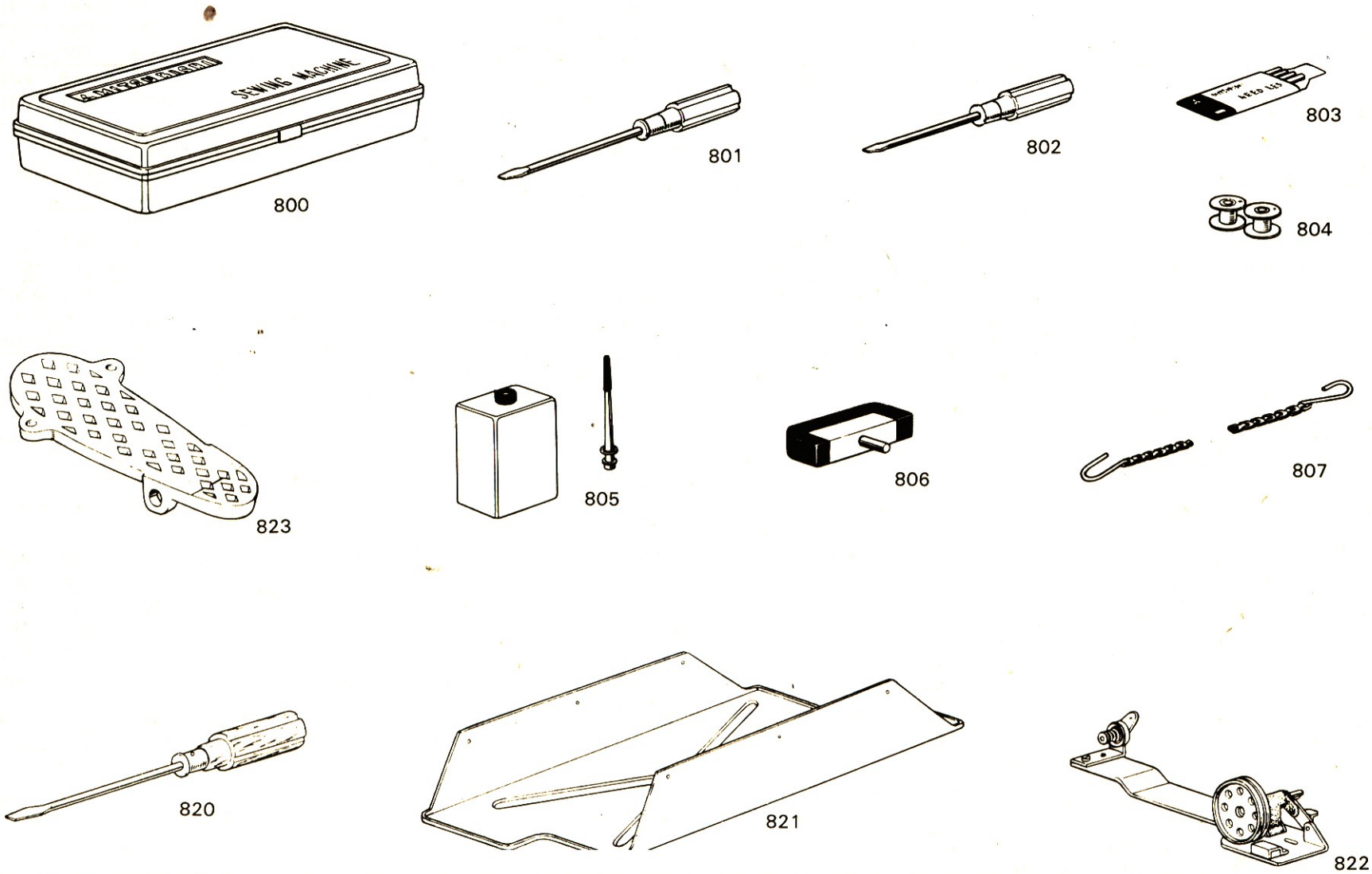

# 付属品(付属品箱) ACCESSORIES BOX

| Fig. No. | サービス部品コード Part No. | 資材コード Code No. | 部品名 | Name of Part | 備考 Remarks |
|---|---|---|---|---|---|
| 800 | MF 60A0 749 X | P 833000X01 | 付属品箱 | Accessories box | |
| 801 | MB 02A0 608 X | P 842003X01 | ドライバー(中) | Driver(medium) | |
| 802 | MB 02A1 608 X | P 842002X01 | ドライバー(小) | Driver(small) | |
| 803 | MG 23C0 128 X | | 針 DD×1#25 | Needle #DD×1 #25 | |
| 804 | MG 23C0 123 X | W457514 | ボビン | Bobbin | |
| 805 | MF 60A0 137 X | P 831001X01 | 油差し | Oil bottle | |
| 806 | MG 23C0 739 X | W502124 | ヒンジ | Table hinge | |
| 807 | MM 10A0 376 X | W322702H01 | 鎖 1.006mm | Chain | |
| 820 | MF 60A0 608 X | W319408 | ドライバー(大) | Driver(large) | |
| 821 | MG 23C0 131 X | W220633 | 油受 | Oil guard | |
| 822 | MG 23E0 190 X | | 糸巻仕掛 132K | Bobbin winber | |
| 823 | MG 23C0 748 X | W219080 | 踏板 | Treadle plate | |