SiRUBA®

銀翁牌工業用縫紉機

INDUSTRIAL SEWING MACHINE

C007JD

零件圖 PARTS LIST

26 pag.

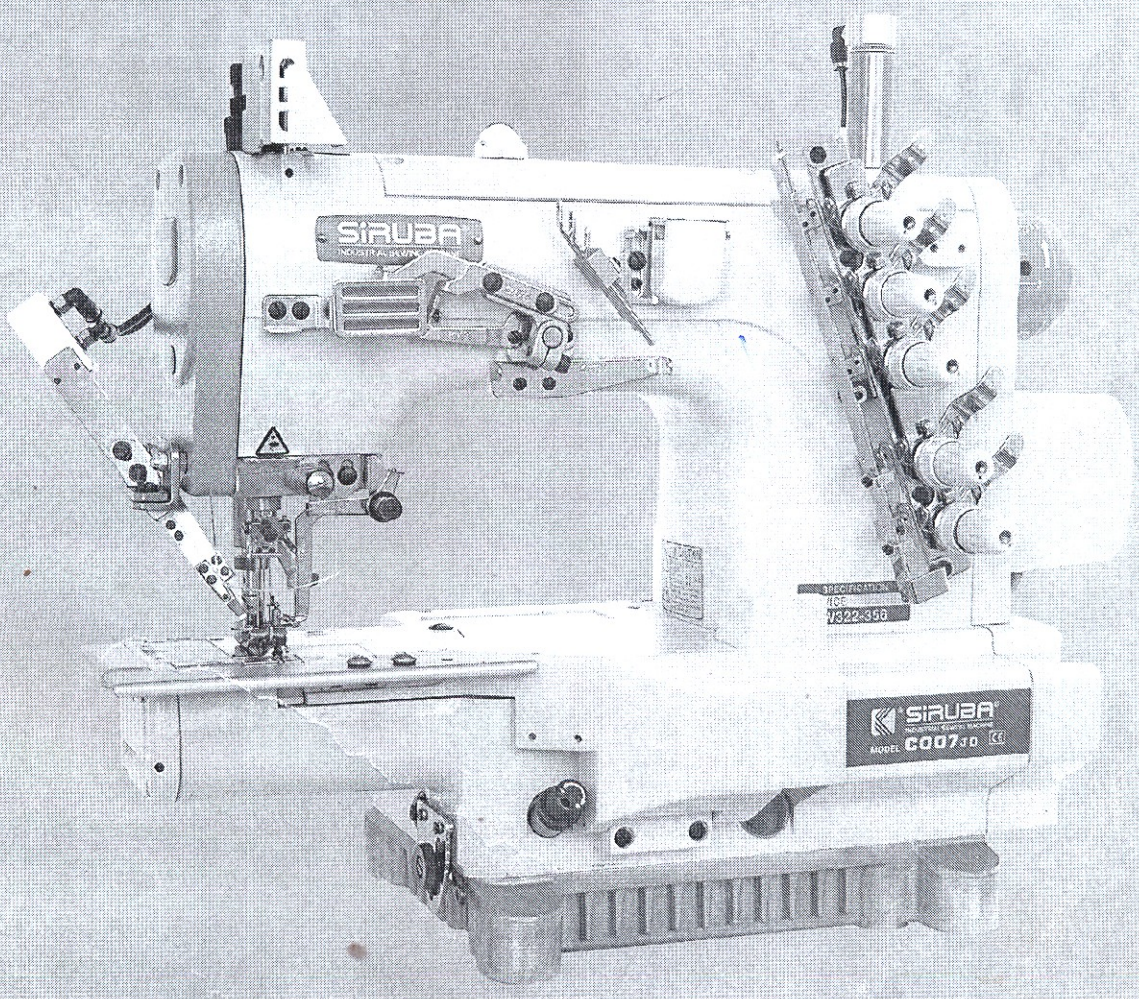

AM - LOJA

38 folhas

CE

高林股份有限公司

KAULIN MFG. CO., LTD.

MODEL 機 型	SUB-CLASS 規 格	NEEDLE CLAMP 針 座	NEEDLE PLATE 針 板	MAIN FEED DOG 主送具	DIFF. FEED DOG 差送具	PRESSER FOOT 押 具	SPREADER 上 叉	LOOPER 勾 針	CAM 偏心凸輪	NEEDLE 針 號
C007JD-W121 /CH	240 248 356 364	M5240 M5248 M5356 M5364	E 3514P E 3515P E 3836P E 3837P	D 4206 D 4206 D 4206 D 4207	H 4458 H 4458 H 4458 H 4459	P2544 P2545 P2446 P2447	MH41	MT01	MF01-A	UY128GAS #10
C007JD-U121 /CH	240 248 356 364	M5240 M5248 M5356 M5364	E 3514P E 3515P E 3836P E 3837P	D 4206 D 4206 D 4206 D 4207	H 4458 H 4458 H 4458 H 4459	P2544 P2545 P2446 P2447	—	MT01	MF01-A	UY128GAS #10
C007JD-W122 /CH	240 248 256 356 364	M5240 M5248 M5356 M5356 M5364	E 3524P E 3525P E 3826S E 3826P E 3827P	D 4206 D 4206 D 4206 D 4206 D 4207	H 4458 H 4458 H 4458 H 4458 H 4459	P2544 P2545 P2446 P2446 P2447	MH41	MT01	MF01-A	UY128GAS #10
C007JD-U122 /CH	240 248 256 356 364	M5240 M5248 M5356 M5356 M5364	E 3524P E 3525P E 3826S E 3826P E 3827P	D 4206 D 4206 D 4206 D 4206 D 4207	H 4458 H 4458 H 4458 H 4458 H 4459	P2544 P2545 P2446 P2446 P2447	—	MT01	MF01-A	UY128GAS #10
C007JD-W122 CH/UTP(UTR)	240 248 256 356 364	M5240 M5248 M5356 M5356 M5364	E 3524P E 3525P E 3826S E 3826P E 3827P	D 4206 D 4206 D 4206 D 4206 D 4207	H 4458 H 4458 H 4458 H 4458 H 4459	P2544 P2545 P2446 P2446 P2447	MH41	MT01	MF01-A	UY128GAS #10

註：P2544/2545 為固定式押具舌,亦可使用活動式押具舌 P2565代替P2544/P2545
P2446/2447 為固定式押具舌,亦可使用活動式押具舌 P2466代替P2446/2447

規格件表 CONVERSION CHART-1

規格件表 CONVERSION CHART-2

MODEL 機 型	SUB-CLASS 規 格	NEEDLE CLAMP 針 座	NEEDLE PLATE 針 板	MAIN FEED DOG 主送具	DIFF. FEED DOG 差送具	PRESSER FOOT 押 具	SPREADER 上 叉	LOOPER 勾 針	CAM 偏心凸輪	NEEDLE 針 號
C007JD-U122 CH/UTQ(UTS)	240 248 256 356 364	M5240 M5248 M5356 M5356 M5364	E 3524P E 3525P E 3826S E 3826P E 3827P	D 4206 D 4206 D 4206 D 4206 D 4207	H 4458 H 4458 H 4458 H 4458 H 4459	P2544 P2545 P2446 P2446 P2447	—	MT01	MF01-A	UY128GAS #10
C007JD-W122 /CHA	356	M5356	E 3826Q	D 4206	H 4458	P0216	MH41	MT01	MF01-A	UY128GAS #10
C007JD-U122 /CHA	356	M5356	E 3826Q	D 4206	H 4458	P0416	—	MT01	MF01-A	UY128GAS #10
C007JD-W123 /CH	356 364	M5356 M5364	E 3816P E 3817P	D 4206 D 4207	H 4458 H 4459	P2446 P2447	MH41	MT01	MF01-A	UY128GAS #10
C007JD-U123 /CH	356 364	M5356 M5364	E 3816P E 3817P	D 4206 D 4207	H 4458 H 4459	P2446 P2447	—	MT01	MF01-A	UY128GAS #10
C007JD-W123 CH/UTP(UTR)	356 364	M5356 M5364	E 3816P E 3817P	D 4206 D 4207	H 4458 H 4459	P2446 P2447	MH41	MT01	MF01-A	UY128GAS #10
C007JD-U123 CH/UTQ(UTS)	356 364	M5356 M5364	E 3816P E 3817P	D 4206 D 4207	H 4458 H 4459	P2446 P2447	—	MT01	MF01-A	UY128GAS #10
C007JD-W132 /CHE	240 248 356 364	M5240 M5248 M5356 M5364	E 2324P E 2325P E 2326P E 2327P	D 2109 D 2109 D 2110 D 2110	H 2219 H 2219 H 2220 H 2220	P2904 P2905 P2906 P2907	MH41	MT01	MF01-A	UY128GAS #10
C007JD-W132 CHE/UTP(UTR)	356 364	M5356 M5364	E 2326P E 2327P	D 2110	H 2220	P2906 P2907	MH41	MT01	MF01-A	UY128GAS #10

註：P2544/2545 為固定式押具舌,亦可使用活動式押具舌 P2565代替P2544/P2545
P2446/2447 為固定式押具舌,亦可使用活動式押具舌 P2466代替P2446/2447

MODEL 機 型	SUB-CLASS 規 格	NEEDLE CLAMP 針 座	NEEDLE PLATE 針 板	MAIN FEED DOG 主送具	DIFF. FEED DOG 差送具	PRESSER FOOT 押 具	SPREADER 上 叉	LOOPER 勾 針	CAM 偏心凸輪	NEEDLE 針 號
C007JD-W152 /CZP/RLQ	356 364	M5356 M5364	E4326 E4327	D 3216 D 3217	H 3262 H 3263	P2416 P2417	MH41	MT01	MF01-A	UY128GAS #10
C007JD-U152 /CZP/RLQ	356 364	M5356 M5364	E4326 E4327	D 3216 D 3217	H 3262 H 3263	P2416 P2417	—	MT01	MF01-A	UY128GAS #10
C007JD-W152 CZP/CLA/RLQ	356 364	M5356 M5364	E4326 E4327	D 3216 D 3217	H 3262 H 3263	P2416 P2417	MH41	MT01	MF01-A	UY128GAS #10
C007JD-U152 CZP/CLA/RLQ	356 364	M5356 M5364	E4326 E4327	D 3216 D 3217	H 3262 H 3263	P2416 P2417	—	MT01	MF01-A	UY128GAS #10
C007JD-W162	240 248 356 364	M5240 M5248 M5356 M5364	E3544 E3545 E3846 E3847	D4206 D4206 D4206 D4207	H4458 H4458 H4458 H4459	P2544 P2545 P2446 P2447	MH41	MT01A	MF91-A	UY128GAS #14~16
C007JD-U162	240 248 356 364	M5240 M5248 M5356 M5356	E3544 E3545 E3846 E3847	D4206 D4206 D4206 D4207	H4458 H4458 H4458 H4459	P2544 P2545 P2446 P2447	—	MT01A	MF91-A	UY128GAS #14~16
C007JD-W162 /UTP (UTR)	240 248 356 364	M5240 M5248 M5356 M5364	E3544 E3545 E3846 E3847	D4206 D4206 D4206 D4207	H4458 H4458 H4458 H4459	P2544 P2545 P2446 P2447	MH41	MT01A	MF91-A	UY128GAS #14~16
C007JD-U162 /UTQ (UTS)	240 248 356 364	M5240 M5248 M5356 M5356	E3544 E3545 E3846 E3847	D4206 D4206 D4206 D4207	H4458 H4458 H4458 H4459	P2544 P2545 P2446 P2447	—	MT01A	MF01-A	UY128GAS #14~16

註：P2544/2545 為固定式押具舌,亦可使用活動式押具舌 P2565代替P2544/P2545
P2446/2447 為固定式押具舌,亦可使用活動式押具舌 P2466代替P2446/2447

規格件表 CONVERSION CHART-3

規格件表 CONVERSION CHART-4

MODEL 機 型	SUB-CLASS 規 格	NEEDLE CLAMP 針 座	NEEDLE PLATE 針 板	MAIN FEED DOG 主送具	DIFF. FEED DOG 差送具	PRESSER FOOT 押 具	SPREADER 上 叉	LOOPER 勾 針	CAM 偏心凸輪	NEEDLE 針 號
C007JD-W222 /CQ	240 248 356 364	M5240 M5248 M5356 M5364	E 4124P E 4125P E 4426P E 4427P	D 3216 D 3216 D 3216 D 3217	H 3362 H 3362 H 3362 H 3363	P1814 P 1815 P2116 P 2117	MH41	MT01	MF01-A	UY128GAS #10
C007JD-U222 /CQ							—			
C007JD-W222 /CQA/CLA	256	M5356	E2326Q	D2110	H2220Q	P2906Q	MH41	MT01A	MF91-A	TV*5 #14
C007JD-W222 /CQB/CC C007JD-W222 /CQB/CD C007JD-W222 /CQB/CE	248 356 364	M5248 M5356 M5364	E 4125P E 4426P E 4427P	D 3216 D 3216 D 3217	H 3362 H 3362 H 3363	P 1815 P2116 P 2117	MH41	MT01	MF01-A	UY128GAS #10
C007JD-U222 /CQB/CC C007JD-U222 /CQB/CD C007JD-U222 /CQB/CE	248 356 364	M5248 M5356 M5356	E 4125P E 4426P E 4427P	D 3216 D 3216 D 3217	H 3362 H 3362 H 3363	P 2315 P 2616 P 2617	—	MT01	MF01-A	UY128GAS #10
C007JD-W322 /CC	356 364	M5356 M5364	E 2826P E 2827P	D 2107L D 2107L	H 3259M H 3259M	P2456 P2457	MH41	MT01	MF01-A	UY128GAS #10
C007JD-U322 /CC	356 364	M5356 M5364	E 2826P E 2827P	D 2107L D 2107L	H 3259M H 3259M	P2456 P2457	—	MT01	MF01-A	UY128GAS #10
C007JD-W322 CC/UTP(UTR)	356 364	M5356 M5364	E 2826P E 2827P	D 2107L D 2107L	H 3259M H 3259M	P2456 P2457	MH41	MT01	MF01-A	UY128GAS #10
C007JD-U322 CC/UTQ(UTS)	356 364	M5356 M5364	E 2826P E 2827P	D 2107L D 2107L	H 3259M H 3259M	P2456 P2457	—	MT01	MF01-A	UY128GAS #10

*CQB為三合一機型　註：P2544/2545 為固定式押具舌,亦可使用活動式押具舌 P2565代替P2544/P2545
P2446/2447 為固定式押具舌,亦可使用活動式押具舌 P2466代替P2446/2447

MODEL 機 型	SUB-CLASS 規格	NEEDLE CLAMP 針 座	NEEDLE PLATE 針 板	MAIN FEED DOG 主送具	DIFF. FEED DOG 差送具	PRESSER FOOT 押 具	SPREADER 上 叉	LOOPER 勾 針	CAM 偏心凸輪	NEEDLE 針 號
C007JD-W322 /CD	356 364	M5356 M5364	E 3626P E 3627P	D 4206 D 4207	H 4158 H 4159	P2446 P2447	MH41	MT01	MF01-A	UY128GAS #10
C007JD-U322 /CD	356 364	M5356 M5364	E 3626P E 3627P	D 4206 D 4207	H 4158 H 4159	P2446 P2447	—	MT01	MF01-A	UY128GAS #10
C007JD-W322 CD/UTP(UTR)	356 364	M5356 M5364	E 3626P E 3627P	D 4206 D 4207	H 4158 H 4159	P2446 P2447	MH41	MT01	MF01-A	UY128GAS #10
C007JD-U322 CD/UTQ(UTS)	356 364	M5356 M5364	E 3626P E 3627P	D 4206 D 4207	H 4158 H 4159	P2446 P2447	—	MT01	MF01-A	UY128GAS #10
C007JD-W322 /CE	356 364	M5356 M5364	E 2626P E 2627P	D 2107	H 3159	P2456 P2457	MH41	MT01	MF01-A	UY128GAS #10
C007JD-U322 /CE	356 364	M5356 M5364	E 2626P E 2627P	D 2107	H 3159	P2456 P2457	—	MT01	MF01-A	UY128GAS #10
C007JD- W322 CE/UTP(UTR)	356 364	M5356 M5364	E 2626P E 2627P	D 2107	H 3159	P2456 P2457	MH41	MT01	MF01-A	UY128GAS #10
C007JD- U322 CE/UTQ(UTS)	356 364	M5356 M5364	E 2626P E 2627P	D 2107	H 3159	P2456 P2457	—	MT01	MF01-A	UY128GAS #10
C007JD- U322 /CF	248	M5348	E 2625P	D 2106	H 3158	P2555P	—	MT01	MF01-A	UY128GAS #10
C007JD-U322 CF/UTQ(UTS)	248	M5348	E 2625P	D 2106	H 3158	P2555P	—	MT01	MF01-A	UY128GAS #10

註：P2544/2545 為固定式押具舌,亦可使用活動式押具舌 P2565代替P2544/P2545
P2446/2447 為固定式押具舌,亦可使用活動式押具舌 P2466代替P2446/2447

規格件表 CONVERSION CHART-5

規格件表 CONVERSION CHART-6

MODEL 機 型	SUB-CLASS 規 格	NEEDLE CLAMP 針 座	NEEDLE PLATE 針 板	MAIN FEED DOG 主送具	DIFF. FEED DOG 差送具	PRESSER FOOT 押 具	SPREADER 上 叉	LOOPER 勾 針	CAM 偏心凸輪	NEEDLE 針 號
C007JD- W512 /FE	240 356 364	M5240 M5356 M5364	E 3524R E 3826R E 3827R	D 4206 D 4206 D 4207	H 4458 H 4458 H 4459	P2914 P3216 P3217	MH41	MT01	MF01-A	UY128GAS #10
C007JD- U512 /FE	240 356 364	M5240 M5356 M5364	E 3524R E 3826R E 3827R	D 4206 D 4206 D 4207	H 4458 H 4458 H 4459	P3414 P3716 P3717	—	MT01	MF01-A	UY128GAS #10
C007JD-W522 /FE/CR/CL	356 364	M5356 M5364	E 6426R E 6427R	D 3222	H 3268	P3816R P3817R	MH41	MT01	MF01-A	UY128GAS #10
C007JD-U522 /FE/CR/CL	356 364	M5356 M5364	E 6426R E 6427R	D 3222	H 3268	P3816R P3817R	—	MT01	MF01-A	UY128GAS #10
C007JD-W532/ CR/UTP/CL/RLP/CX	356 364	M5356 M5364	E 6426R E 6427R	D 3222	H 3268	P3816R P3817R	MH41	MT01	MF01-A	UY128GAS #10
C007JD-U532/ CR/UTQ/CL/RLP/CX	356 364	M5356 M5364	E 6426R E 6427R	D 3222	H 3268	P3816R P3817R	MH41	MT01	MF01-A	UY128GAS #10
C007J-W922/ CW	456 464	M5456 M5464	E1828P E1848P	D2107M	H4459M	P2428P P2448P	MH41	MT01B	MF01-A	SM1014B#10 (MY1014B#70,SY7256)

註：C007JD不可加裝 FFC

MODEL 機 型	SUB-CLASS 規 格	NEEDLE CLAMP 針 座	NEEDLE PLATE 針 板	MAIN FEED DOG 主送具	DIFF. FEED DOG 差送具	PRESSER FOOT 押 具	SPREADER 上 叉	LOOPER 勾 針	CAM 偏心凸輪	NEEDLE 針 號
C007JD-W811 /CRL/RL	248 356 364	M5248 M5356 M5364	E 0235R E 0236R E 0237R	D2101Q	H2203R	P2765 P2766 P2767	MH41	MT01	MF91-A	UY128GAS #10
C007JD-W811A /CRL/RL	248 356 364	M5248 M5356 M5364	E 0235Q E 0236Q E 0237Q	D2101Q	H2203Q	P2765 P2766 P2767	MH41	MT01	MF91-A	UY128GAS #10
C007JD- U811 /CRL/RL	248 356 364	M5248 M5356 M5364	E 0235R E 0236R E 0237R	D2101Q	H2203R	P0965 P0966 P0967	—	MT01	MF91-A	UY128GAS #10
C007JD- U811A /CRL/RL	248 356 364	M5248 M5356 M5364	E 0235Q E 0236Q E 0237Q	D2101Q	H2203Q	P0965 P0966 P0967	—	MT01	MF91-A	UY128GAS #10
C007JD-W812 /CRL/RL	248 356 364	M5248 M5356 M5364	E 0225R E 0226R E 0227R	D2101Q	H2203R	P2765 P2766 P2767	MH41	MT01	MF91-A	UY128GAS #10
C007JD-W812A /CRL/RL	248 356 364	M5248 M5356 M5364	E 0225Q E 0226Q E 0227Q	D2101Q	H2203Q	P2765 P2766 P2767	MH41	MT01	MF91-A	UY128GAS #10
C007JD- U812 /CRL/RL	248 356 364	M5248 M5356 M5364	E 0225R E 0226R E 0227R	D2101Q	H2203R	P0965 P0966 P0967	—	MT01	MF91-A	UY128GAS #10
C007JD- U812A /CRL/RL	248 356 364	M5248 M5356 M5364	E 0225Q E 0226Q E 0227Q	D2101Q	H2203Q	P0966 P0967	—	MT01	MF91-A	UY128GAS #10
C007JD- W812 CRL/UTP/RL	248 356 364	M5248 M5356 M5364	E 0225R E 0226R E 0227R	D2101Q	H2203R	P2765 P2766 P2767	MH41	MT01	MF91-A	UY128GAS #10
C007JD- W812A CRL/UTP/RL	248 356 364	M5248 M5356 M5364	E 0225Q E 0226Q E 0227Q	D2101Q	H2203Q	P2765 P2766 P2767	MH41	MT01	MF91-A	UY128GAS #10
C007JD- U812 CRL/UTQ/RL	248 356 364	M5248 M5356 M5364	E 0225R E 0226R E 0227R	D2101Q	H2203R	P0965 P0966 P0967	—	MT01	MF91-A	UY128GAS #10
C007JD- U812A CRL/UTQ/RL	248 356 364	M5248 M5356 M5364	E 0225Q E 0226Q E 0227Q	D2101Q	H2203Q	P0965 P0966 P0967	—	MT01	MF91-A	UY128GAS #10

註：C007JD-W812A/W813A 機型之針板與差送具為5排齒. C007JD-W812/W813 機型之針板與差送具為4排齒.

規格件表 CONVERSION CHART-7

規格件表 CONVERSION CHART-8

MODEL 機 型	SUB-CLASS 規 格	NEEDLE CLAMP 針 座	NEEDLE PLATE 針 板	MAIN FEED DOG 主送具	DIFF. FEED DOG 差送具	PRESSER FOOT 押 具	SPREADER 上 叉	LOOPER 勾 針	CAM 偏心凸輪	NEEDLE 針 號
C007JD-W812 /CRL/UTR/CSB	248 356 364	M5248 M5356 M5364	E 0225R E 0226R E 0227R	D2101Q	H2203R	P2765 P2766 P2767	MH41	MT01	MF91-A	UY128GAS #10
C007JD-W812A /CRL/UTR/CSB	248 356 364	M5248 M5356 M5364	E 0225Q E 0226Q E 0227Q	D2101Q	H2203Q	P2765 P2766 P2767	MH41	MT01	MF91-A	UY128GAS #10
C007JD-U812 /CRL/UTS/CSB	248 356 364	M5248 M5356 M5364	E 0225R E 0226R E 0227R	D2101Q	H2203R	P0965 P0966 P0967	MH41	MT01	MF91-A	UY128GAS #10
C007JD-U812A /CRL/UTS/CSB	248 356 364	M5248 M5356 M5364	E 0225Q E 0226Q E 0227Q	D2101Q	H2203Q	P0965 P0966 P0967	MH41	MT01	MF91-A	UY128GAS #10
C007JD-W813 /CRL/RL	248 356 364	M5248 M5356 M5364	E 0215R E 0216R E 0217R	D2101Q	H2203R	P2765 P2766 P2767	MH41	MT01	MF91-A	UY128GAS #10
C007JD-W813A /CRL/RL	248 356 364	M5248 M5356 M5364	E 0215Q E 0216Q E 0217Q	D2101Q	H2203Q	P2765 P2766 P2767	MH41	MT01	MF91-A	UY128GAS #10
C007JD-U813 /CRL/RL	248 356 364	M5248 M5356 M5364	E 0215R E 0216R E 0217R	D2101Q	H2203R	P0965 P0966 P0967	—	MT01	MF91-A	UY128GAS #10
C007JD-U813A /CRL/RL	248 356 364	M5248 M5356 M5364	E 0215Q E 0216Q E 0217Q	D2101Q	H2203Q	P0965 P0966 P0967	—	MT01	MF91-A	UY128GAS #10
C007JD-W813 CRL/UTP/RL	248 356 364	M5248 M5356 M5364	E 0215R E 0216R E 0217R	D2101Q	H2203R	P2765 P2766 P2767	MH41	MT01	MF91-A	UY128GAS #10
C007JD-W813A CRL/UTP/RL	248 356 364	M5248 M5356 M5364	E 0215Q E 0216Q E 0217Q	D2101Q	H2203Q	P2765 P2766 P2767	MH41	MT01	MF91-A	UY128GAS #10
C007JD-U813 CRL/UTQ/RL	248 356 364	M5248 M5356 M5364	E 0215R E 0216R E 0217R	D2101Q	H2203R	P0965 P0966 P0967	—	MT01	MF91-A	UY128GAS #10
C007JD-U813A CRL/UTQ/RL	248 356 364	M5248 M5356 M5364	E 0215Q E 0216Q E 0217Q	D2101Q	H2203Q	P0965 P0966 P0967	—	MT01	MF91-A	UY128GAS #10

註：C007JD-W812A/W813A 機型之針板與差送具為 5 排齒. C007JD-W812/W813 機型之針板與差送具為 4 排齒.

MODEL 機 型	SUB-CLASS 規 格	NEEDLE CLAMP 針 座	NEEDLE PLATE 針 板	MAIN FEED DOG 主送具	DIFF. FEED DOG 差送具	PRESSER FOOT 押 具	SPREADER 上 叉	LOOPER 勾 針	CAM 偏心凸輪	NEEDLE 針 號
C007JD-W813 /CRL/UTR/CSB	248 356 364	M5248 M5356 M5364	E0235R E0236R E0237R	D2101Q	H2203R	P2765 P2766 P2767	MH41	MT01	MF91-A	UY128GAS #10
C007JD-W813A /CRL/UTR/CSB	248 356 364	M5248 M5356 M5364	E0235Q E0236Q E0237Q	D2101Q	H2203Q	P2765 P2766 P2767	MH41	MT01	MF91-A	UY128GAS #10
C007JD-U813 /CRL/UTS/CSB	248 356 364	M5248 M5356 M5364	E0235R E0236R E0237R	D2101Q	H2203R	P0965 P0966 P0967	MH41	MT01	MF91-A	UY128GAS #10
C007JD-U813A /CRL/UTS/CSB	248 356 364	M5248 M5356 M5364	E0235Q E0236Q E0237Q	D2101Q	H2203Q	P0965 P0966 P0967	MH41	MT01	MF91-A	UY128GAS #10
C007JD-W822 /CRL/CY/CL/RL	248 356 364	M5248 M5356 M5364	E0225R E0226R E0227R	D2101Q	H2203R	P2765 P2766 P2767	MH41	MT01	MF91-A	UY128GAS #10
C007JD-W823 /CRL/CY/CL/RL	248 356 364	M5248 M5356 M5364	E0235R E0236R E0237R	D2101Q	H2203R	P2765 P2766 P2767	MH41	MT01	MF91-A	UY128GAS #10
C007JD-U822 /CRL/CY/CL/RL	248 356 364	M5248 M5356 M5364	E0225R E0226R E0227R	D2101Q	H2203R	P0965 P0966 P0967	—	MT01	MF91-A	UY128GAS #10
C007JD-U823 /CRL/CY/CL/RL	248 356 364	M5248 M5356 M5364	E0235R E0236R E0237R	D2101Q	H2203R	P0965 P0966 P0967	—	MT01	MF91-A	UY128GAS #10
C007JD-W822 CRL/CY/UTP/CL/RL	248 356 364	M5248 M5356 M5364	E0225R E0226R E0227R	D2101Q	H2203R	P2765 P2766 P2767	MH41	MT01	MF91-A	UY128GAS #10
C007JD-W823 CRL/CY/UTP/CL/RL	248 356 364	M5248 M5356 M5364	E0235R E0236R E0237R	D2101Q	H2203R	P2765 P2766 P2767	MH41	MT01	MF91-A	UY128GAS #10

註：C007JD-W812A/W813A 機型之針板與差送具為 5 排齒.
C007JD-W812/W813 機型之針板與差送具為 4 排齒.

規格件表 CONVERSION CHART-9

規格件表 CONVERSION CHART-10

MODEL	SUB-CLASS	NEEDLE CLAMP	NEEDLE PLATE	MAIN FEED DOG	DIFF. FEED DOG	PRESSER FOOT	SPREADER	LOOPER	CAM	NEEDLE
機 型	規 格	針 座	針 板	主送具	差送具	押 具	上 叉	勾 針	偏心凸輪	針 號
C007JD-U822 CRL/CY/UTQ/CL/RL	248 356 364	M5248 M5356 M5364	E0225R E0226R E0227R	D2101Q	H2203R	P0965 P0966 P0967	—	MT01	MF91-A	UY128GAS #10
C007JD-U823 CRL/CY/UTQ/CL/RL	248 356 364	M5248 M5356 M5364	E0235R E0236R E0237R	D2101Q	H2203R	P0965 P0966 P0967	—	MT01	MF91-A	UY128GAS #10
C007JD-U822 CRL/CY/UTQ/CL/RL	248 356 364	M5248 M5356 M5364	E0225R E0226R E0227R	D2101Q	H2203R	P0965 P0966 P0967	—	MT01	MF91-A	UY128GAS #10
C007JD-U823 CRL/CY/UTQ/CL/RL	248 356 364	M5248 M5356 M5364	E0235R E0236R E0237R	D2101Q	H2203R	P0965 P0966 P0967	—	MT01	MF91-A	UY128GAS #10

註： C007J-W/U122A- 356/364 /CH 時， 增加 CE04-A

C007JD-W/U322A- 356/364 /CC 時，該針板與送金改用 C007JD-W/U122- 356/364 之針板與送金

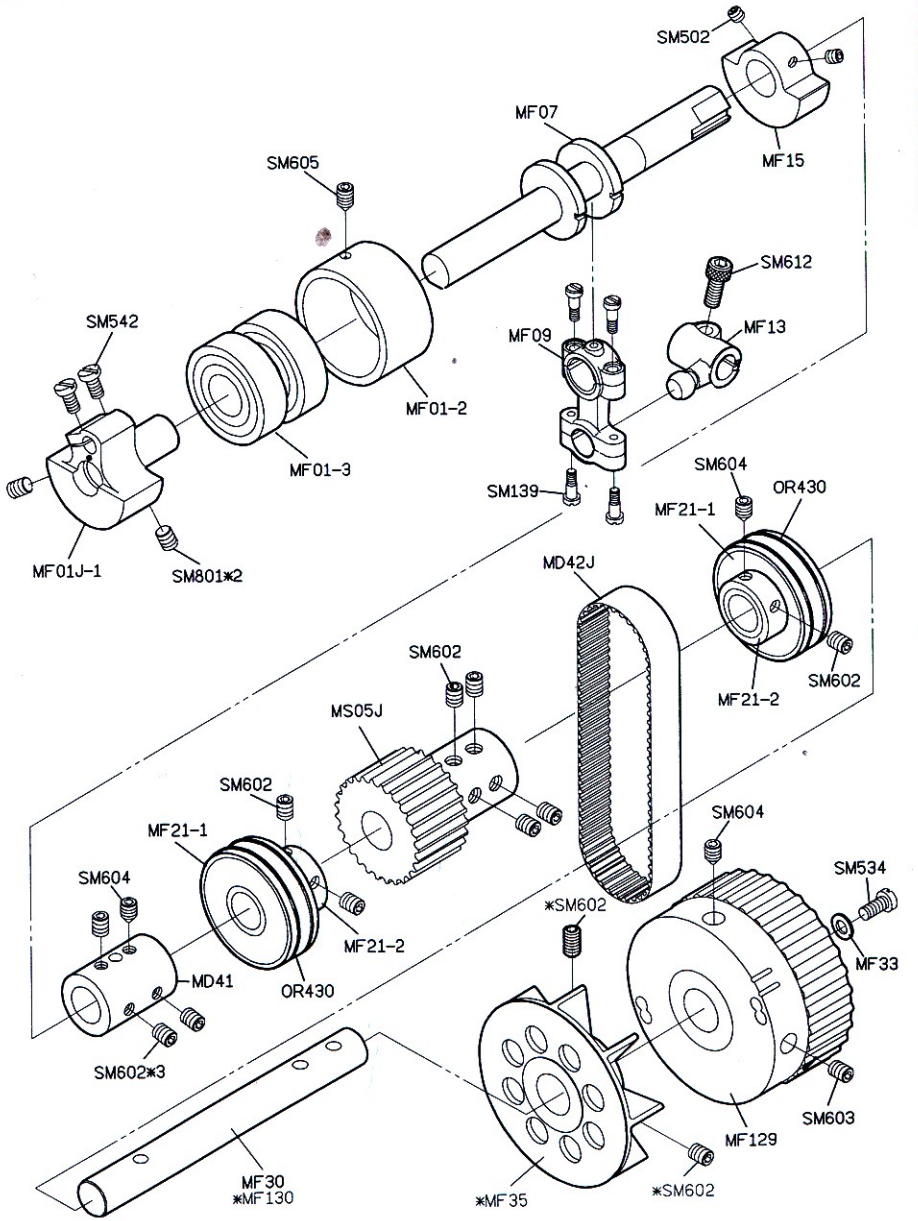

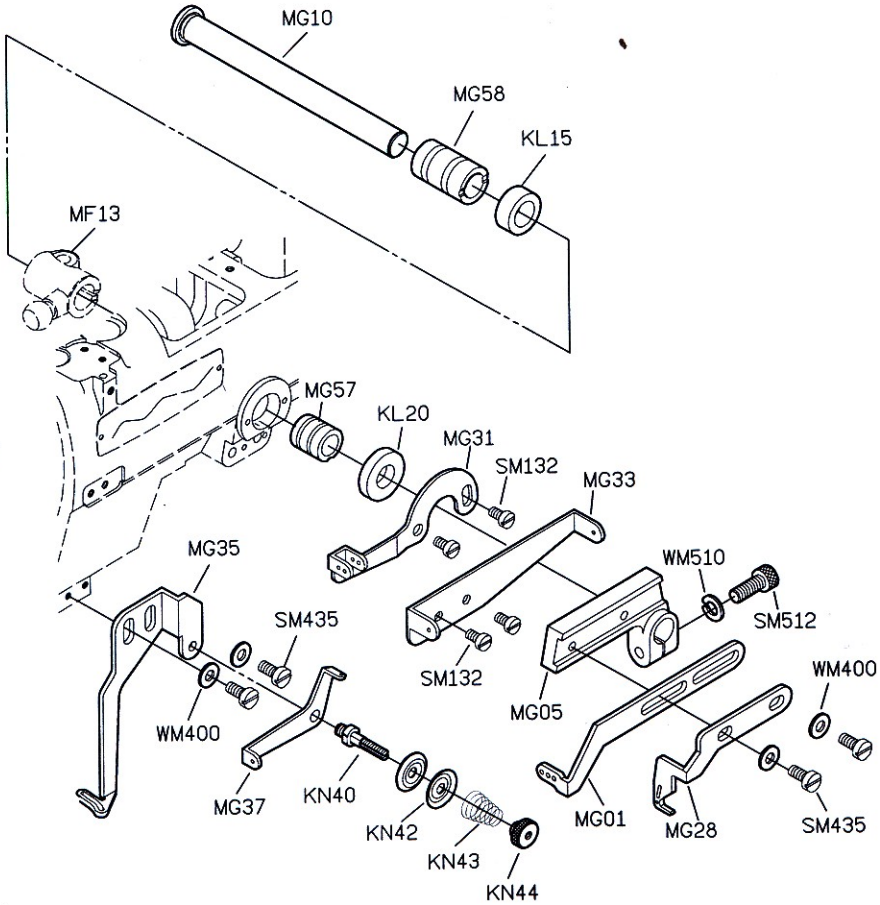

PARTS LIST FOR MF GROUP

PARTS LIST FOR MG GROUP

PARTS LIST FOR MH GROUP

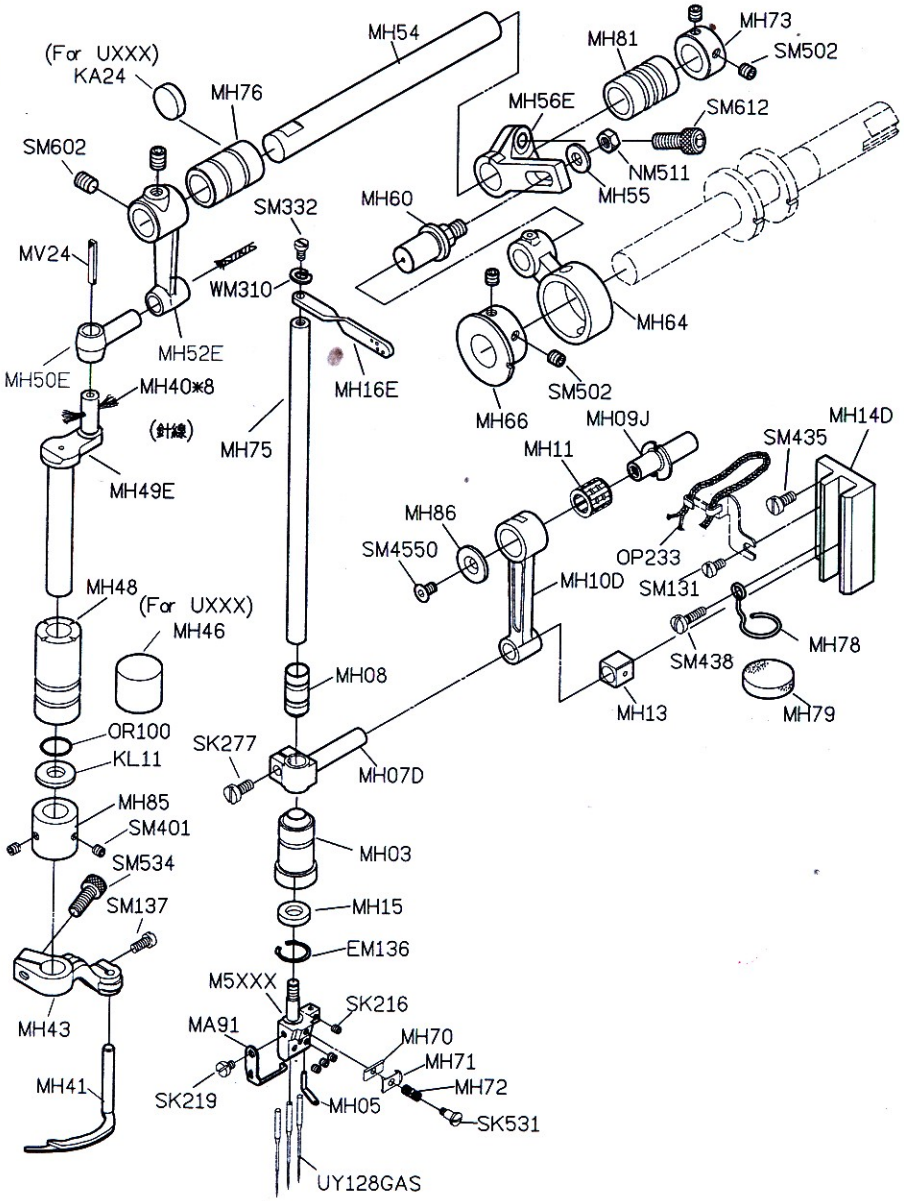

PARTS LIST FOR MJ GROUP

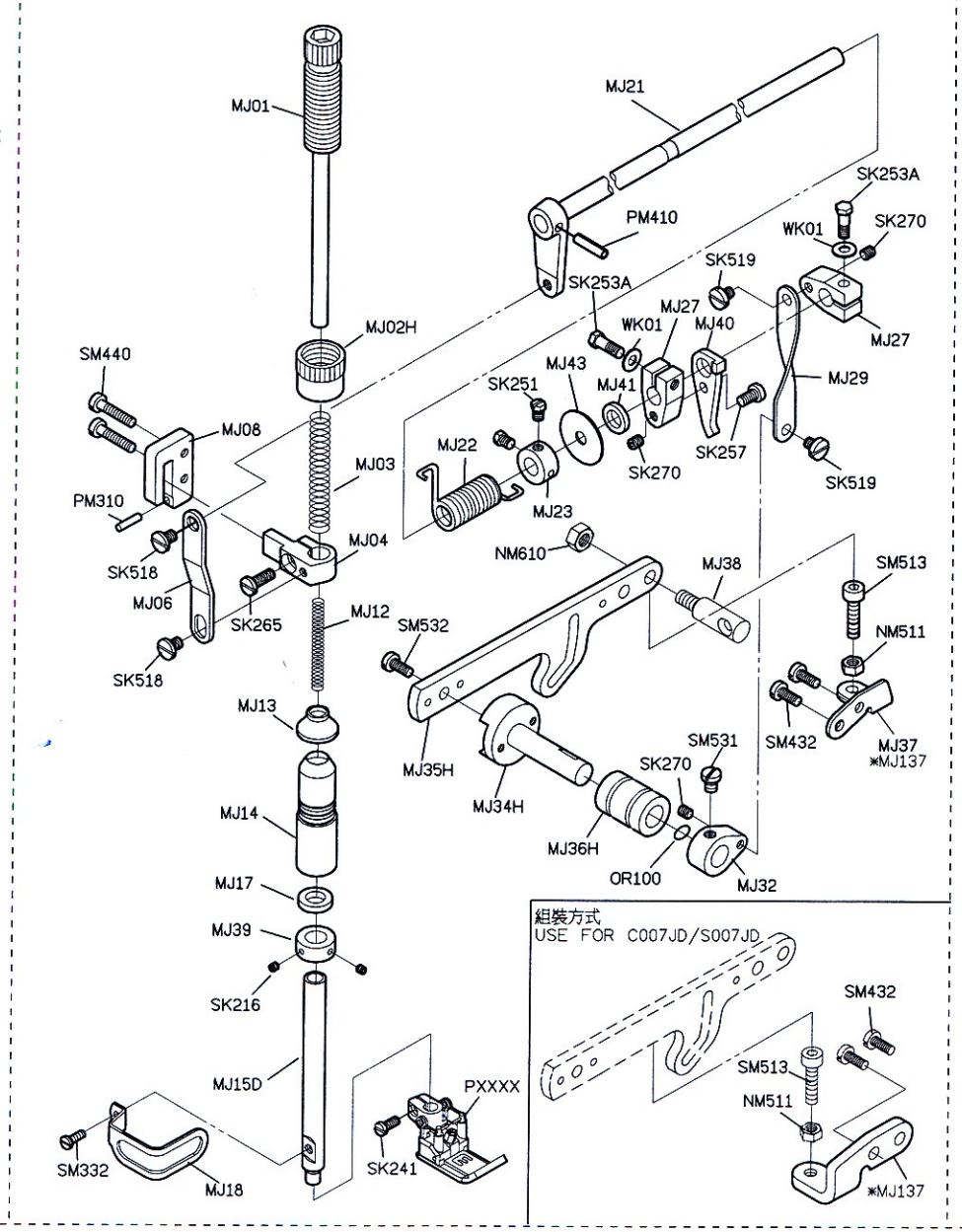

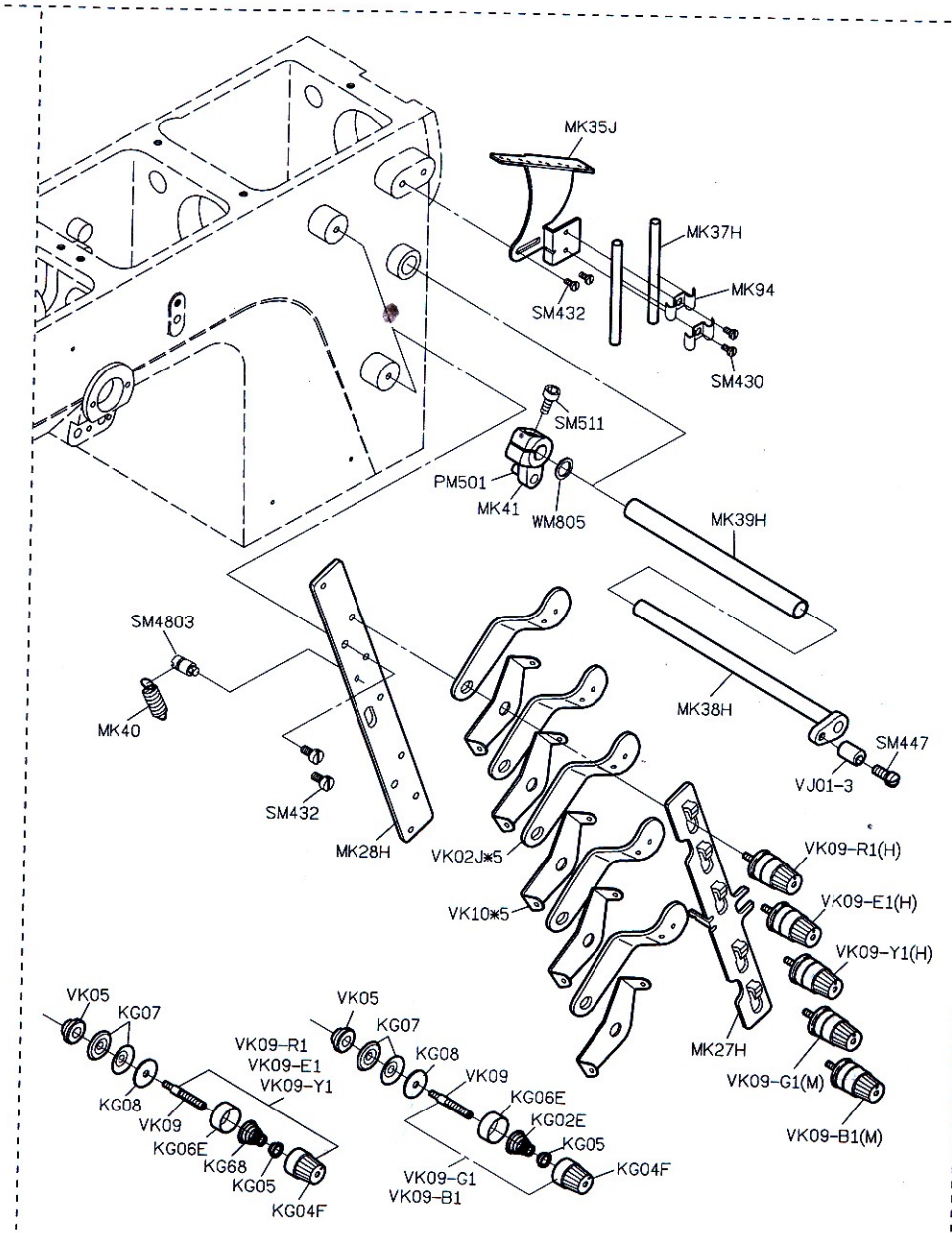
MK35J
MK37H
MK94
SM432
SM430
SM511
PM501
MK41
WM805
MK39H
SM4803
MK40
MK38H
SM447
VJ01-3
SM432
MK28H
VK02J*5
VK09-R1(H)
VK10*5
VK09-E1(H)
VK09-Y1(H)
MK27H
VK09-G1(M)
VK09-B1(M)
VK05
KG07
KG08
VK09
KG06E
KG68
KG05
KG04F
VK09-R1
VK09-E1
VK09-Y1
VK05
KG07
KG08
VK09
KG06E
KG02E
KG05
KG04F
VK09-G1
VK09-B1

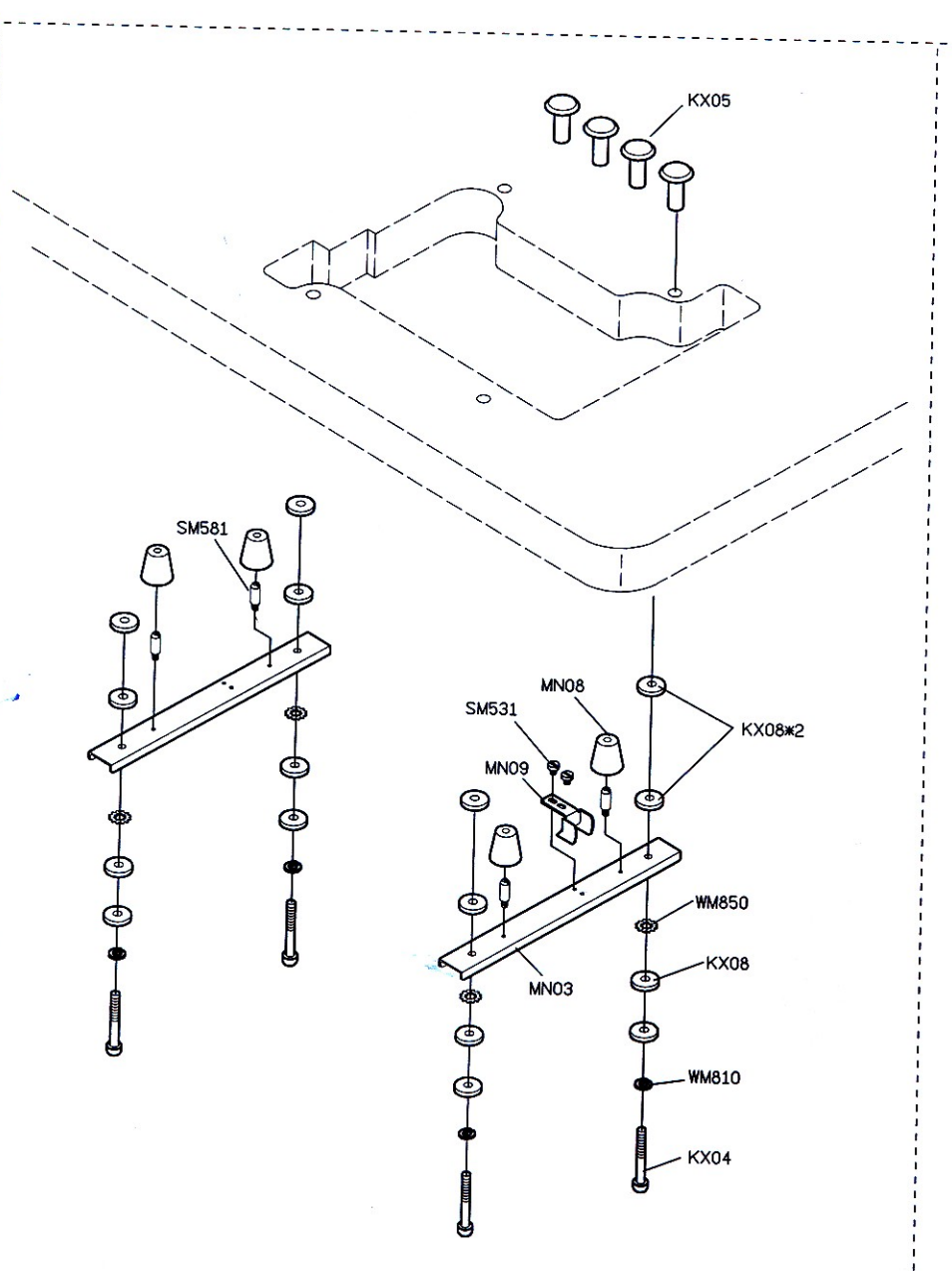
KX05
SM581
MN08
SM531
KX08*2
MN09
WM850
KX08
MN03
WM810
KX04

PARTS LIST FOR MN GROUP

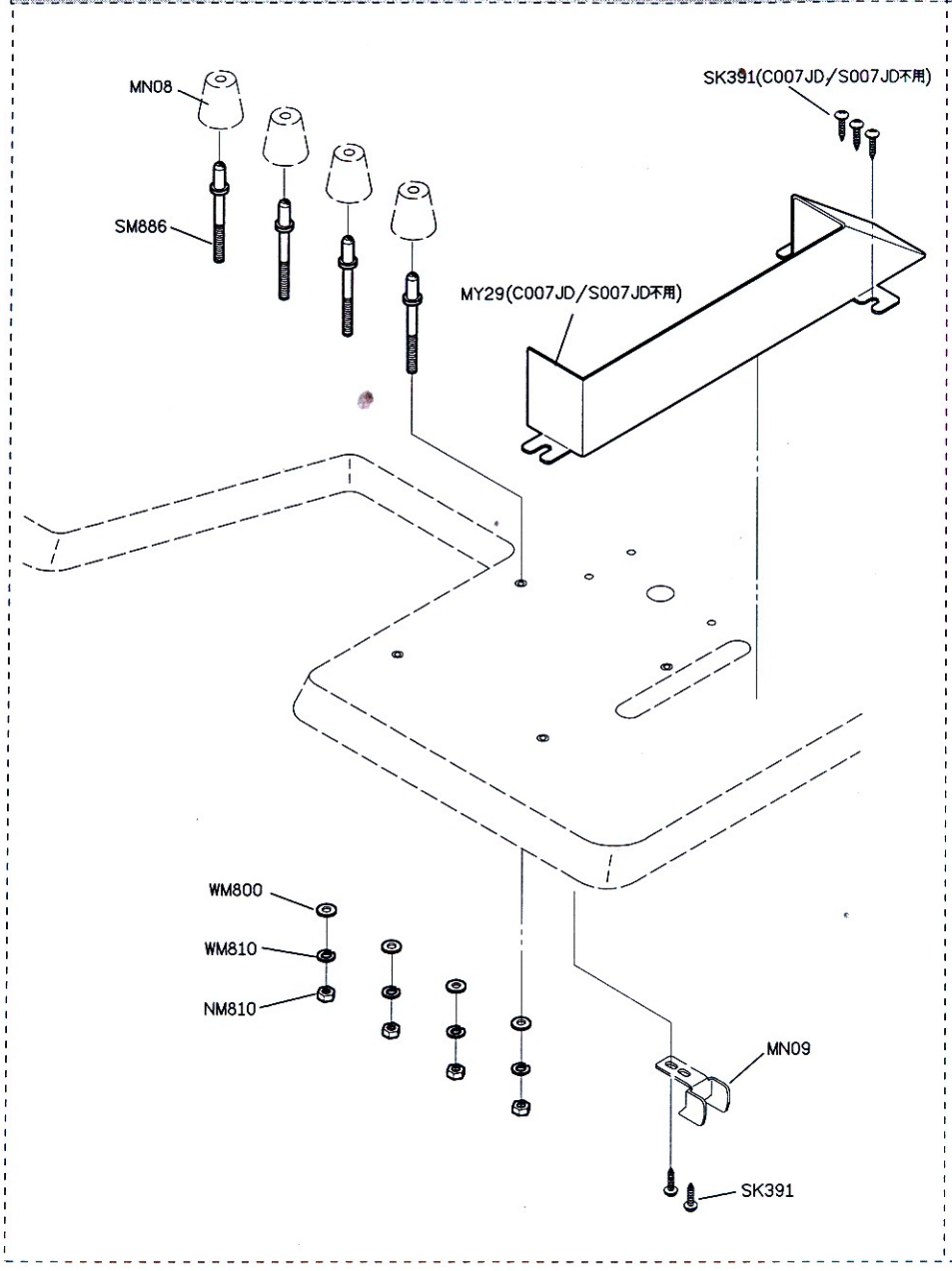

PARTS LIST FOR MQ GROUP

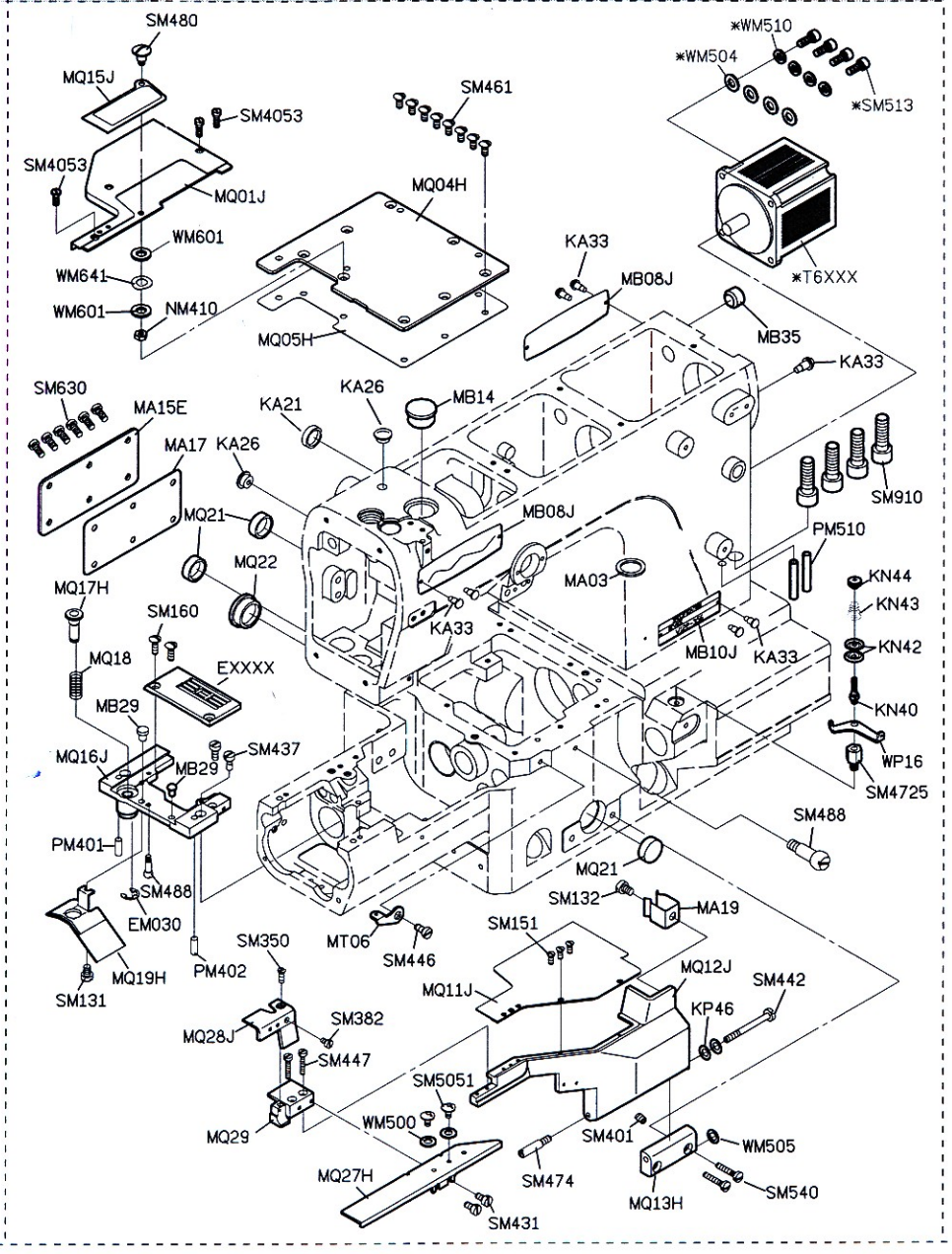

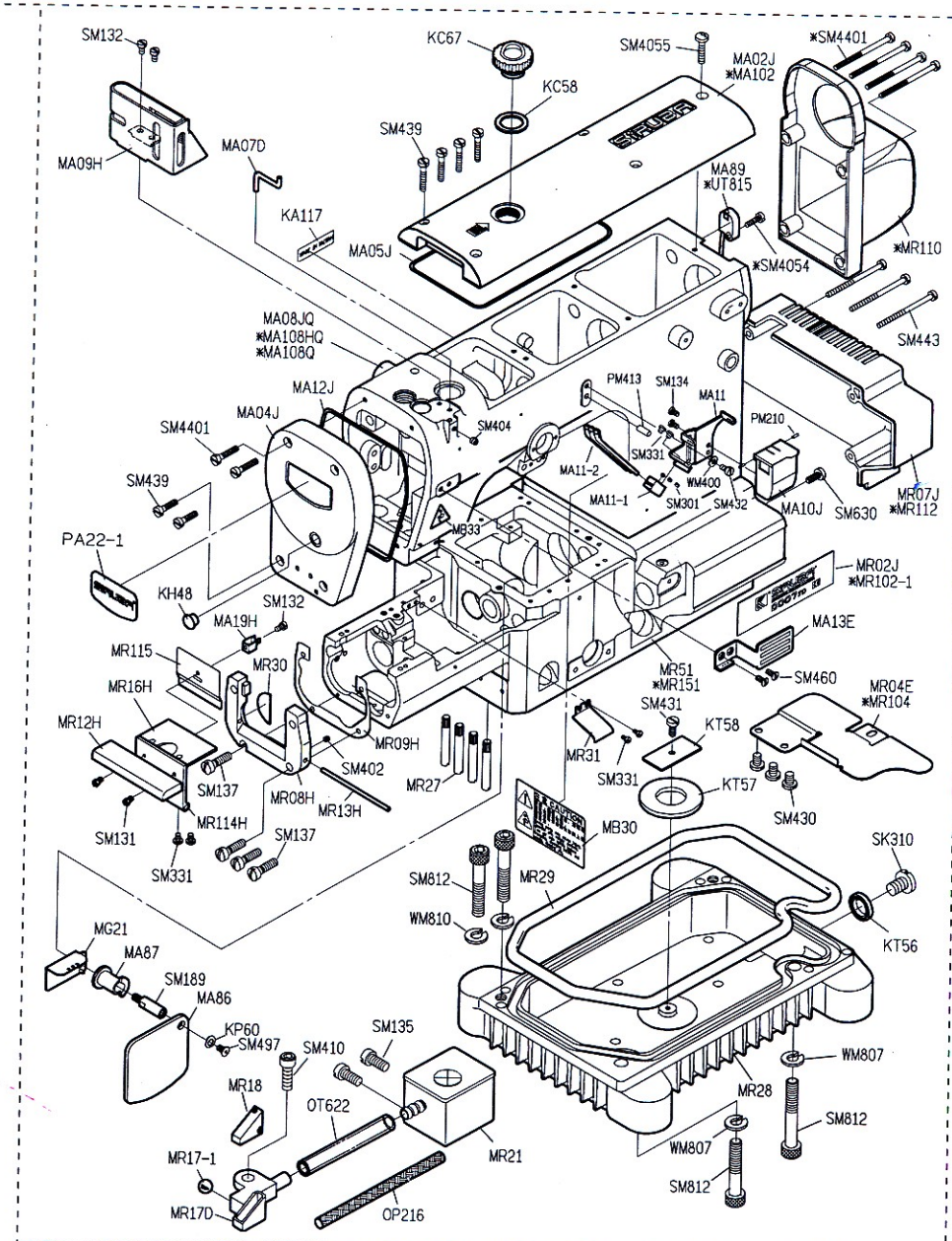

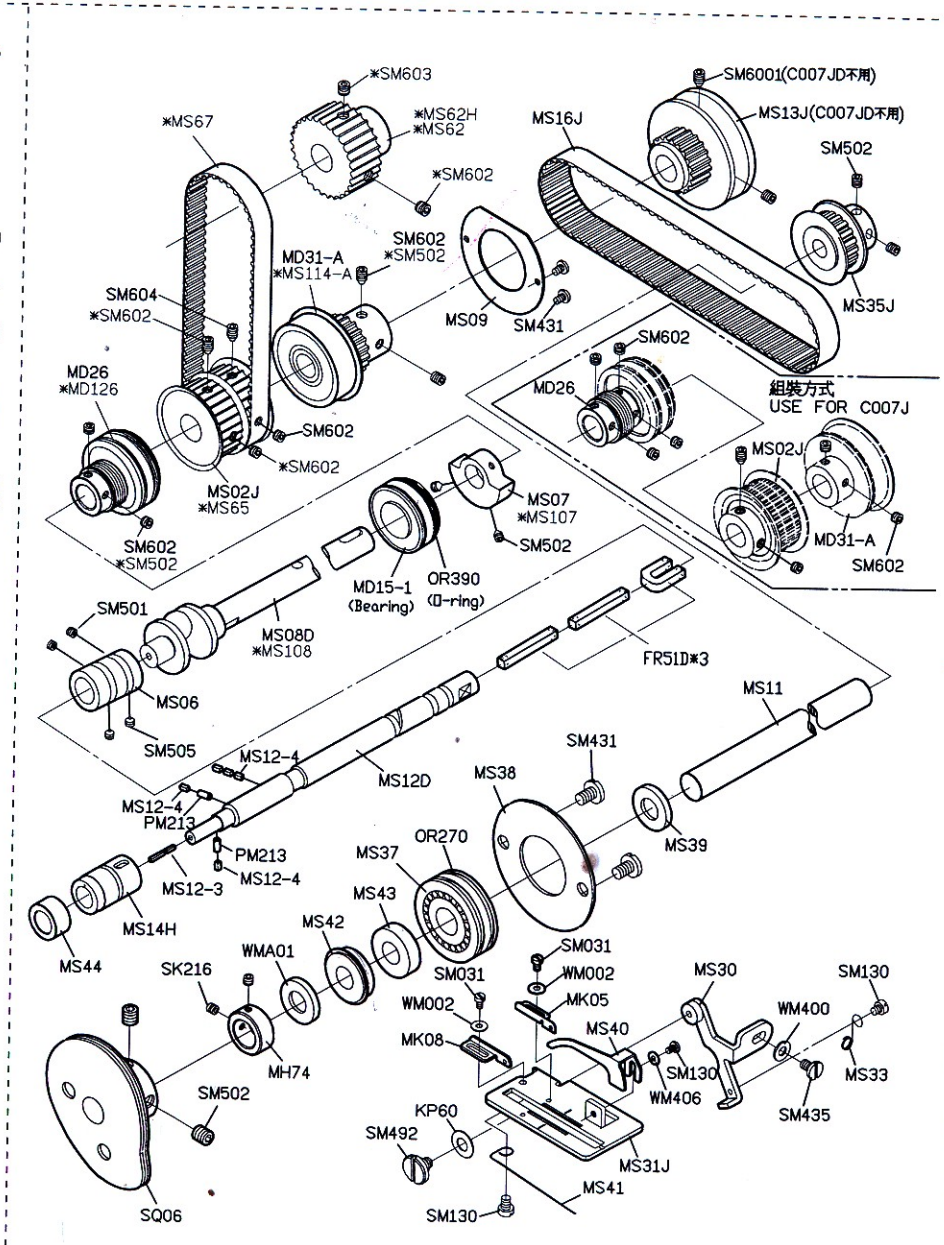

PARTS LIST FOR MR GROUP

PARTS LIST FOR MS GROUP

PARTS LIST FOR MT GROUP

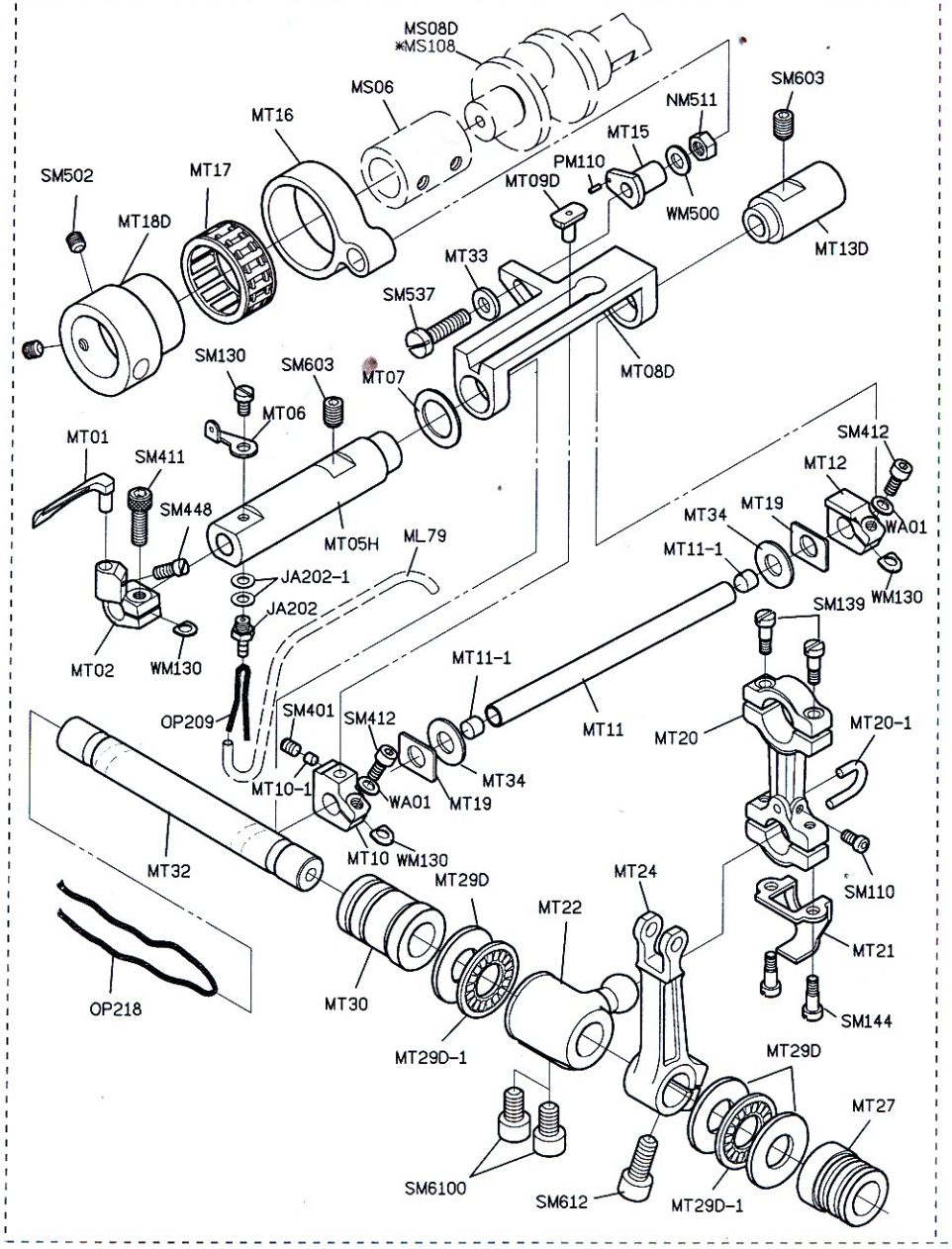

PARTS LIST FOR MU GROUP

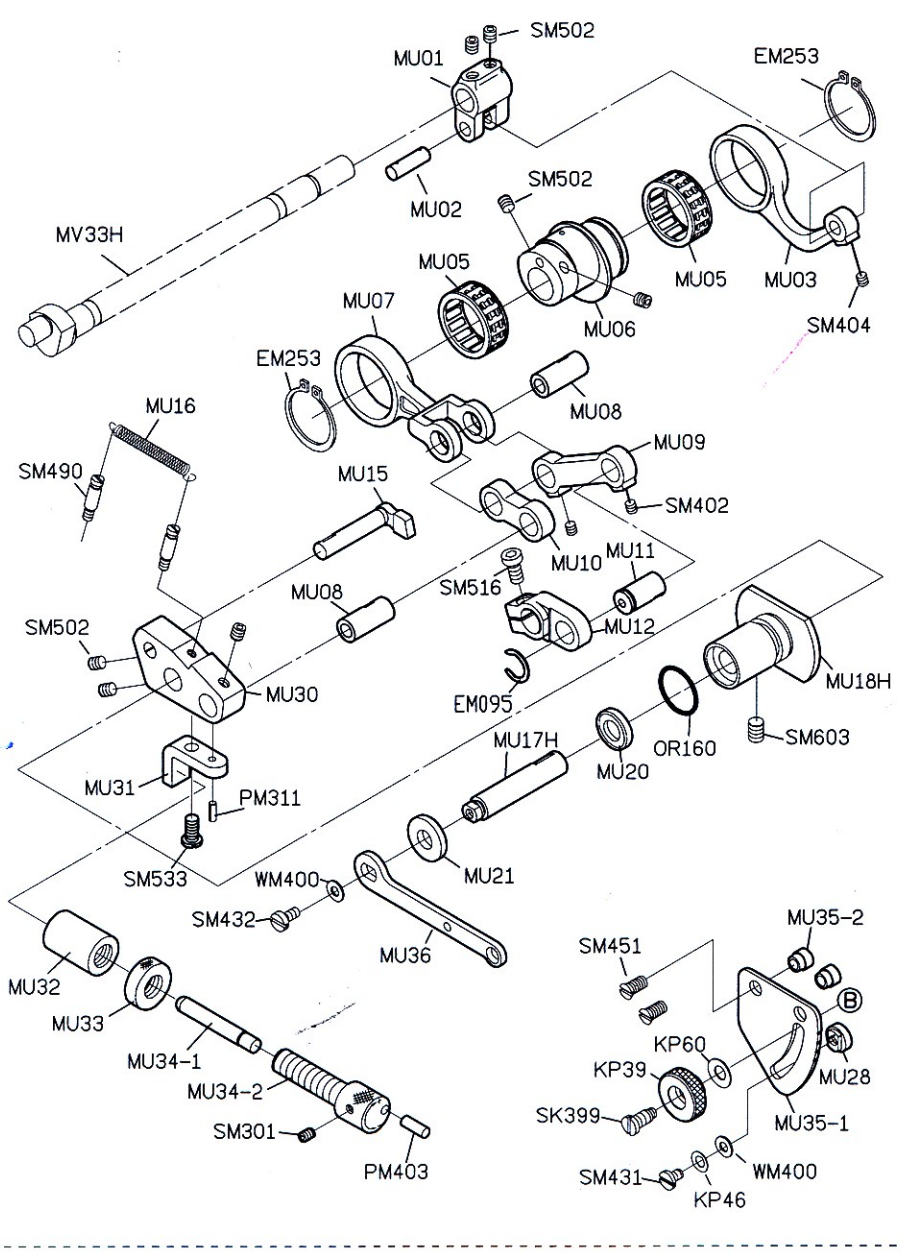

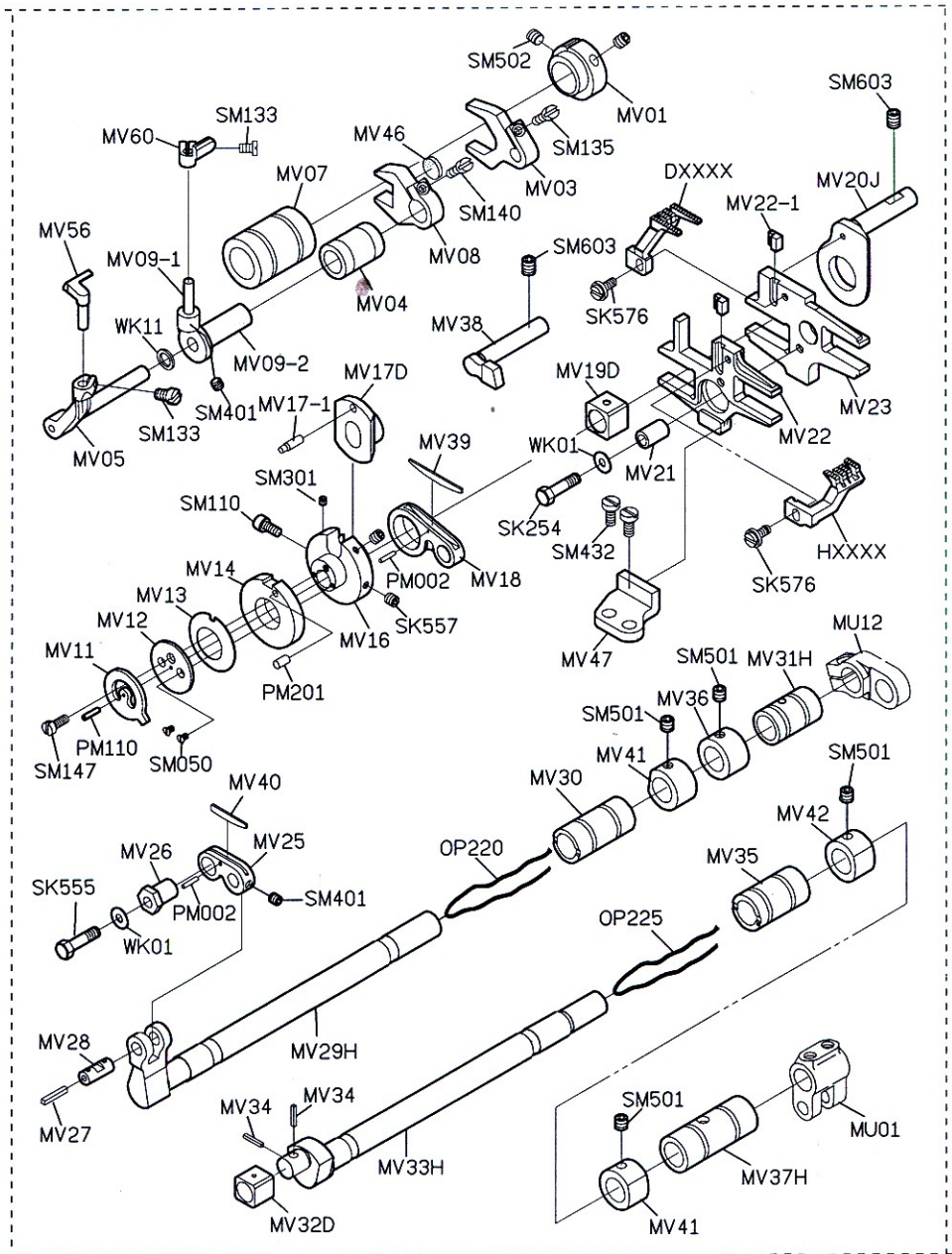

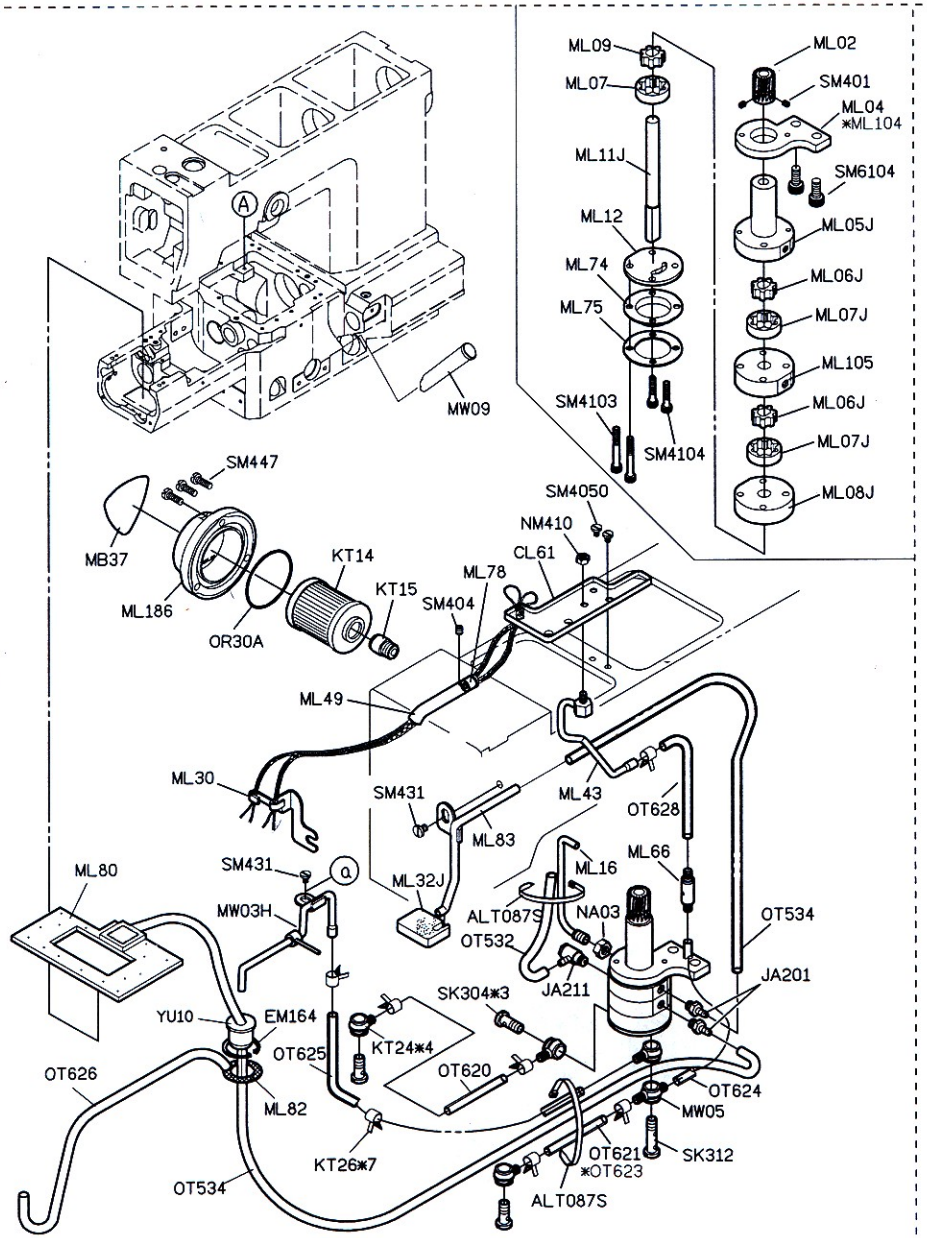

PARTS LIST FOR MV GROUP

PARTS LIST FOR MW GROUP

PARTS LIST FOR MY GROUP

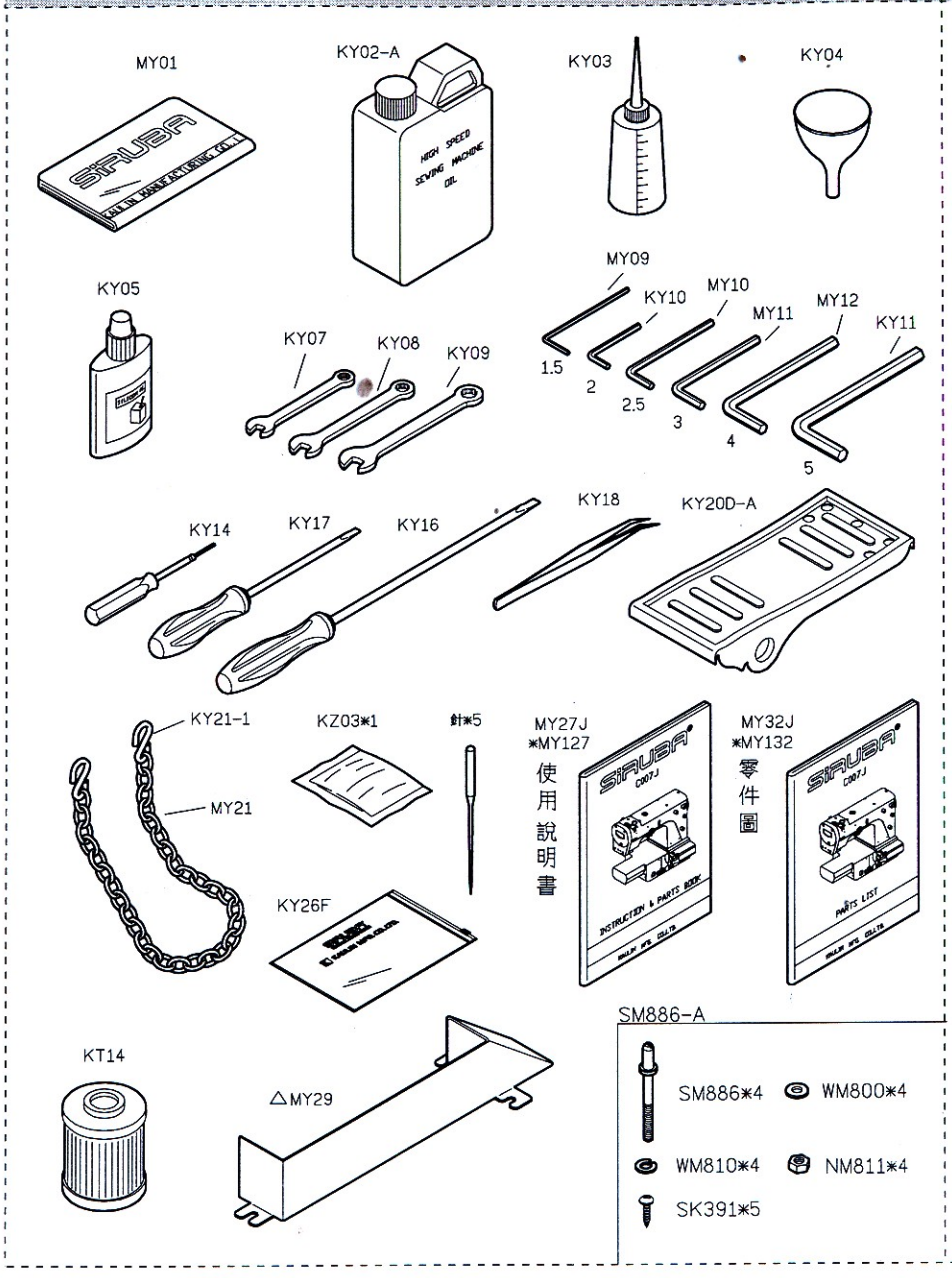
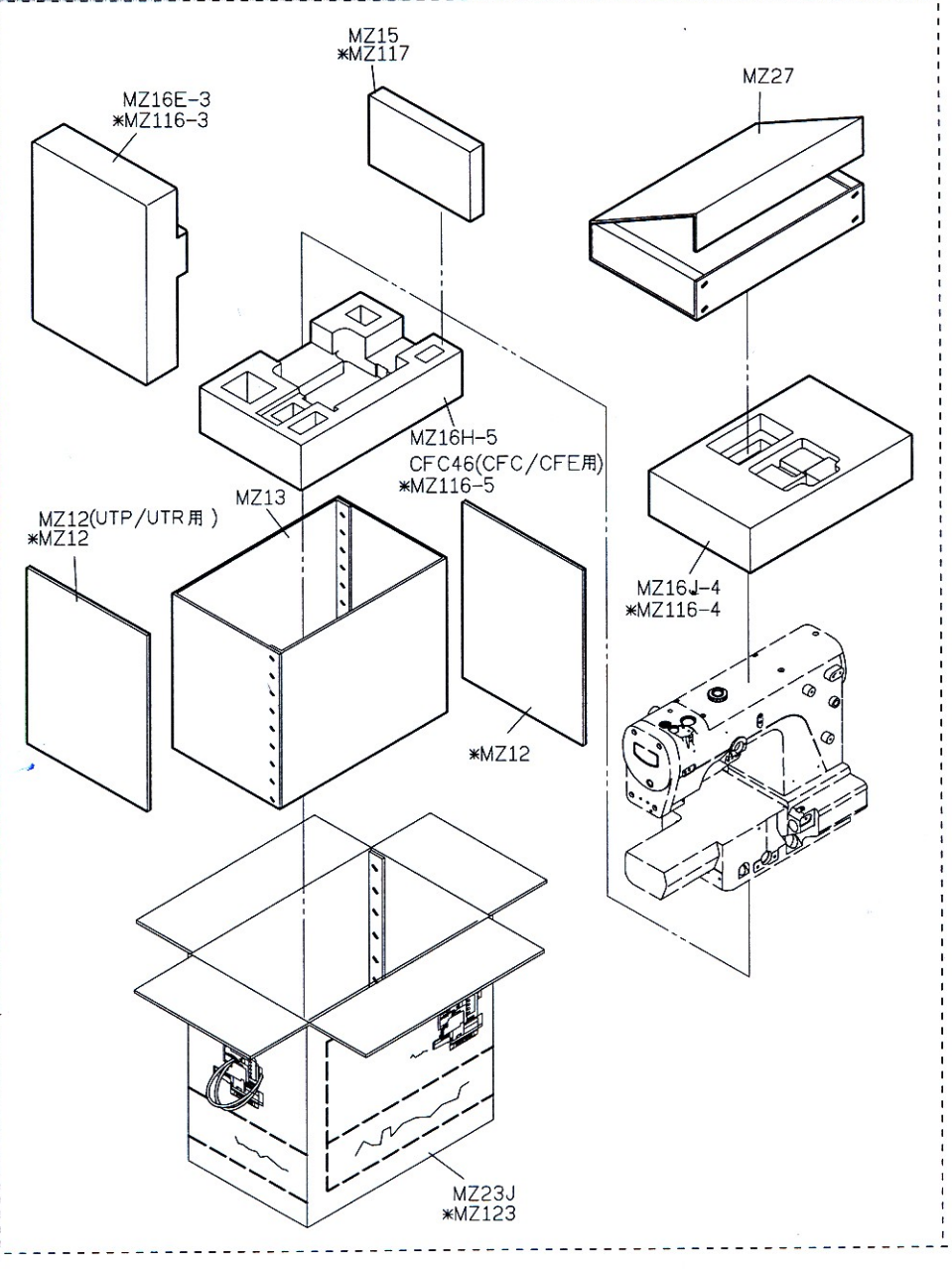
PARTS LIST FOR MZ GROUP